SONAS

BATHROOMS **REIMAGINED**

2024

Northern Ireland

Edition 1

sonasbathrooms.com

SONAS

BATHROOMS **REIMAGINED**

Ireland's Leading Provider
of Quality Bathroom Products

Combining style and performance, we're here to help you create your perfect bathroom. For over 45 years, we've been carefully curating beautiful bathroom product collections. Whether you're after the latest design trend or a timeless look, all our products are fully supported. Our dedicated After Sales and Technical Support Team are always available to provide you with quality assurance and peace of mind.

PLANNING
YOUR BATHROOM

Here at SONAS, we understand that undertaking a bathroom project can be a little daunting. So, we've outlined five simple steps to help you get started and to reimagine your dream bathroom!

1 Research and Inspiration

Before diving into your bathroom project, take the time to do thorough research and gather inspiration. Exploring various sources of inspiration will not only help you reimagine your dream bathroom but also provide valuable insights into the latest trends and design ideas. Start by browsing home improvement magazines, websites, and social media platforms that showcase stunning bathroom renovations. Our Styled by SONAS magazine will give you some great ideas on the latest design trends.

2 Colour

Look for different colour schemes, fixtures, materials, and layout arrangements that catch your eye. Pay attention to the overall mood and ambiance created by various colour combinations. Colours play a pivotal role in bathroom design, setting the tone and atmosphere.

Lighter colours, such as whites and pastels, create an airy and tranquil feel, ideal for small bathrooms or those lacking natural light. On the other hand, bolder colours like deep blues or rich jewel tones can add a touch of drama and sophistication to larger spaces. Consider the colour psychology behind different shades as you choose your bathroom's colour palette. Warm tones evoke a cosy and welcoming vibe, while cooler hues like blues and greens promote relaxation and serenity.

Additionally, explore the use of contrasting colours or complementary colour schemes to add visual interest to your bathroom. For instance, pairing soft blues with warm wooden accents can create a striking and modern aesthetic.

Pay attention to the colours of fixtures and accessories as well. Consider the finishes of taps, accessories and radiators and how they interact with your chosen palette.

3 Design and Layout

Design and layout are significant aspects of any bathroom renovation project. Consider the size and shape of your bathroom and explore various layout options to optimise the available space. Think about the practicality of fixtures, placement of storage, and the flow of movement within the room.

Choose a design that reflects your personal style while maintaining functionality. Remember, simplicity is key. Focus on timeless design elements and durable materials that will withstand the test of time and won't require frequent updates. Pay attention to lighting, colour schemes, and fixtures, as these details can greatly enhance your overall bathroom experience.

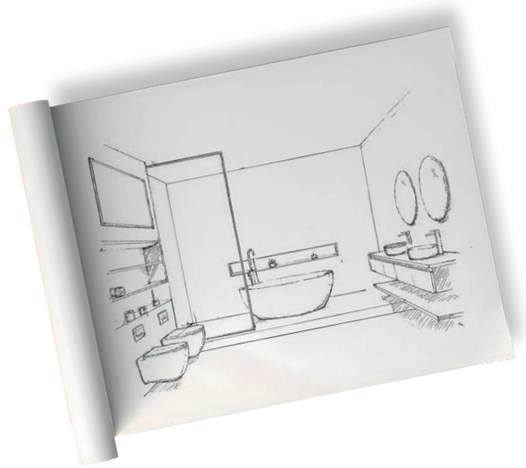

4 Budget

Setting a realistic budget is crucial when planning your bathroom renovation. Determine how much you can comfortably spend and allocate funds for each aspect of the project – including materials, labour, and unforeseen expenses. Prioritise your must haves and be prepared to make compromises if necessary. Remember to factor in additional costs, such as permits and professional fees. By creating a budget and sticking to it, you'll have a better understanding of what's financially feasible and avoid any unwelcome surprises as the renovation progresses.

5 Installation

When it comes to installation, it's essential to select reputable professionals who specialise in bathroom renovations. Seek recommendations from friends, family, and online review platforms to find qualified contractors and plumbers. Obtain multiple quotes and compare their expertise, prices, and timelines. Once you've chosen your team, establish clear communication channels and discuss the project's details to ensure everyone is on the same page. Regularly check in on progress, ask questions, and address any concerns promptly. Working with professionals will minimise stress and ensure a smooth process from start to finish.

By following these 5 steps, you can ensure a smooth and successful project from start to finish. With proper planning, you will be well on your way to creating a bathroom that perfectly suits your taste and needs.

Happy planning!

SONAS
BATHROOMS **REIMAGINED**

CONTENTS

6 \ Furniture

Freya 12
Finland 20
Malmö 28
Stockholm 36
Fjord 52
Arc 58
Vágar 62
Skål 64
Scandinavian Universal Wall Columns 70
Scandinavian WC Units 71
Scandinavian Bath Panels 71
Kora 72
Charm 76
Brava 78
Dijon 82
Smart 86
Paris 88
Prague 89
Otto Plus 90
Bristol 94
Basle 95
Belmont Square 96
Belmont 98
Kingston 100

102 \ Mirrors

Echo 106
Astrid 112
Sansa 114
Houston 118
Hampton Mirror Cabinets 119
Stilo Mirror Cabinets 119
Villa 119

120 \ Sanitaryware

Avanti 126
NEW Base 132
Via 134
Peña 138
Sophia 142
Inspire 144
Reflections 146
Horizon 148
Scala 152
Sigma 156
Rubix 160
Chloe 162
Strata 164
Westbury 166
Cambridge 168
Toilet Seats 170
Concealed Cisterns & Frames 171

172 \ Taps

Alita 176
NEW Hakk 180
Scope 182
Luta 184
Norfolk 186
Contour 188
Torc 190
Neo 190
Horley 191
Jasmin 191
Corby 192
Harrow 194
Bingley 196
Series C 197
Quartz 198
Cosmos 199
Contract 199
Sutton 200
Traditional Lever 201
Surrey 202
Edwardian 203
Ascot 204
Bottle Traps 205
Waste Fittings 205

206 \ Showers

Alita Rain Thermostatic Shower Kit 210
Alita Rain Square Thermostatic Shower Kit 212
Alita Round Bar Valve Kit 213
Concealed Thermostatic Shower Valves 220
Manual Shower Valves 221
Thermostatic Bath Shower Mixers 222
Slide Rail Kits 223
Shower Handsets 223
Bath Fillers 224
Shower Heads & Arms 225
Shower Accessories 226
Traditional Thermostatic Shower Kits 227
Traditional Shower Heads & Valves 227

228 \ Shower Enclosures

Shower Doors 232
Sliding Doors 240
Bifold & Infold Doors 244
Quadrant Doors 248
Offset Quadrant Doors 252
Hinged & Pivot Doors 256
Corner Entry 262

Wetroom Panels 264
Aspect Wetroom Panels 266
NEW Aspect Scandinavian Wetroom Panels 274
NEW Mirage Wetroom Panels 280

288 \ Shower Trays

Slate Shower Trays 292
Kristal Low Profile Shower Trays 296
JT Ultracast Shower Trays 297
Easy Plumb, Easy Access Kit 298
Anti Slip 298
Safe Seal 299

300 \ Baths

Freestanding Baths 306
NEW Samoa 306
NEW Seren 307
Abyss 308
Reef 309
Comino 310
Howe 311
Laguna 312
Lyra 313
Ontario 314
Marovo 315
Viceroy 318
Duchess 319

Standard Baths 322
Concerto 322
Maya 323
Arc 324
Cadenza 325
L Shape 326
P Shape 327
Oscar 328
Clover 329
Pacific Extra Deep Baths 330
Pacific Endura 332
Cubo 334
Strata 335
Lotus 335

336 \ Bath Screens & Panels

Lunar Bath Screens 336
Scandinavian Bath Panels 340
Belmont Bath Panels 340
Traditional Bath Waste Fittings 341
Bath Waste Fittings 341

342 \ Heating

Arya 346
Piatto 348
Como 349
Synergy 349
Amura 350
Forge 352
Ashton 353
Curved 354
Straight 355
Croft 356
Chapel 1 356
Chapel 2 356
Radiator Valves 357

358 \ Accessories

NEW Hakk 360
Alita 362
Arcana 363
Genesis 364
Parma 365
Beta 366
Ava 367
Piave 367
Stockton 368
Universal Accessories 369
Westbury 370

FURNITURE

Introducing our exceptional bathroom furniture collection, where style meets functionality to create a truly personalised bathroom experience. Designed with utmost care and attention to detail, our furniture showcases a wide range of design elements, colour options, and sizes, allowing you to find the perfect piece to suit your bathroom design and reflect your unique personality.

Our furniture units are not only functional in terms of ample storage space with soft-closing drawers and doors, but they also serve as focal design features, shaping the overall look and feel of your bathroom. With full extraction drawers, maximize your storage capacity and keep your essentials organised and easily accessible.

Elevate your bathroom to new levels of style and convenience with our exceptional furniture collection, where functionality and design seamlessly merge to create a bathroom that is both practical and visually stunning.

Explore endless possibilities and transform your bathroom into a space that is uniquely yours.

Bathroom Furniture Guide

When it comes to designing your bathroom, your choice of bathroom furniture can make a world of difference. Remember, your bathroom furniture should not only be functional but also complement your design preferences. Whether you have a spacious bathroom or a compact one, this comprehensive guide will help you navigate through various furniture options, styles, and tips to make the most of your space.

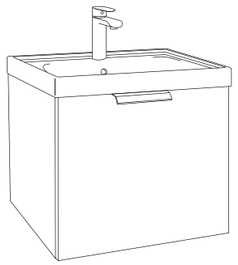

Wall Hung

An excellent choice for modern bathrooms, wall hung units offer elegant design while also maximising floor space, which can be especially useful in compact bathrooms. With flexibility in installation, you can set the vanity unit at a height that suits you and your family's comfort, ensuring a personalised and ergonomic experience.

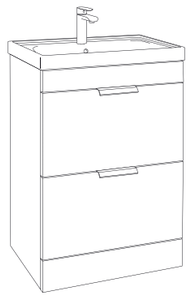

Floorstanding

A classic choice that marries timeless aesthetics with practicality, floorstanding furniture works well in both traditional and contemporary bathrooms. Offering ample storage, one of the key benefits of choosing these units is the possibility of concealing unsightly plumbing work, which creates a clean and polished look for your bathroom.

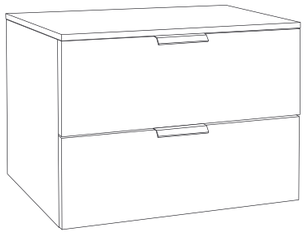

Countertop

For those seeking to infuse modernity and sophistication into their bathroom design, countertop units are the perfect solution. Allowing you to create a truly personalised bathroom space, their defining feature is the washbasin sitting atop the countertop. Giving you the option to complement your design with different sizes, shapes and colours of basins.

** Ensure your wall can support the weight of wall hung units and that pipework runs through the wall for a clean finish.*

WC Unit

WC units are known for their clean and minimalist design, making them a popular choice for modern bathrooms. These units discreetly conceal unsightly pipework offering a sleek and practical solution for incorporating a back-to-wall toilet in your bathroom. Select a colour that matches your bathroom's style and cleverly add shelf space for your bathroom's finishing touches.

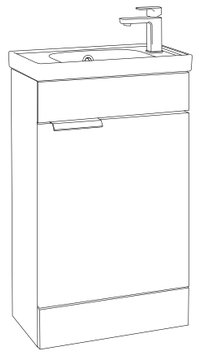

Cloakroom

Ideal for smaller bathrooms, cloakroom units are specifically tailored to make the most of limited space while providing essential functionality. Combining a basin with storage, they provide a place to store toiletries and other bathroom essentials neatly. Despite their small size, cloakroom vanity units come in various styles and designs to complement your bathroom decor.

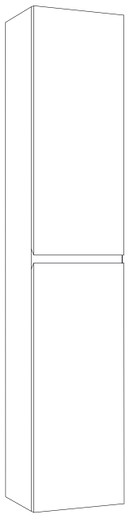

Wall Columns

When it comes to enhancing bathroom storage, wall column units prove to be a versatile and valuable addition. Their vertical design draws the eye upward, creating an illusion of a taller and more refined space. Designed to maximise storage, in smaller rooms or bathrooms with limited floor area, they become lifesavers by efficiently using the often-underutilised vertical dimension.

BASINS

Vanity Basin

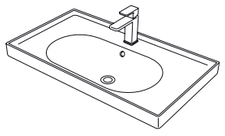

Ceramic or Resin

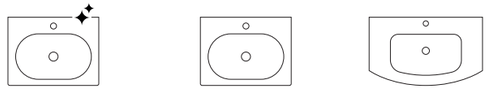

Gloss Ceramic Basin

Matt Ceramic Basin

Resin Basin

Countertop Basin

Ceramic or Resin

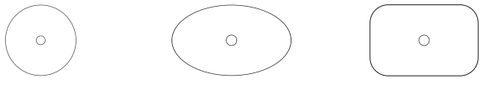

Round

Oval

Rectangle

SONAS

SCANDINAVIAN COLLECTION

The SONAS Scandinavian Collection comprises seven distinct furniture ranges inspired by the natural landscape of the region. Together they represent clean, simple lines, and minimalism. Our designers have achieved both enhanced functionality and form. Within the Scandinavian collection explore the range of distinctive finishes and the alternative options of integrated or countertop basins with either gloss finish first class ceramics, or matt solid surface resin basins. The choice of muted dark hues, light neutral colours, and warm colours, creates a feeling that is warm and inviting.

	FREYA	FINLAND	MALMÖ	STOCKHOLM	FJORD	ARC	VÁGAR
Gloss White				•	•		•
White Matt	•	•				•	
Matt Black	•	•	•	•	•	•	
Cashmere Pink Matt	•	•	•	•	•	•	
Morning Sky Blue Matt	•	•	•	•		•	
Ocean Blue Matt	•	•	•	•	•	•	•
Night Sky Blue Matt	•		•			•	•
Khaki Matt			•	•	•		•
Coral Green Matt	•	•					
Wreath Green Matt	•						
Arctic Grey Matt				•		•	•
Dolphin Grey Matt							•
Midnight Grey Matt		•	•	•	•		

FREYA

With a wide array of possibilities for your bathroom, FREYA is distinguished by its expansive colour range and superior design. Featuring elegant lines and generous wash space with a solid surface resin basin. Its inset metal angular handle delivers a sleek and subtle finish to your vanity unit. With FREYA you have the flexibility to achieve an end result characterised by high levels of customisation. FREYA's diverse range offers something for everyone. Take your time to explore mixing and matching, and give your bathroom a unique look.

Unit Options

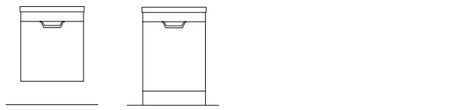

55cm Cloakroom Wall Hung

55cm Cloakroom Floorstanding

50cm Single Drawer Wall Hung

50cm Two Drawer Wall Hung

50cm Two Drawer Floorstanding

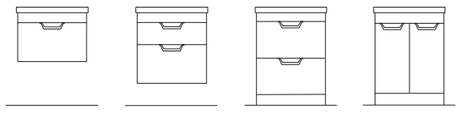

60cm Single Drawer Wall Hung

60cm Two Drawer Wall Hung

60cm Two Drawer Floorstanding

60cm Two Door Floorstanding

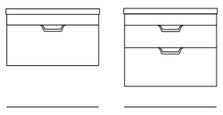

80cm Single Drawer Wall Hung

80cm Two Drawer Wall Hung

Colour Options

White Matt

Matt Black

Cashmere Pink Matt

Morning Sky Blue Matt

Ocean Blue Matt

Night Sky Blue Matt

Coral Green Matt

Wreath Green Matt

Handle Options

Chrome

Black

Gold

Resin Basin · 80cm

Soft Close

50cm · Wall Hung · 1 Drawer · Coral Green Matt

80cm · Wall Hung · 1 Drawer · Wreath Green Matt

60cm · Wall Hung · 2 Drawer · Matt Black

See Pages 70 - 71 for Coordinating
Wall Columns, WC Units & Bath Panels

See Pages 102 - 119
for Matching Mirror Ranges

See Pages 274 - 279
for NEW Coordinating Wetroom Panels

60cm · Floorstanding · 2 Door · Morning Sky Blue Matt

60cm · Floorstanding · 2 Drawer · White Matt

55cm · Wall Hung Cloakroom · Wreath Green Matt

55cm · Floorstanding Cloakroom · Ocean Blue Matt

FREYA \ 50cm

Wall Hung \ Single Drawer

Resin Basin
1 soft close drawer
W500 x D460mm
£675

	Chrome Handle	Matt Black Handle	Gold Handle
White Matt	CWFRE501DRMW	BWFRE501DRMW	GWFRE501DRMW
Matt Black	UF1127	UF1128	UF1129
Cashmere Pink Matt	CWFRE501DRCP	BWFRE501DRCP	GWFRE501DRCP
Morning Sky Blue Matt	CWFRE501DRMB	BWFRE501DRMB	GWFRE501DRMB
Ocean Blue Matt	CWFRE501DROB	BWFRE501DROB	GWFRE501DROB
Night Sky Blue Matt	CWFRE501DRNB	BWFRE501DRNB	GWFRE501DRNB
Coral Green Matt	CWFRE501DRCG	BWFRE501DRCG	GWFRE501DRCG
Wreath Green Matt	CWFRE501DRWG	BWFRE501DRWG	GWFRE501DRWG

Wall Hung \ Two Drawer

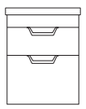

Resin Basin
2 soft close drawers
W500 x D460mm
£750

	Chrome Handle	Matt Black Handle	Gold Handle
White Matt	CWFRE502DRMW	BWFRE502DRMW	GWFRE502DRMW
Matt Black	UF1130	UF1131	UF1132
Cashmere Pink Matt	CWFRE502DRCP	BWFRE502DRCP	GWFRE502DRCP
Morning Sky Blue Matt	CWFRE502DRMB	BWFRE502DRMB	GWFRE502DRMB
Ocean Blue Matt	CWFRE502DROB	BWFRE502DROB	GWFRE502DROB
Night Sky Blue Matt	CWFRE502DRNB	BWFRE502DRNB	GWFRE502DRNB
Coral Green Matt	CWFRE502DRCG	BWFRE502DRCG	GWFRE502DRCG
Wreath Green Matt	CWFRE502DRWG	BWFRE502DRWG	GWFRE502DRWG

Floorstanding \ Two Drawer

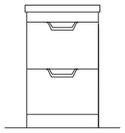

Resin Basin
2 soft close drawers
W500 x D460mm
£825

	Chrome Handle	Matt Black Handle	Gold Handle
White Matt	CFFRE502DRMW	BFFRE502DRMW	GFFRE502DRMW
Matt Black	UF1145	UF1146	UF1147
Cashmere Pink Matt	CFFRE502DRCP	BFFRE502DRCP	GFFRE502DRCP
Morning Sky Blue Matt	CFFRE502DRMB	BFFRE502DRMB	GFFRE502DRMB
Ocean Blue Matt	CFFRE502DROB	BFFRE502DROB	GFFRE502DROB
Night Sky Blue Matt	CFFRE502DRNB	BFFRE502DRNB	GFFRE502DRNB
Coral Green Matt	CFFRE502DRCG	BFFRE502DRCG	GFFRE502DRCG
Wreath Green Matt	CFFRE502DRWG	BFFRE502DRWG	GFFRE502DRWG

All Measurements in mm. All Prices include VAT

FREYA \ 55cm Cloakroom

Wall Hung \ Single Door

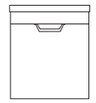

Resin Basin
(Right hand only)
1 soft close door
W550 x D300mm
£475

	Chrome Handle	Matt Black Handle	Gold Handle
White Matt	CWFRE55CRMW	BWFRE55CRMW	GWFRE55CRMW
Matt Black	UF1154	UF1155	UF1156
Cashmere Pink Matt	CWFRE55CRCP	BWFRE55CRCP	GWFRE55CRCP
Morning Sky Blue Matt	CWFRE55CRMB	BWFRE55CRMB	GWFRE55CRMB
Ocean Blue Matt	CWFRE55CROB	BWFRE55CROB	GWFRE55CROB
Night Sky Blue Matt	CWFRE55CRNB	BWFRE55CRNB	GWFRE55CRNB
Coral Green Matt	CWFRE55CRCG	BWFRE55CRCG	GWFRE55CRCG
Wreath Green Matt	CWFRE55CRWG	BWFRE55CRWG	GWFRE55CRWG

Floorstanding \ Single Door

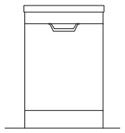

Resin Basin
(Right hand only)
1 soft close door
W550 x D300mm
£515

	Chrome Handle	Matt Black Handle	Gold Handle
White Matt	CFFRE55CRMW	BFFRE55CRMW	GFFRE55CRMW
Matt Black	UF1157	UF1158	UF1159
Cashmere Pink Matt	CFFRE55CRCP	BFFRE55CRCP	GFFRE55CRCP
Morning Sky Blue Matt	CFFRE55CRMB	BFFRE55CRMB	GFFRE55CRMB
Ocean Blue Matt	CFFRE55CROB	BFFRE55CROB	GFFRE55CROB
Night Sky Blue Matt	CFFRE55CRNB	BFFRE55CRNB	GFFRE55CRNB
Coral Green Matt	CFFRE55CRCG	BFFRE55CRCG	GFFRE55CRCG
Wreath Green Matt	CFFRE55CRWG	BFFRE55CRWG	GFFRE55CRWG

See Pages 70 - 71 for Coordinating
Wall Columns, WC Units & Bath Panels

See Pages 102 - 119
for Matching Mirror Ranges

See Pages 274 - 279
for NEW Coordinating Wetroom Panels

Taps Not Included See Pages page 172 - 204

FREYA \ 60cm

Wall Hung \ Single Drawer

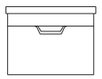

Resin Basin
1 soft close drawer
W600 x D460mm
£725

		Chrome Handle	Matt Black Handle	Gold Handle
White Matt		CWFRE601DRMW	BWFRE601DRMW	GWFRE601DRMW
Matt Black		UF1133	UF1134	UF1135
Cashmere Pink Matt		CWFRE601DRCP	BWFRE601DRCP	GWFRE601DRCP
Morning Sky Blue Matt		CWFRE601DRMB	BWFRE601DRMB	GWFRE601DRMB
Ocean Blue Matt		CWFRE601DROB	BWFRE601DROB	GWFRE601DROB
Night Sky Blue Matt		CWFRE601DRNB	BWFRE601DRNB	GWFRE601DRNB
Coral Green Matt		CWFRE601DRCG	BWFRE601DRCG	GWFRE601DRCG
Wreath Green Matt		CWFRE601DRWG	BWFRE601DRWG	GWFRE601DRWG

Wall Hung \ Two Drawer

Resin Basin
2 soft close drawers
W600 x D460mm
£795

		Chrome Handle	Matt Black Handle	Gold Handle
White Matt		CWFRE602DRMW	BWFRE602DRMW	GWFRE602DRMW
Matt Black		UF1136	UF1137	UF1138
Cashmere Pink Matt		CWFRE602DRCP	BWFRE602DRCP	GWFRE602DRCP
Morning Sky Blue Matt		CWFRE602DRMB	BWFRE602DRMB	GWFRE602DRMB
Ocean Blue Matt		CWFRE602DROB	BWFRE602DROB	GWFRE602DROB
Night Sky Blue Matt		CWFRE602DRNB	BWFRE602DRNB	GWFRE602DRNB
Coral Green Matt		CWFRE602DRCG	BWFRE602DRCG	GWFRE602DRCG
Wreath Green Matt		CWFRE602DRWG	BWFRE602DRWG	GWFRE602DRWG

Floorstanding \ Two Drawer

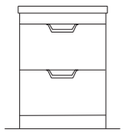

Resin Basin
2 soft close drawers
W600 x D460mm
£895

		Chrome Handle	Matt Black Handle	Gold Handle
White Matt		CFFRE602DRMW	BFFRE602DRMW	GFFRE602DRMW
Matt Black		UF1148	UF1149	UF1150
Cashmere Pink Matt		CFFRE602DRCP	BFFRE602DRCP	GFFRE602DRCP
Morning Sky Blue Matt		CFFRE602DRMB	BFFRE602DRMB	GFFRE602DRMB
Ocean Blue Matt		CFFRE602DROB	BFFRE602DROB	GFFRE602DROB
Night Sky Blue Matt		CFFRE602DRNB	BFFRE602DRNB	GFFRE602DRNB
Coral Green Matt		CFFRE602DRCG	BFFRE602DRCG	GFFRE602DRCG
Wreath Green Matt		CFFRE602DRWG	BFFRE602DRWG	GFFRE602DRWG

Floorstanding \ Two Door

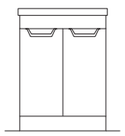

Resin Basin
2 soft close doors
W600 x D460mm
£825

		Chrome Handle	Matt Black Handle	Gold Handle
White Matt		CFFRE602DMW	BFFRE602DMW	GFFRE602DMW
Matt Black		UF1151	UF1152	UF1153
Cashmere Pink Matt		CFFRE602DCP	BFFRE602DCP	GFFRE602DCP
Morning Sky Blue Matt		CFFRE602DMB	BFFRE602DMB	GFFRE602DMB
Ocean Blue Matt		CFFRE602DOB	BFFRE602DOB	GFFRE602DOB
Night Sky Blue Matt		CFFRE602DNB	BFFRE602DNB	GFFRE602DNB
Coral Green Matt		CFFRE602DCG	BFFRE602DCG	GFFRE602DCG
Wreath Green Matt		CFFRE602DWG	BFFRE602DWG	GFFRE602DWG

All Measurements in mm. All Prices include VAT

FREYA \ 80cm

Wall Hung \ Single Drawer

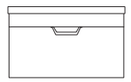

Resin Basin
1 soft close drawer
W800 x D460mm
£895

		Chrome Handle	Matt Black Handle	Gold Handle
White Matt		CWFRE801DRMW	BWFRE801DRMW	GWFRE801DRMW
Matt Black		UF1139	UF1140	UF1141
Cashmere Pink Matt		CWFRE801DRCP	BWFRE801DRCP	GWFRE801DRCP
Morning Sky Blue Matt		CWFRE801DRMB	BWFRE801DRMB	GWFRE801DRMB
Ocean Blue Matt		CWFRE801DROB	BWFRE801DROB	GWFRE801DROB
Night Sky Blue Matt		CWFRE801DRNB	BWFRE801DRNB	GWFRE801DRNB
Coral Green Matt		CWFRE801DRCG	BWFRE801DRCG	GWFRE801DRCG
Wreath Green Matt		CWFRE801DRWG	BWFRE801DRWG	GWFRE801DRWG

Wall Hung \ Two Drawer

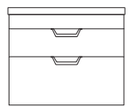

Resin Basin
2 soft close drawers
W800 x D460mm
£995

		Chrome Handle	Matt Black Handle	Gold Handle
White Matt		CWFRE802DRMW	BWFRE802DRMW	GWFRE802DRMW
Matt Black		UF1142	UF1143	UF1144
Cashmere Pink Matt		CWFRE802DRCP	BWFRE802DRCP	GWFRE802DRCP
Morning Sky Blue Matt		CWFRE802DRMB	BWFRE802DRMB	GWFRE802DRMB
Ocean Blue Matt		CWFRE802DROB	BWFRE802DROB	GWFRE802DROB
Night Sky Blue Matt		CWFRE802DRNB	BWFRE802DRNB	GWFRE802DRNB
Coral Green Matt		CWFRE802DRCG	BWFRE802DRCG	GWFRE802DRCG
Wreath Green Matt		CWFRE802DRWG	BWFRE802DRWG	GWFRE802DRWG

See Pages 70 - 71 for Coordinating
Wall Columns, WC Units & Bath Panels

See Pages 102 - 119
for Matching Mirror Ranges

See Pages 274 - 279
for NEW Coordinating Wetroom Panels

Taps Not Included See Pages page 172 - 204

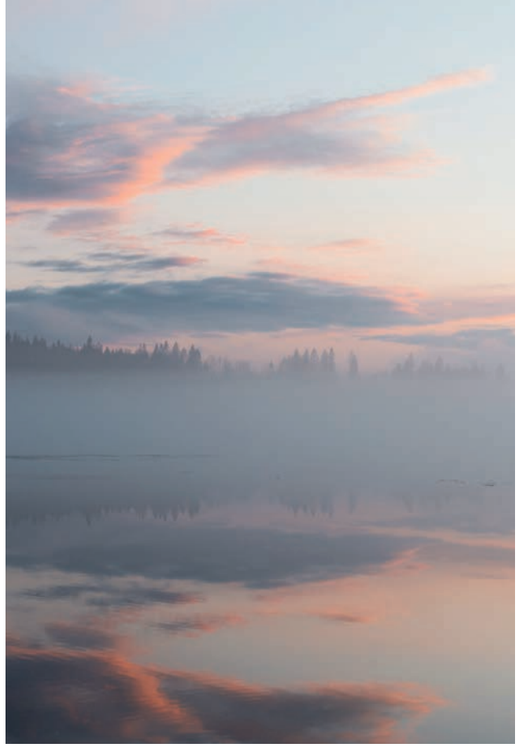

FINLAND

If you want to bring a timeless design element with practical applications into your bathroom, FINLAND is the perfect choice. Boasting rectangular, straight lines and framed front, FINLAND is styled with a front pull handle. Characterised by its symmetry, FINLAND displays pure, unembellished clean lines, a testament to the splendour of uncluttered design. Available with a ceramic basin or as a countertop unit, that is complemented by the SKÅL duo-tone basins or AVANTI ceramic vessel basins. Choose FINLAND and surround yourself with pure elegance.

Unit Options

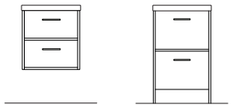

50cm
Wall Hung
Two Drawer

50cm
Floorstanding
Two Drawer

60cm
Wall Hung
Two Drawer

60cm
Floorstanding
Two Drawer

60cm
Wall Hung
Countertop
Two Drawer

80cm
Wall Hung
Two Drawer

80cm
Wall Hung
Countertop
Two Drawer

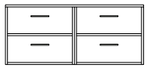

120cm
Wall Hung Countertop
Four Drawer

Colour Options

White
Matt

Matt
Black

Cashmere Pink
Matt

Morning Sky Blue
Matt

Ocean Blue
Matt

Coral Green
Matt

Midnight Grey
Matt

Handle Options

Chrome

Black

Gold

Ceramic Basin

Soft Close

50cm · Wall Hung · 2 Drawer · Matt Black

60cm · Countertop · 2 Drawer · Ocean Blue Matt

See Pages 70 - 71 for Coordinating
Wall Columns, WC Units & Bath Panels

See Pages 102 - 119
for Matching Mirror Ranges

See Pages 274 - 279
for NEW Coordinating Wetroom Panels

80cm · Wall Hung · 2 Drawer · Cashmere Pink Matt

120cm Countertop · 4 Drawer · Matt Black

FINLAND \ 50cm

Wall Hung

Ceramic basin
2 soft close drawers
W500 x D380mm
Short Projection
£725

	Brushed Chrome Handle	Matt Black Handle	Brushed Gold Handle
White Matt	UF0529	UF0530	UF0531
Matt Black	UF0872	UF0873	UF0874
Cashmere Pink Matt	UF0523	UF0524	UF0525
Morning Sky Blue Matt	UF0526	UF0527	UF0528
Ocean Blue Matt	CFIN50OB	BFIN50OB	GFIN50OB
Coral Green Matt	UF0869	UF0870	UF0871
Midnight Grey Matt	CFIN50MN	BFIN50MN	GFIN50MN

Floorstanding

Ceramic basin
2 soft close drawers
W500 x D380mm
Short Projection
£775

White Matt	UF0875	UF0876	UF0877
Matt Black	UF0878	UF0879	UF0880
Cashmere Pink Matt	UF0887	UF0888	UF0889
Morning Sky Blue Matt	UF0884	UF0885	UF0886
Ocean Blue Matt	UF0881	UF0882	UF0883
Coral Green Matt	UF0893	UF0894	UF0895
Midnight Grey Matt	UF0890	UF0891	UF0892

See Pages 70 - 71 for Coordinating
Wall Columns, WC Units & Bath Panels

See Pages 102 - 119
for Matching Mirror Ranges

See Pages 274 - 279
for NEW Coordinating Wetroom Panels

Taps Not Included See Pages page 172 - 204

60cm · Floorstanding · 2 Drawer · Coral Green Matt

FINLAND \ 60cm

Wall Hung

Ceramic basin
2 soft close drawers
W600 x D450mm
£775

	Brushed Chrome Handle	Matt Black Handle	Brushed Gold Handle
White Matt	UF0538	UF0539	UF0540
Matt Black	UF0899	UF0900	UF0901
Cashmere Pink Matt	UF0532	UF0533	UF0534
Morning Sky Blue Matt	UF0535	UF0536	UF0537
Ocean Blue Matt	CFIN60OB	BFIN60OB	GFIN60OB
Coral Green Matt	UF0896	UF0897	UF0898
Midnight Grey Matt	CFIN60MN	BFIN60MN	GFIN60MN

Wall Hung \ Countertop

2 soft close drawers
W600 x D450mm
£775

White Matt	UF0562	UF0563	UF0564
Matt Black	UF0905	UF0906	UF0907
Cashmere Pink Matt	UF0556	UF0557	UF0558
Morning Sky Blue Matt	UF0559	UF0560	UF0561
Ocean Blue Matt	CFIN60CTOB	BFIN60CTOB	GFIN60CTOB
Coral Green Matt	UF0902	UF0903	UF0904
Midnight Grey Matt	CFIN60CTMN	BFIN60CTMN	GFIN60CTMN

Floorstanding

Ceramic basin
2 soft close drawers
W600 x D450mm
£825

White Matt	UF0908	UF0909	UF0910
Matt Black	UF0911	UF0912	UF0913
Cashmere Pink Matt	UF0920	UF0921	UF0922
Morning Sky Blue Matt	UF0917	UF0918	UF0919
Ocean Blue Matt	UF0914	UF0915	UF0916
Coral Green Matt	UF0926	UF0927	UF0928
Midnight Grey Matt	UF0923	UF0924	UF0925

See Pages 70 - 71 for Coordinating
Wall Columns, WC Units & Bath Panels

See Pages 102 - 119
for Matching Mirror Ranges

See Pages 274 - 279
for NEW Coordinating Wetroom Panels

All Measurements in mm. All Prices include VAT

FINLAND \ 80cm

Wall Hung

Ceramic basin
2 soft close drawers
W800 x D450mm
£895

	Brushed Chrome Handle	Matt Black Handle	Brushed Gold Handle
White Matt	UF0547	UF0548	UF0549
Matt Black	UF0932	UF0933	UF0934
Cashmere Pink Matt	UF0541	UF0542	UF0543
Morning Sky Blue Matt	UF0544	UF0545	UF0546
Ocean Blue Matt	CFIN80OB	BFIN80OB	GFIN80OB
Coral Green Matt	UF0929	UF0930	UF0931
Midnight Grey Matt	CFIN80MN	BFIN80MN	GFIN80MN

Wall Hung \ Countertop

2 soft close drawers
W800 x D450mm
£895

White Matt	UF0571	UF0572	UF0573
Matt Black	UF0938	UF0939	UF0940
Cashmere Pink Matt	UF0565	UF0566	UF0WW567
Morning Sky Blue Matt	UF0568	UF0569	UF0570
Ocean Blue Matt	CFIN80CTOB	BFIN80CTOB	GFIN80CTOB
Coral Green Matt	UF0935	UF0936	UF0937
Midnight Grey Matt	CFIN80CTMN	BFIN80CTMN	GFIN80CTMN

FINLAND \ 120cm

Wall Hung \ Countertop

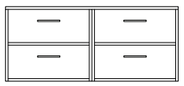

4 soft close drawers
W1200 x D450mm
£1415

	Brushed Chrome Handle	Matt Black Handle	Brushed Gold Handle
White Matt	UF0941	UF0942	UF0943
Matt Black	UF0944	UF0945	UF0946
Cashmere Pink Matt	UF0953	UF0954	UF0955
Morning Sky Blue Matt	UF0950	UF0951	UF0952
Ocean Blue Matt	UF0947	UF0948	UF0949
Coral Green Matt	UF0959	UF0960	UF0961
Midnight Grey Matt	UF0956	UF0957	UF0958

NOTE: *Price for Countertop Unit does not include Countertop Basin*

Taps Not Included See Pages page 172 - 204

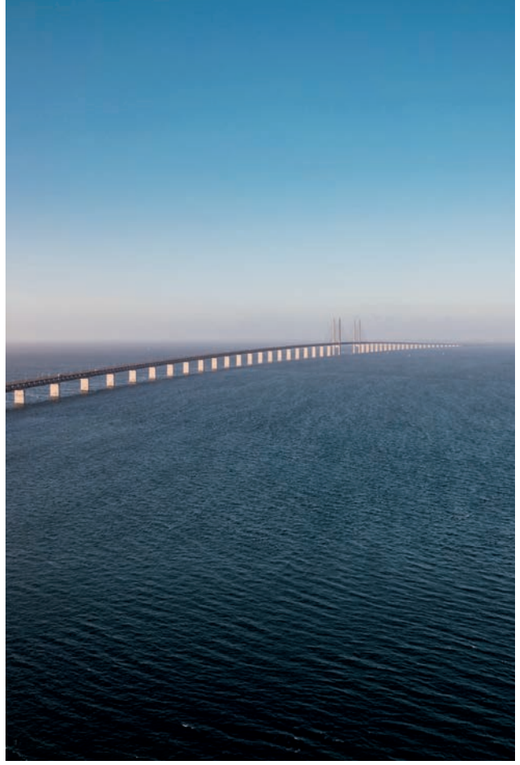

MALMÖ

Inspired by minimalist Scandinavian design and the northern winter, MALMÖ framed vanity unit blends modern design with natural elements. The distinctive MALMÖ features wide drawers and an oak effect finish exposed open shelf. This stylish vanity unit delivers great display and storage options with convenient access to your essential toiletries. The flexibility of MALMÖ allows you to choose a matt or gloss ceramic basin, or using a countertop that is compatible with the SKÅL basin range. MALMÖ's straight lines and front pull handle adds personality to your bathroom. Let the MALMÖ inspire your bathroom.

Unit Options

60cm
Wall Hung
Single Drawer

60cm
Floorstanding
Two Drawer

60cm
Wall Hung
Countertop
Single Drawer

80cm
Wall Hung
Single Drawer

80cm
Floorstanding
Two Drawer

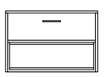

80cm
Wall Hung
Countertop
Single Drawer

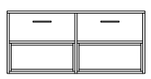

120cm
Wall Hung Countertop
Two Drawer

Colour Options

Morning Sky Blue
Matt

Matt
Black

Cashmere Pink
Matt

Ocean Blue
Matt

Night Sky Blue
Matt

Khaki
Matt

Midnight Grey
Matt

Basin Options

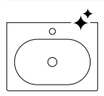

Gloss
Ceramic Basin

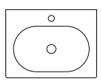

Matt
Ceramic Basin

Handle Options

Chrome

Black

Gold

Open Oak Shelf

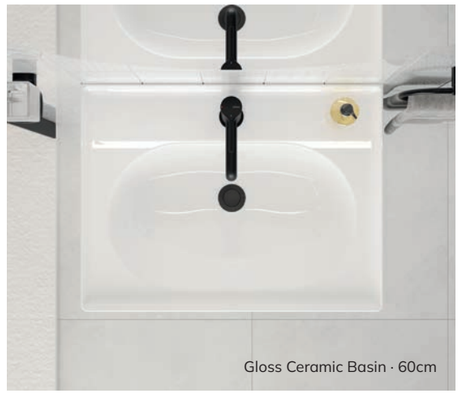

Gloss Ceramic Basin · 60cm

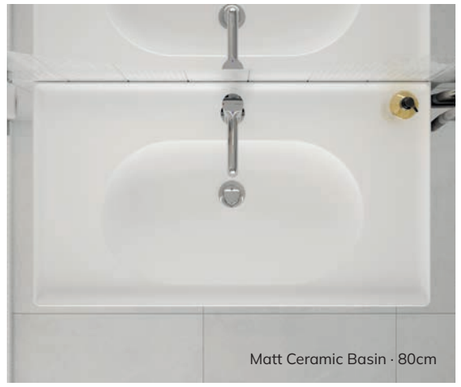

Matt Ceramic Basin · 80cm

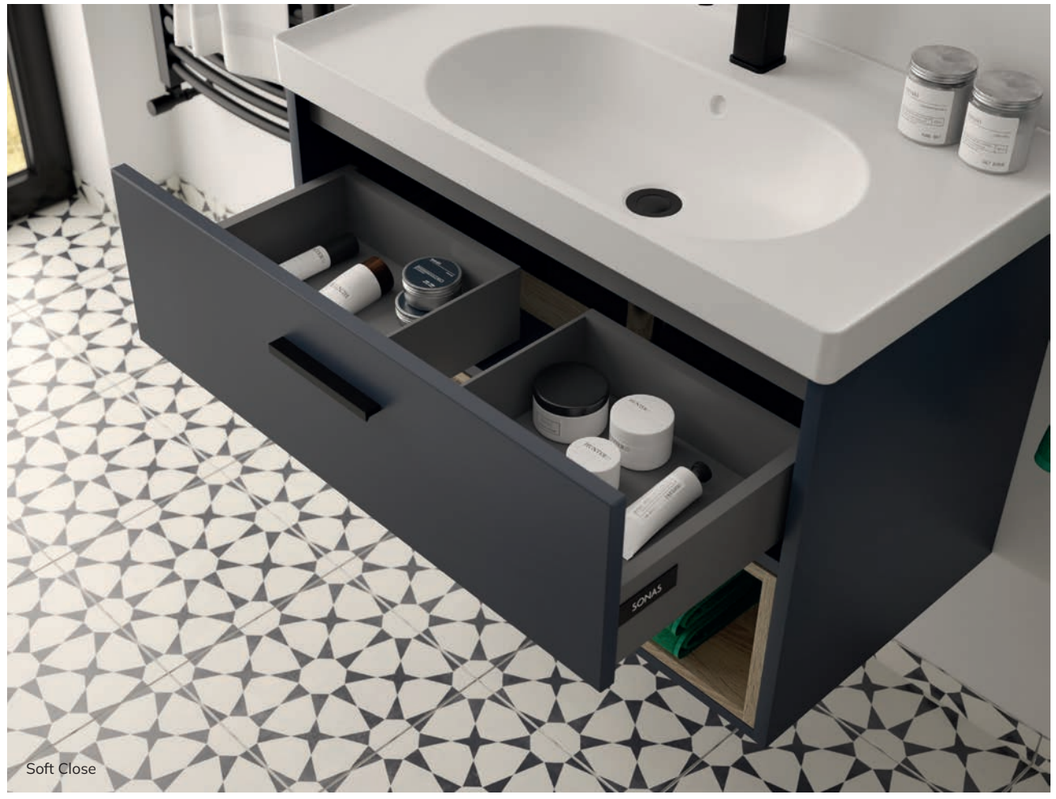

Soft Close

80cm · Floorstanding · 2 Drawer · Morning Sky Blue Matt

60cm · Wall Hung · 1 Drawer · Khaki Matt · Gloss Basin

80cm · Countertop · 1 Drawer · Night Sky Blue Matt

120cm · Countertop · 2 Drawer · Matt Black

MALMÖ Countertop Units

60cm Wall Hung

1 soft close drawer
with open oak shelf
W600 x D450mm
£625

	Brushed Chrome Handle	Matt Black Handle	Brushed Gold Handle
Matt Black	UF0980	UF0981	UF0982
Cashmere Pink Matt	UF0983	UF0984	UF0985
Morning Sky Blue Matt	UF0986	UF0987	UF0988
Ocean Blue Matt	CMAL60CTOB	BMAL60CTOB	GMAL60CTOB
Night Sky Blue Matt	CMAL60CTNB	BMAL60CTNB	GMAL60CTNB
Khaki Matt	CMAL60CTKH	BMAL60CTKH	GMAL60CTKH
Midnight Grey Matt	CMAL60CTMG	BMAL60CTMG	GMAL60CTMG

80cm Wall Hung

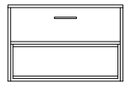

1 soft close drawer
with open oak shelf
W800 x D450mm
£725

Matt Black	UF1028	UF1029	UF1030
Cashmere Pink Matt	UF1031	UF1032	UF1033
Morning Sky Blue Matt	UF1034	UF1035	UF1036
Ocean Blue Matt	CMAL80CTOB	BMAL80CTOB	GMAL80CTOB
Night Sky Blue Matt	CMAL80CTNB	BMAL80CTNB	GMAL80CTNB
Khaki Matt	CMAL80CTKH	BMAL80CTKH	GMAL80CTKH
Midnight Grey Matt	CMAL80CTMG	BMAL80CTMG	GMAL80CTMG

120cm Wall Hung

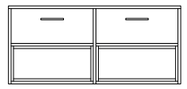

2 soft close drawers
with open oak shelves
W1200 x D450mm
£1220

Matt Black	UF1073	UF1074	UF1075
Cashmere Pink Matt	UF1076	UF1077	UF1078
Morning Sky Blue Matt	UF1061	UF1062	UF1063
Ocean Blue Matt	UF1058	UF1059	UF1060
Night Sky Blue Matt	UF1064	UF1065	UF1066
Khaki Matt	UF1070	UF1071	UF1072
Midnight Grey Matt	UF1067	UF1068	UF1069

NOTE: *Price for Countertop Unit does not include Countertop Basin*

For Countertop Basins
SKÅL Page 64 \ AVANTI Page 126

See Pages 70 - 71 for Coordinating
Wall Columns, WC Units & Bath Panels

See Pages 274 - 279
for NEW Coordinating Wetroom Panels

All Measurements in mm. All Prices include VAT

Taps Not Included See Pages page 172 - 204

MALMÖ 60cm

Wall Hung

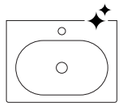

With Gloss
Ceramic Basin
£625

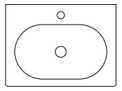

With Matt
Ceramic Basin
£725

1 soft close drawer
with open oak shelf
W600 x D450mm

		Brushed Chrome Handle	Matt Black Handle	Brushed Gold Handle		Brushed Chrome Handle	Matt Black Handle	Brushed Gold Handle
Matt Black		UF0962	UF0963	UF0964		UF0971	UF0972	UF0973
Cashmere Pink Matt		UF0965	UF0966	UF0967		UF0974	UF0975	UF0976
Morning Sky Blue Matt		UF0968	UF0969	UF0970		UF0977	UF0978	UF0979
Ocean Blue Matt		CMAL60OBGB	BMAL60OBGB	GMAL60OBGB		CMAL60OBMB	BMAL60OBMB	GMAL60OBMB
Night Sky Blue		CMAL60NBGB	BMAL60NBGB	GMAL60NBGB		CMAL60NBMB	BMAL60NBMB	GMAL60NBMB
Khaki Matt		CMAL60KHGB	BMAL60KHGB	GMAL60KHGB		CMAL60KHMB	BMAL60KHMB	GMAL60KHMB
Midnight Grey Matt		CMAL60MGGB	BMAL60MGGB	GMAL60MGGB		CMAL60MGMB	BMAL60MGMB	GMAL60MGMB

Floorstanding

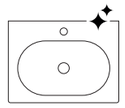

With Gloss
Ceramic Basin
£775

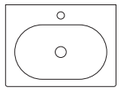

With Matt
Ceramic Basin
£875

2 soft close drawers
with open oak shelf
W600 x D450mm

		Brushed Chrome Handle	Matt Black Handle	Brushed Gold Handle		Brushed Chrome Handle	Matt Black Handle	Brushed Gold Handle
Matt Black		UF1004	UF1005	UF1006		UF1193	UF1194	UF1195
Cashmere Pink Matt		UF1007	UF1008	UF1009		UF1196	UF1197	UF1198
Morning Sky Blue Matt		UF0992	UF0993	UF0994		UF1181	UF1182	UF1183
Ocean Blue Matt		UF0989	UF0990	UF0991		UF1178	UF1179	UF1180
Night Sky Blue		UF0995	UF0996	UF0997		UF1184	UF1185	UF1186
Khaki Matt		UF1001	UF1002	UF1003		UF1190	UF1191	UF1192
Midnight Grey Matt		UF0998	UF0999	UF1000		UF1187	UF1188	UF1189

All Measurements in mm. All Prices include VAT

MALMÖ 80cm

Wall Hung

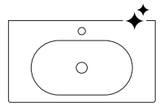

With Gloss
Ceramic Basin
£725

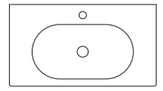

With Matt
Ceramic Basin
£825

1 soft close drawer
with open oak shelf
W800 x D450mm

		Brushed Chrome Handle	Matt Black Handle	Brushed Gold Handle		Brushed Chrome Handle	Matt Black Handle	Brushed Gold Handle
Matt Black		UF1010	UF1011	UF1012		UF1019	UF1020	UF1021
Cashmere Pink Matt		UF1013	UF1014	UF1015		UF1022	UF1023	UF1024
Morning Sky Blue Matt		UF1016	UF1017	UF1018		UF1025	UF1026	UF1027
Ocean Blue Matt		CMAL80OBGB	BMAL80OBGB	GMAL80OBGB		CMAL80OBMB	BMAL80OBMB	GMAL80OBMB
Night Sky Blue		CMAL80NBGB	BMAL80NBGB	GMAL80NBGB		*CMAL80NBMB*	*BMAL80NBMB*	*GMAL80NBMB*
Khaki Matt		CMAL80KHGB	BMAL80KHGB	GMAL80KHGB		CMAL80KHMB	BMAL80KHMB	GMAL80KHMB
Midnight Grey Matt		CMAL80MGGB	BMAL80MGGB	GMAL80MGGB		CMAL80MGMB	BMAL80MGMB	GMAL80MGMB

Floorstanding

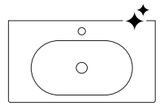

With Gloss
Ceramic Basin
£895

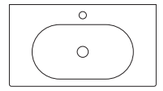

With Matt
Ceramic Basin
£995

2 soft close drawers
with open oak shelf
W800 x D450mm

		Brushed Chrome Handle	Matt Black Handle	Brushed Gold Handle		Brushed Chrome Handle	Matt Black Handle	Brushed Gold Handle
Matt Black		UF1052	UF1053	UF1054		UF1214	UF1215	UF1216
Cashmere Pink Matt		UF1055	UF1056	UF1057		UF1217	UF1218	UF1219
Morning Sky Blue Matt		UF1040	UF1041	UF1042		UF1202	UF1203	UF1204
Ocean Blue Matt		UF1037	UF1038	UF1039		UF1199	UF1200	UF1201
Night Sky Blue		UF1043	UF1044	UF1045		UF1205	UF1206	UF1207
Khaki Matt		UF1049	UF1050	UF1051		UF1211	UF1212	UF1213
Midnight Grey Matt		UF1046	UF1047	UF1048		UF1208	UF1209	UF1210

See Pages 70 - 71 for Coordinating
Wall Columns, WC Units & Bath Panels

See Pages 274 - 279
for NEW Coordinating Wetroom Panels

Taps Not Included See Pages page 172 - 204

STOCKHOLM

Showcasing its refined top edge handles, elegant lines and rich colour, STOCKHOLM creates memorable spaces that truly challenge our typical view of what a bathroom should be. Practical and stylish with straight minimalist lines, STOCKHOLM units are available in different colours, heights and widths, you can mix and match. Appreciate drawer & doors soft close mechanism as they close gently and make a statement in your bathroom with this STOCKHOLM vanity unit. With options for larger family bathrooms or the most compact of cloakroom WCs, STOCKHOLM can adapt to fit your space.

Colour Options

Gloss White

Matt Black

Cashmere Pink Matt

Morning Sky Blue Matt

Ocean Blue Matt

Khaki Matt

Arctic Grey Matt

Midnight Grey Matt

Handle Options

Brushed Chrome

Matt Black

Brushed Gold

NEW
Brushed Nickel

Unit Options

50cm Wall Hung Cloakroom

50cm Floorstanding Cloakroom

50cm Wall Hung Single Drawer

50cm Wall Hung Two Door

50cm Floorstanding Two Drawer

50cm Floorstanding Two Door

60cm Wall Hung Two Drawer

60cm Wall Hung Two Door

60cm Floorstanding Two Drawer

60cm Floorstanding Two Door

60cm Wall Hung Countertop Two Drawer

60cm Wall Hung Countertop Two Door

60cm Floorstanding Countertop Two Drawer

60cm Floorstanding Countertop Two Door

80cm Wall Hung Two Drawer

80cm Wall Hung Countertop Two Drawer

120cm Wall Hung Countertop Four Drawer

120cm Wall Hung Countertop Two Drawer \ Two Door

120cm Wall Hung Countertop Four Door

120cm Floorstanding Countertop Four Drawer

120cm Wall Hung Countertop Two Drawer \ Two Door

120cm Wall Hung Countertop Four Door

Ceramic Basin

Soft Close

NEW

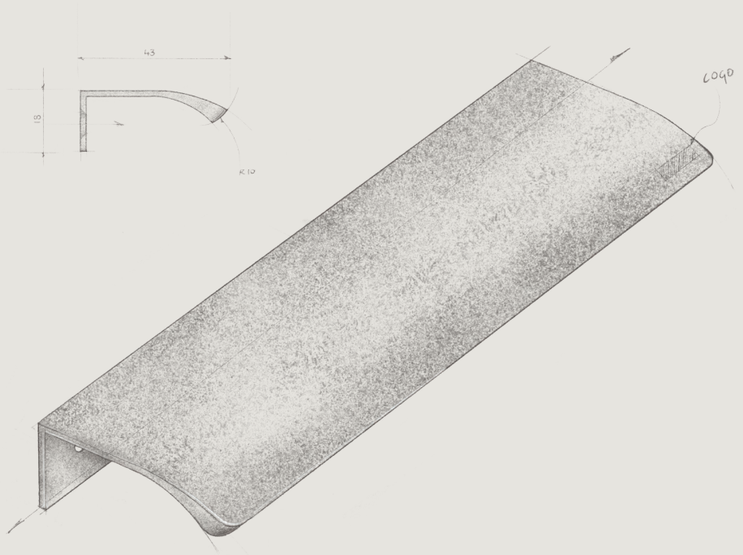

Brushed Nickel Handle

STOCKHOLM · 80cm Wall Hung · Midnight Grey Matt · Brushed Nickel Handle

50cm · Wall Hung · 1 Drawer · Gloss White

60cm · Wall Hung · 2 Drawer · Arctic Grey Matt

60cm · Floorstanding · 2 Drawer · Ocean Blue Matt

80cm · Wall Hung · Countertop · 2 Drawer · Midnight Grey Matt

120cm · Wall Hung · Countertop · 4 Drawer · Cashmere Pink Matt

50cm · Wall Hung · 2 Door · Matt Black

50cm · Floorstanding · 2 Door · Arctic Grey Matt

60cm · Floorstanding · Countertop · 2 Door · Morning Sky Blue Matt

60cm · Wall Hung · Countertop · 2 Door · Ocean Blue Matt

120cm · Floorstanding · Countertop · 4 Door · Gloss White

50cm · Wall Hung Cloakroom · Ocean Blue Matt

50cm · Floorstanding Cloakroom · Arctic Grey Matt

STOCKHOLM \ 50cm Cloakroom

Wall Hung \ Single Door

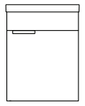

Ceramic basin
(Right Hand Only)
1 soft close door
W500 x D280mm
£395

	Brushed Chrome Handle	Matt Black Handle	Brushed Gold Handle	Brushed Nickel Handle
Gloss White	CWST50CRWH	BWST50CRWH	GWST50CRWH	UF1498
Matt Black	UF0722	UF0723	UF0724	UF1499
Cashmere Pink Matt	UF0725	UF0726	UF0727	UF1500
Morning Sky Blue Matt	UF0728	UF0729	UF0730	UF1501
Ocean Blue Matt	CWST50CROB	BWST50CROB	GWST50CROB	UF1502
Khaki Matt	CWST50CRKH	BWST50CRKH	GWST50CRKH	UF1503
Arctic Grey Matt	CWST50CRAG	BWST50CRAG	GWST50CRAG	UF1504
Midnight Grey Matt	CWST50CRMN	BWST50CRMN	GWST50CRMN	UF1505

Floorstanding \ Single Door

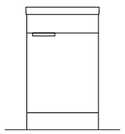

Ceramic basin
(Right Hand Only)
1 soft close door
W500 x D280mm
£415

Gloss White	CFST50CRWH	BFST50CRWH	GFST50CRWH	UF1506
Matt Black	UF0731	UF0732	UF0733	UF1507
Cashmere Pink Matt	UF0734	UF0735	UF0736	UF1508
Morning Sky Blue Matt	UF0737	UF0738	UF0739	UF1509
Ocean Blue Matt	CFST50CROB	BFST50CROB	GFST50CROB	UF1510
Khaki Matt	CFST50CRKH	BFST50CRKH	GFST50CRKH	UF1511
Arctic Grey Matt	CFST50CRAG	BFST50CRAG	GFST50CRAG	UF1512
Midnight Grey Matt	CFST50CRMN	BFST50CRMN	GFST50CRMN	UF1513

All Measurements in mm. All Prices include VAT

STOCKHOLM \ 50cm

Wall Hung \ Single Door

Ceramic basin
2 soft close drawers
W500 x D380mm
Short Projection
£515

	Brushed Chrome Handle	Matt Black Handle	Brushed Gold Handle	Brushed Nickel Handle
Gloss White	CWST50WH	BWST50WH	GWST50WH	UF1514
Matt Black	UF0740	UF0741	UF0742	UF1515
Cashmere Pink Matt	UF0743	UF0744	UF0745	UF1516
Morning Sky Blue Matt	UF0746	UF0747	UF0748	UF1517
Ocean Blue Matt	CWST50OB	BWST50OB	GWST50OB	UF1518
Khaki Matt	CWST50KH	BWST50KH	GWST50KH	UF1519
Arctic Grey Matt	CWST50AG	BWST50AG	GWST50AG	UF1520
Midnight Grey Matt	CWST50MN	BWST50MN	GWST50MN	UF1521

Wall Hung \ Two Door

Ceramic basin
2 soft close doors
W500 x D380mm
Short Projection
£425

Gloss White	UF0749	UF0750	UF0751	UF1522
Matt Black	UF0770	UF0771	UF0772	UF1523
Cashmere Pink Matt	UF0767	UF0768	UF0769	UF1524
Morning Sky Blue Matt	UF0761	UF0762	UF0763	UF1525
Ocean Blue Matt	UF0764	UF0765	UF0766	UF1526
Khaki Matt	UF0758	UF0759	UF0760	UF1527
Arctic Grey Matt	UF0755	UF0756	UF0757	UF1528
Midnight Grey Matt	UF0752	UF0753	UF0754	UF1529

Floorstanding \ Two Drawer

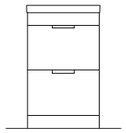

Ceramic basin
2 soft close drawers
W500 x D380mm
Short Projection
£695

Gloss White	CDST50WH	BDST50WH	GDST50WH	UF1530
Matt Black	UF0842	UF0843	UF0844	UF1531
Cashmere Pink Matt	UF0845	UF0846	UF0847	UF1532
Morning Sky Blue Matt	UF0848	UF0849	UF0850	UF1533
Ocean Blue Matt	CDST50OB	BDST50OB	GDST50OB	UF1534
Khaki Matt	CDST50KH	BDST50KH	GDST50KH	UF1535
Arctic Grey Matt	CDST50AG	BDST50AG	GDST50AG	UF1536
Midnight Grey Matt	CDST50MN	BDST50MN	GDST50MN	UF1537

Floorstanding \ Two Door

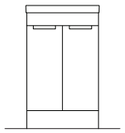

Ceramic basin
2 soft close doors
W500 x D380mm
Short Projection
£575

Gloss White	CFST50WH	BFST50WH	GFST50WH	UF1538
Matt Black	UF0833	UF0834	UF0835	UF1539
Cashmere Pink Matt	UF0836	UF0837	UF0838	UF1540
Morning Sky Blue Matt	UF0839	UF0840	UF0841	UF1541
Ocean Blue Matt	CFST50OB	BFST50OB	GFST50OB	UF1542
Khaki Matt	CFST50KH	BFST50KH	GFST50KH	UF1543
Arctic Grey Matt	CFST50AG	BFST50AG	GFST50AG	UF1544
Midnight Grey Matt	CFST50MN	BFST50MN	GFST50MN	UF1545

Taps Not Included See Pages page 172 - 204

STOCKHOLM \ 60cm

Wall Hung \ Two Drawer

Ceramic basin
2 soft close drawers
W600 x D450mm
£695

	Brushed Chrome Handle	Matt Black Handle	Brushed Gold Handle	Brushed Nickel Handle
Gloss White	CWST60WH	BWST60WH	GWST60WH	UF1546
Matt Black	UF0797	UF0798	UF0799	UF1547
Cashmere Pink Matt	UF0800	UF0801	UF0802	UF1548
Morning Sky Blue Matt	UF0803	UF0804	UF0805	UF1549
Ocean Blue Matt	CWST60OB	BWST60OB	GWST60OB	UF1550
Khaki Matt	CWST60KH	BWST60KH	GWST60KH	UF1551
Arctic Grey Matt	CWST60AG	BWST60AG	GWST60AG	UF1552
Midnight Grey Matt	CWST60MN	BWST60MN	GWST60MN	UF1553

Wall Hung \ Two Door

Ceramic basin
2 soft close doors
W600 x D450mm
£520

Gloss White	UF0773	UF0774	UF0775	UF1554
Matt Black	UF0794	UF0795	UF0796	UF1555
Cashmere Pink Matt	UF0791	UF0792	UF0793	UF1556
Morning Sky Blue Matt	UF0785	UF0786	UF0787	UF1557
Ocean Blue Matt	UF0788	UF0789	UF0790	UF1558
Khaki Matt	UF0782	UF0783	UF0784	UF1559
Arctic Grey Matt	UF0779	UF0780	UF0781	UF1560
Midnight Grey Matt	UF0776	UF0777	UF0778	UF1561

Floorstanding \ Two Drawer

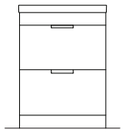

Ceramic basin
2 soft close drawers
W600 x D450mm
£745

Gloss White	CDST60WH	BDST60WH	GDST60WH	UF1562
Matt Black	UF0860	UF0861	UF0862	UF1563
Cashmere Pink Matt	UF0863	UF0864	UF0865	UF1564
Morning Sky Blue Matt	UF0866	UF0867	UF0868	UF1565
Ocean Blue Matt	CDST60OB	BDST60OB	GDST60OB	UF1566
Khaki Matt	CDST60KH	BDST60KH	GDST60KH	UF1567
Arctic Grey Matt	CDST60AG	BDST60AG	GDST60AG	UF1568
Midnight Grey Matt	CDST60MN	BDST60MN	GDST60MN	UF1569

Floorstanding \ Two Door

Ceramic basin
2 soft close doors
W600 x D450mm
£625

Gloss White	CFST60WH	BFST60WH	GFST60WH	UF1570
Matt Black	UF0851	UF0852	UF0853	UF1571
Cashmere Pink Matt	UF0854	UF0855	UF0856	UF1572
Morning Sky Blue Matt	UF0857	UF0858	UF0859	UF1573
Ocean Blue Matt	CFST60OB	BFST60OB	GFST60OB	UF1574
Khaki Matt	CFST60KH	BFST60KH	GFST60KH	UF1575
Arctic Grey Matt	CFST60AG	BFST60AG	GFST60AG	UF1576
Midnight Grey Matt	CFST60MN	BFST60MN	GFST60MN	UF1577

All Measurements in mm. All Prices include VAT

STOCKHOLM \ 60cm Countertop

Wall Hung \ Two Drawer

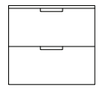

2 soft close drawers
W600 x D450mm
£695

	Brushed Chrome Handle	Matt Black Handle	Brushed Gold Handle	Brushed Nickel Handle
Gloss White	*CWST60CTWH*	*BWST60CTWH*	*GWST60CTWH*	UF1578
Matt Black	UF0806	UF0807	UF0808	UF1579
Cashmere Pink Matt	UF0809	UF0810	UF0811	UF1580
Morning Sky Blue Matt	UF0812	UF0813	UF0814	UF1581
Ocean Blue Matt	CWST60CTOB	BWST60CTOB	GWST60CTOB	UF1582
Khaki Matt	CWST60CTKH	BWST60CTKH	GWST60CTKH	UF1583
Arctic Grey Matt	CWST60CTAG	BWST60CTAG	GWST60CTAG	UF1584
Midnight Grey Matt	CWST60CTMN	BWST60CTMN	GWST60CTMN	UF1585

Wall Hung \ Two Door

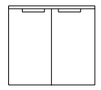

2 soft close doors
W600 x D450mm
£520

Gloss White	UF1250	UF1251	UF1252	UF1586
Matt Black	UF1271	UF1272	UF1273	UF1587
Cashmere Pink Matt	UF1268	UF1269	UF1270	UF1588
Morning Sky Blue Matt	UF1262	UF1263	UF1264	UF1589
Ocean Blue Matt	UF1265	UF1266	UF1267	UF1590
Khaki Matt	UF1259	UF1260	UF1261	UF1591
Arctic Grey Matt	UF1256	UF1257	UF1258	UF1592
Midnight Grey Matt	UF1253	UF1254	UF1255	UF1593

Floorstanding \ Two Drawer

2 soft close drawers
W600 x D450mm
£745

Gloss White	*UF1394*	*UF1395*	*UF1396*	**UF1594**
Matt Black	*UF1409*	*UF1410*	*UF1411*	UF1595
Cashmere Pink Matt	*UF1412*	*UF1413*	*UF1414*	UF1596
Morning Sky Blue Matt	UF1415	UF1416	UF1417	UF1597
Ocean Blue Matt	*UF1406*	*UF1407*	*UF1408*	UF1598
Khaki Matt	*UF1400*	*UF1401*	*UF1402*	UF1599
Arctic Grey Matt	*UF1397*	*UF1398*	*UF1399*	UF1600
Midnight Grey Matt	UF1403	UF1404	UF1405	UF1601

Floorstanding \ Two Door

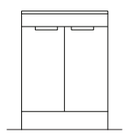

2 soft close doors
W600 x D450mm
£645

Gloss White	UF1418	UF1419	UF1420	**UF1602**
Matt Black	UF1433	UF1434	UF1435	UF1603
Cashmere Pink Matt	UF1436	UF1437	UF1438	UF1604
Morning Sky Blue Matt	UF1439	UF1440	UF1441	UF1605
Ocean Blue Matt	UF1430	UF1431	UF1432	UF1606
Khaki Matt	UF1424	UF1425	UF1426	UF1607
Arctic Grey Matt	UF1421	UF1422	UF1423	UF1608
Midnight Grey Matt	UF1427	UF1428	UF1429	UF1609

NOTE: *Price for Countertop Unit does not include Countertop Basin*

Taps Not Included See Pages page 172 - 204

80cm · Wall Hung Countertop · Gloss White

STOCKHOLM \ 80cm

Wall Hung \ Two Drawer

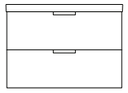

Ceramic basin
2 soft close drawers
W800 x D450mm
£825

	Brushed Chrome Handle	Matt Black Handle	Brushed Gold Handle	Brushed Nickel Handle
Gloss White	*CWST80WH*	*BWST80WH*	*GWST80WH*	UF1610
Matt Black	UF0815	UF0816	UF0817	UF1611
Cashmere Pink Matt	UF0818	UF0819	UF0820	UF1612
Morning Sky Blue Matt	UF0821	UF0822	UF0823	UF1613
Ocean Blue Matt	CWST80OB	BWST80OB	GWST80OB	UF1614
Khaki Matt	CWST80KH	BWST80KH	GWST80KH	UF1615
Arctic Grey Matt	CWST80AG	BWST80AG	GWST80AG	UF1616
Midnight Grey Matt	CWST80MN	BWST80MN	GWST80MN	UF1617

STOCKHOLM \ 80cm Countertop

Wall Hung \ Two Drawer

2 soft close drawers
W800 x D450mm
£825

	Brushed Chrome Handle	Matt Black Handle	Brushed Gold Handle	Brushed Nickel Handle
Gloss White	*CWST80CTWH*	*BWST80CTWH*	*GWST80CTWH*	UF1618
Matt Black	UF0824	UF0825	UF0826	UF1619
Cashmere Pink Matt	UF0827	UF0828	UF0829	UF1620
Morning Sky Blue Matt	UF0830	UF0831	UF0832	UF1621
Ocean Blue Matt	CWST80CTOB	BWST80CTOB	GWST80CTOB	UF1622
Khaki Matt	CWST80CTKH	BWST80CTKH	GWST80CTKH	UF1623
Arctic Grey Matt	CWST80CTAG	BWST80CTAG	GWST80CTAG	UF1624
Midnight Grey Matt	CWST80CTMN	BWST80CTMN	GWST80CTMN	UF1625

NOTE: *Price for Countertop Unit does not include Countertop Basin*

For Countertop Basins
SKÅL Page 64 \ AVANTI Page 126

See Pages 70 - 71 for Coordinating
Wall Columns, WC Units & Bath Panels

See Pages 274 - 279
for NEW Coordinating Wetroom Panels

All Measurements in mm. All Prices include VAT

Taps Not Included See Pages page 172 - 204

STOCKHOLM \ 120cm Wall Hung Countertop

Four Drawer

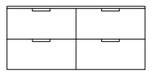

4 soft close drawers
W1200 x D450mm
£1230

		Brushed Chrome Handle	Matt Black Handle	Brushed Gold Handle	Brushed Nickel Handle
Gloss White		UF1220	UF1221	UF1222	UF1626
Matt Black		UF1235	UF1236	UF1237	UF1627
Cashmere Pink Matt		UF1238	UF1239	UF1240	UF1628
Morning Sky Blue Matt		UF1241	UF1242	UF1243	UF1629
Ocean Blue Matt		UF1229	UF1230	UF1231	UF1630
Khaki Matt		UF1226	UF1227	UF1228	UF1631
Arctic Grey Matt		UF1223	UF1224	UF1225	UF1632
Midnight Grey Matt		UF1232	UF1233	UF1234	UF1633

Four Door

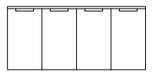

4 soft close doors
W1200 x D450mm
£1045

Gloss White		UF1274	UF1275	UF1276	UF1634
Matt Black		UF1277	UF1278	UF1279	UF1635
Cashmere Pink Matt		UF1280	UF1281	UF1282	UF1636
Morning Sky Blue Matt		UF1283	UF1284	UF1285	UF1637
Ocean Blue Matt		UF1286	UF1287	UF1288	UF1638
Khaki Matt		UF1289	UF1290	UF1291	UF1639
Arctic Grey Matt		UF1292	UF1293	UF1294	UF1640
Midnight Grey Matt		UF1295	UF1296	UF1297	UF1641

Two Drawer \ Two Door

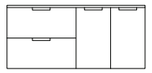

2 soft close drawers
2 soft close doors
W1200 x D450mm
£1135

Gloss White		UF1298	UF1299	UF1300	**UF1642**
Matt Black		UF1301	UF1302	UF1303	UF1643
Cashmere Pink Matt		UF1304	UF1305	UF1306	UF1644
Morning Sky Blue Matt		UF1307	UF1308	UF1309	UF1645
Ocean Blue Matt		UF1310	UF1311	UF1312	UF1646
Khaki Matt		UF1313	UF1314	UF1315	UF1647
Arctic Grey Matt		UF1316	UF1317	UF1318	UF1648
Midnight Grey Matt		UF1319	UF1320	UF1321	UF1649

NOTE: *Price for Countertop Unit does not include Countertop Basin*

STOCKHOLM \ 120cm Floorstanding Countertop

Four Drawer

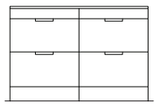

4 soft close drawers
W1200 x D450mm
£1420

		Brushed Chrome Handle	Matt Black Handle	Brushed Gold Handle	Brushed Nickel Handle
Gloss White		UF1322	UF1323	UF1324	UF1650
Matt Black		UF1325	UF1326	UF1327	UF1651
Cashmere Pink Matt		UF1328	UF1329	UF1330	UF1652
Morning Sky Blue Matt		UF1331	UF1332	UF1333	UF1653
Ocean Blue Matt		UF1334	UF1335	UF1336	UF1654
Khaki Matt		UF1337	UF1338	UF1339	UF1655
Arctic Grey Matt		UF1340	UF1341	UF1342	UF1656
Midnight Grey Matt		UF1343	UF1344	UF1345	UF1657

Four Door

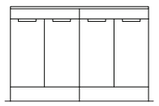

4 soft close doors
W1200 x D450mm
£1230

Gloss White		UF1346	UF1347	UF1348	UF1658
Matt Black		UF1349	UF1350	UF1351	UF1659
Cashmere Pink Matt		UF1352	UF1353	UF1354	UF1660
Morning Sky Blue Matt		UF1355	UF1356	UF1357	UF1661
Ocean Blue Matt		UF1358	UF1359	UF1360	UF1662
Khaki Matt		UF1361	UF1362	UF1363	UF1663
Arctic Grey Matt		UF1364	UF1365	UF1366	UF1664
Midnight Grey Matt		UF1367	UF1368	UF1369	UF1665

Two Drawer \ Two Door

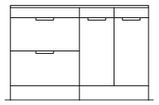

2 soft close drawers
2 soft close doors
W1200 x D450mm
£1325

Gloss White		UF1370	UF1371	UF1372	**UF1666**
Matt Black		UF1373	UF1374	UF1375	UF1667
Cashmere Pink Matt		UF1376	UF1377	UF1378	UF1668
Morning Sky Blue Matt		UF1379	UF1380	UF1381	UF1669
Ocean Blue Matt		UF1382	UF1383	UF1384	UF1670
Khaki Matt		UF1385	UF1386	UF1387	UF1671
Arctic Grey Matt		UF1388	UF1389	UF1390	UF1672
Midnight Grey Matt		UF1391	UF1392	UF1393	UF1673

NOTE: *Price for Countertop Unit does not include Countertop Basin*

For Countertop Basins
SKÅL Page 64 \ AVANTI Page 126

See Pages 70 - 71 for Coordinating
Wall Columns, WC Units & Bath Panels

See Pages 274 - 279
for NEW Coordinating Wetroom Panels

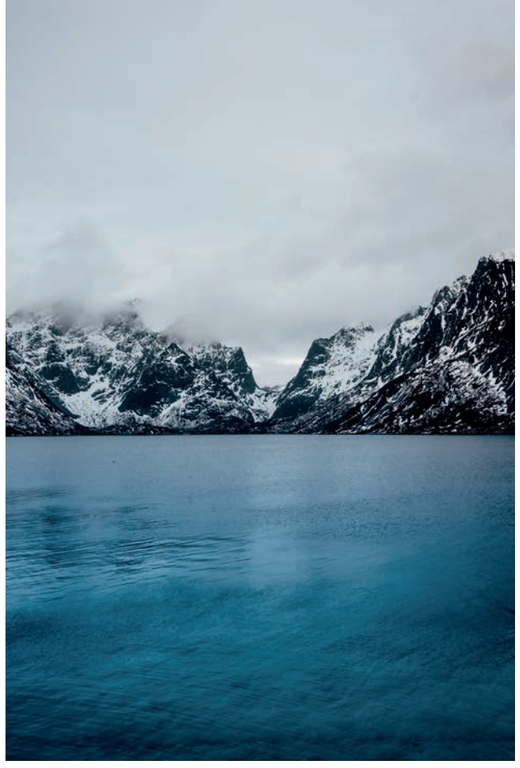

FJORD

Sophistication made simple. FJORD is one embellished piece that is creatively designed and intricately crafted for a unique appeal. Its standout feature is an external drawer that cleverly conceals a discreet second internal drawer. This innovative hidden and fully extendable, internal drawer with soft-close system provides a unique solution for storage of your personal items. Striking the perfect balance between contemporary design and innovation, FJORD modern chamfered edge and choices from countertops and integrated ceramic basins will add character to your bathroom.

Unit Options

50cm
Wall Hung
Two Drawer
(One Concealed)

60cm
Wall Hung
Two Drawer
(One Concealed)

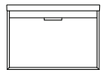

80cm
Wall Hung
Two Drawer
(One Concealed)

60cm
Wall Hung
Countertop
Two Drawer
(One Concealed)

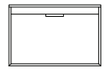

80cm
Wall Hung
Countertop
Two Drawer
(One Concealed)

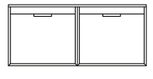

120cm
Wall Hung Countertop
Four Drawer
(Two Concealed)

Colour Options

Gloss
White

Matt
Black

Cashmere Pink
Matt

Ocean Blue
Matt

Khaki
Matt

Midnight Grey
Matt

Handle Options

Brushed
Chrome

Matt
Black

Brushed
Gold

NEW
Brushed
Nickel

Concealed Drawer

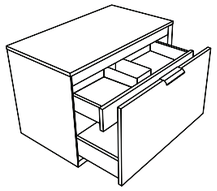

Ceramic Basin

Concealed 2nd Drawer

50cm · 2 Drawer · Ocean Blue Matt

60cm · Countertop · 2 Drawer · Night Sky Blue Matt

80cm · 2 Drawer · Gloss White

120cm · Countertop · 4 Drawer · Khaki Matt

FJORD \ 50cm

Two Drawer

Ceramic basin
2 soft close drawers
(One Concealed)
W500 x D380mm
Short Projection
£645

	Brushed Chrome Handle	Matt Black Handle	Brushed Gold Handle	Brushed Nickel Handle
Gloss White	CFJ50WH	BFJ50WH	GFJ50WH	UF1674
Matt Black	UF1082	UF1083	UF1084	UF1675
Cashmere Pink Matt	UF1079	UF1080	UF1081	UF1676
Ocean Blue Matt	CFJ50OB	BFJ50OB	GFJ50OB	UF1677
Khaki Matt	CFJ50KH	BFJ50KH	GFJ50KH	UF1678
Midnight Grey Matt	CFJ50MN	BFJ50MN	GFJ50MN	UF1679

FJORD \ 60cm

Two Drawer

Ceramic basin
2 soft close drawers
(One Concealed)
W600 x D450mm
£725

	Brushed Chrome Handle	Matt Black Handle	Brushed Gold Handle	Brushed Nickel Handle
Gloss White	CFJ60WH	BFJ60WH	GFJ60WH	UF1680
Matt Black	UF1088	UF1089	UF1090	UF1681
Cashmere Pink Matt	UF1085	UF1086	UF1087	UF1682
Ocean Blue Matt	CFJ60OB	BFJ60OB	GFJ60OB	UF1683
Khaki Matt	CFJ60KH	BFJ60KH	GFJ60KH	UF1684
Midnight Grey Matt	CFJ60MN	BFJ60MN	GFJ60MN	UF1685

Two Drawer \ Countertop

2 soft close drawers
(One Concealed)
W600 x D450mm
£725

Gloss White	CFJ60CTWH	BFJ60CTWH	GFJ60CTWH	UF1686
Matt Black	UF1094	UF1095	UF1096	UF1687
Cashmere Pink Matt	UF1091	UF1092	UF1093	UF1688
Ocean Blue Matt	CFJ60CTOB	BFJ60CTOB	GFJ60CTOB	UF1689
Khaki Matt	CFJ60CTKH	BFJ60CTKH	GFJ60CTKH	UF1690
Midnight Grey Matt	CFJ60CTMN	BFJ60CTMN	GFJ60CTMN	UF1691

All Measurements in mm. All Prices include VAT

FJORD \ 80cm

Two Drawer

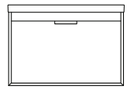

Ceramic basin
2 soft close drawers
(One Concealed)
W800 x D450mm
£825

	Brushed Chrome Handle	Matt Black Handle	Brushed Gold Handle	Brushed Nickel Handle
Gloss White	CFJ80WH	BFJ80WH	GFJ80WH	UF1692
Matt Black	UF1100	UF1101	UF1102	UF1693
Cashmere Pink Matt	UF1097	UF1098	UF1099	UF1694
Ocean Blue Matt	CFJ80OB	BFJ80OB	GFJ80OB	UF1695
Khaki Matt	CFJ80KH	BFJ80KH	GFJ80KH	UF1696
Midnight Grey Matt	CFJ80MN	BFJ80MN	GFJ80MN	UF1697

Two Drawer \ Countertop

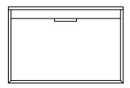

2 soft close drawers
(One Concealed)
W800 x D450mm
£825

Gloss White	CFJ80CTWH	BFJ80CTWH	GFJ80CTWH	UF1698
Matt Black	UF1106	UF1107	UF1108	UF1699
Cashmere Pink Matt	UF1103	UF1104	UF1105	UF1700
Ocean Blue Matt	CFJ80CTOB	BFJ80CTOB	GFJ80CTOB	UF1701
Khaki Matt	CFJ80CTKH	BFJ80CTKH	GFJ80CTKH	UF1702
Midnight Grey Matt	CFJ80CTMN	BFJ80CTMN	GFJ80CTMN	UF1703

FJORD \ 120cm

Four Drawer \ Countertop

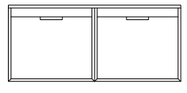

4 soft close drawers
(Two Concealed)
W1200 x D450mm
£1420

	Brushed Chrome Handle	Matt Black Handle	Brushed Gold Handle	Brushed Nickel Handle
Gloss White	UF1109	UF1110	UF1111	UF1704
Matt Black	UF1124	UF1125	UF1126	UF1705
Cashmere Pink Matt	UF1121	UF1122	UF1123	UF1706
Ocean Blue Matt	UF1118	UF1119	UF1120	UF1707
Khaki Matt	UF1112	UF1113	UF1114	UF1708
Midnight Grey Matt	UF1115	UF1116	UF1117	UF1709

NOTE: *Price for Countertop Unit does not include Countertop Basin*

Taps Not Included See Pages page 172 - 204

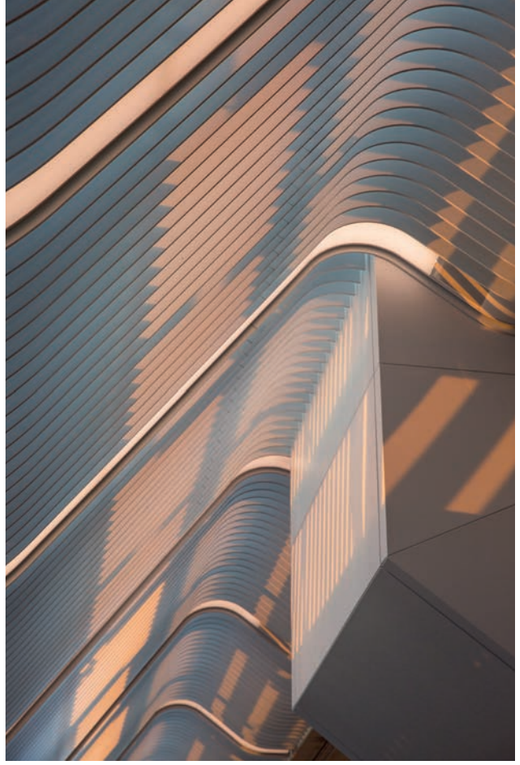

ARC

Rounded front, soft lines, and arched shapes – the ARC Collection embodies all of these design elements of en vogue curved furniture. Gentle shapes inject an indulgent, soothing element to your home, that invites you to unwind and relax. Characterised by its gentle curved design, ARC will fit harmoniously in your bathroom. For those who seek simplicity in design, the integrated ARC handles are the perfect choice. ARC units feature an integrated sculpted matt solid surface basin, comprising of natural materials with resin as a binding agent. This stunning curved basin personifies the Scandinavian design perfectly.

Unit Options

60cm
Wall Hung
Two Drawer

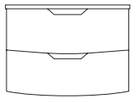

80cm
Wall Hung
Two Drawer

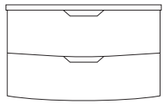

100cm
Wall Hung
Two Drawer

Colour Options

White
Matt

Matt
Black

Cashmere Pink
Matt

Morning Sky Blue
Matt

Ocean Blue
Matt

Night Sky Blue
Matt

Arctic Grey
Matt

Curved Front

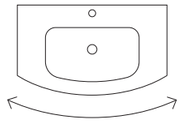

Resin Basin

Soft Close

60cm · 2 Drawer · Arctic Grey Matt

100cm · 2 Drawer · Matt Black

80cm · 2 Drawer · Ocean Blue Matt

ARC \ 60cm

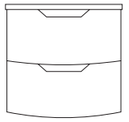

Resin basin
2 soft close drawers
W600 x D460mm
£795

White Matt	UF0359
Matt Black	UF0694
Cashmere Pink Matt	UF0693
Morning Sky Blue Matt	UF0357
Ocean Blue Matt	UF0355
Night Sky Blue Matt	UF0356
Arctic Grey Matt	UF0358

ARC \ 80cm

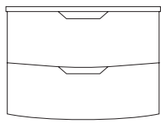

Resin basin
2 soft close drawers
W800 x D460mm
£895

White Matt	UF0364
Matt Black	UF0696
Cashmere Pink Matt	UF0695
Morning Sky Blue Matt	UF0362
Ocean Blue Matt	UF0360
Night Sky Blue Matt	UF0361
Arctic Grey Matt	UF0363

ARC \ 100cm

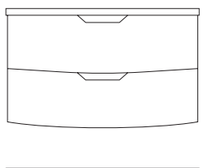

Resin basin
2 soft close drawers
W1000 x D460mm
£995

White Matt	UF0369
Matt Black	UF0698
Cashmere Pink Matt	UF0697
Morning Sky Blue Matt	UF0367
Ocean Blue Matt	UF0365
Night Sky Blue Matt	UF0366
Arctic Grey Matt	UF0368

See Pages 70 - 71 for Coordinating
Wall Columns, WC Units & Bath Panels

See Pages 102 - 119
for Matching Mirror Ranges

See Pages 274 - 279
for NEW Coordinating Wetroom Panels

Taps Not Included See Pages page 172 - 204

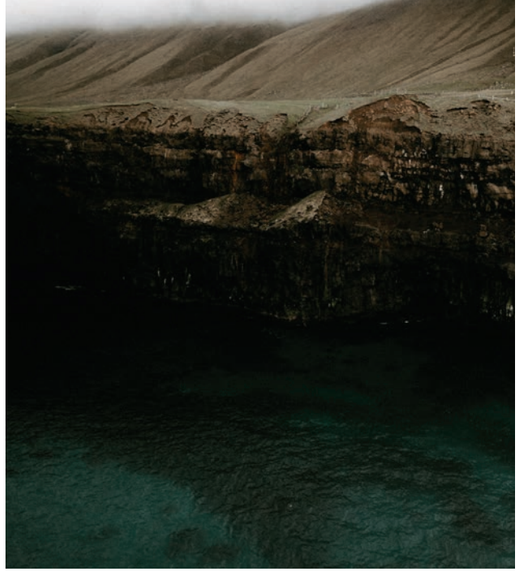

VÁGAR

Showcasing generous proportions and a full width Chrome handle, VÁGAR provides a durable solution for your bathroom storage needs. Available exclusively in wall hung style, this vanity unit features a single large drawer giving ample depth for all your bathroom essentials in addition to its soft close mechanism. VÁGAR's minimal style is sure to appeal those seeking generous wash space and flair within their bathroom suite.

Unit Options

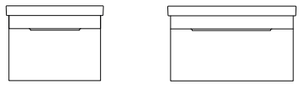

60cm
Wall Hung
Single Drawer

80cm
Wall Hung
Single Drawer

Colour Options

Gloss White

Ocean Blue Matt

Night Sky Blue Matt

Khaki Matt

Arctic Grey Matt

Dolphin Grey Matt

All Measurements in mm. All Prices include VAT

VÁGAR \ 60cm

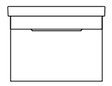

Ceramic basin
W600 x D460mm
1 soft close drawer
£625

Gloss White	VAG60WH
Ocean Blue Matt	VAG60OB
Night Sky Blue Matt	VAG60NB
Khaki Matt	VAG60KH
Arctic Grey Matt	VAG60AG
Dolphin Grey Matt	VAG60DG

VÁGAR \ 80cm

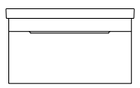

Ceramic basin
W800 x D460mm
1 soft close drawer
£725

Gloss White	VAG80WH
Ocean Blue Matt	VAG80OB
Night Sky Blue Matt	VAG80NB
Khaki Matt	VAG80KH
Arctic Grey Matt	VAG80AG
Dolphin Grey Matt	VAG80DG

Taps Not Included See Pages page 172 - 204

SKÅL

Elegant and bold – the stylish dual-tone SKÅL countertop basin sits proudly on your selected countertop vanity unit. The organic shapes and ultra-sleek profile are achieved by Solid Surface, a natural resin material, with a silky-smooth touch and matt finish. SKÅL Basin showcases a modern, cutting-edge aesthetic. With the resin material, SKÅL embraces new forms - round, oval and rectangular. The palette is chosen to coordinate with the colours in the Scandinavian furniture collection. SKÅL spectrum of shades adds a touch of sophistication to your bathroom. Complete your look with our range of contemporary Freestanding or Wall Mounted Basin Mixers.

Basin Options

Round

Oval

Rectangle

Colour Options

White Matt

Matt Black

Cashmere Pink Matt

Morning Sky Blue Matt

Ocean Blue Matt

Night Sky Blue Matt

Coral Green Matt

Khaki Matt

Arctic Grey Matt

Midnight Grey Matt

SKÅL · Round · Khaki Matt

SKÅL · Oval · Ocean Blue

SKÅL · Rectangle · Night Sky Blue

SKÅL · Round · Cashmere Pink

SKÅL · Round · Matt Black

SKÅL

Round

Ø400 x H150mm

White Matt		UF0421	£295	Night Sky Blue Matt		UF0425	£399
Matt Black		UF1246	£399	Coral Green Matt		UF1247	£399
Cashmere Pink Matt		UF0580	£399	Khaki Matt		UF0423	£399
Morning Sky Blue Matt		UF0581	£399	Arctic Grey Matt		UF0422	£399
Ocean Blue Matt		UF0424	£399	Midnight Grey Matt		UF0426	£399

Oval

W600 x H120 x D350mm

White Matt		UF0427	£395	Night Sky Blue Matt		UF0431	£495
Matt Black		UF1244	£495	Coral Green Matt		UF1245	£495
Cashmere Pink Matt		UF0582	£495	Khaki Matt		UF0429	£495
Morning Sky Blue Matt		UF0583	£495	Arctic Grey Matt		UF0428	£495
Ocean Blue Matt		UF0430	£495	Midnight Grey Matt		UF0432	£495

Rectangle

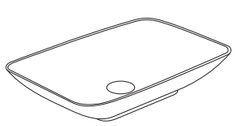

W600 x H120 x D400mm

White Matt		UF0433	£415	Night Sky Blue Matt		UF0437	£515
Matt Black		UF1248	£515	Coral Green Matt		UF1249	£515
Cashmere Pink Matt		UF0584	£515	Khaki Matt		UF0435	£515
Morning Sky Blue Matt		UF0585	£515	Arctic Grey Matt		UF0434	£515
Ocean Blue Matt		UF0436	£515	Midnight Grey Matt		UF0438	£515

All Measurements in mm. All Prices include VAT

Taps Not Included See Pages page 172 - 204

A Match *Made in Heaven*

Experience true colour coordination in your bathroom with our range of matching furniture - Whether you're looking for bath panels, wall columns, or WC units, you can choose from a range of colours that harmoniously coordinate with our Scandinavian ranges.

Universal Wall Columns

Space Saving
Short Projection
Four shelves
Soft Close Doors
W300 x D240 x H1500mm
£525

Gloss White
UF0139

White Matt
UF0373

Matt Black
UF0502

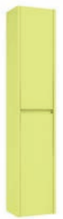

Sun Kissed Yellow Matt
UF0503

Cashmere Pink Matt
UF0375

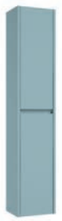

Morning Sky Blue Matt
UF0374

Ocean Blue Matt
UF0137

Night Sky Blue Matt
UF0264

Khaki Matt
UF0138

Coral Green Matt
UF0376

Wreath Green Matt
UF0377

Arctic Grey Matt
UF0140

Dolphin Grey Matt
UF0096

Midnight Grey Matt
UF0141

WC Units

Back to Wall WC Unit
with dual flush concealed cistern & chrome flush button
W500 x D250 x H800mm
WC not included
£425

Gloss White	UF1160	Night Sky Blue Matt	UF1166
White Matt	UF1161	Khaki Matt	UF1167
Matt Black	UF1162	Coral Green Matt	UF1168
Cashmere Pink Matt	UF1163	Wreath Green Matt	UF1169
Morning Sky Blue Matt	UF1164	Arctic Grey Matt	UF1170
Ocean Blue Matt	UF1165	Midnight Grey Matt	UF1171

Please Note Back to Wall WC Units are only suitable for **standard height** Back to Wall WCs

Flush Button Upgrades
£25

Matt Black	USW0416
Brushed Gold	USW0417
Brushed Nickel	USW0418

Bath Panels

	FRONT PANELS		END PANELS		
	1700	1800	700	750	800
	£245	£255	£125	£140	£140
Gloss White	UF0187	UF0194	UF0201	UF0208	UF0215
White Matt	UF0378	UF0383	UF0388	UF0393	UF0398
Matt Black	UF0504	UF0505	UF0506	UF0507	UF0508
Sun Kissed Yellow Matt	UF0509	UF0510	UF0511	UF0512	UF0513
Cashmere Pink Matt	UF0380	UF0385	UF0390	UF0395	UF0400
Morning Sky Blue Matt	UF0379	UF0384	UF0389	UF0394	UF0399
Ocean Blue Matt	UF0181	UF0188	UF0195	UF0202	UF0209
Night Sky Blue Matt	UF0182	UF0189	UF0196	UF0203	UF0210
Khaki Matt	UF0186	UF0193	UF0200	UF0207	UF0214
Coral Green Matt	UF0381	UF0386	UF0391	UF0396	UF0401
Wreath Green Matt	UF0382	UF0387	UF0392	UF0397	UF0402
Arctic Grey Matt	UF0185	UF0192	UF0199	UF0206	UF0213
Dolphin Grey Matt	UF0184	UF0191	UF0198	UF0205	UF0212
Midnight Grey Matt	UF0183	UF0190	UF0197	UF0204	UF0211

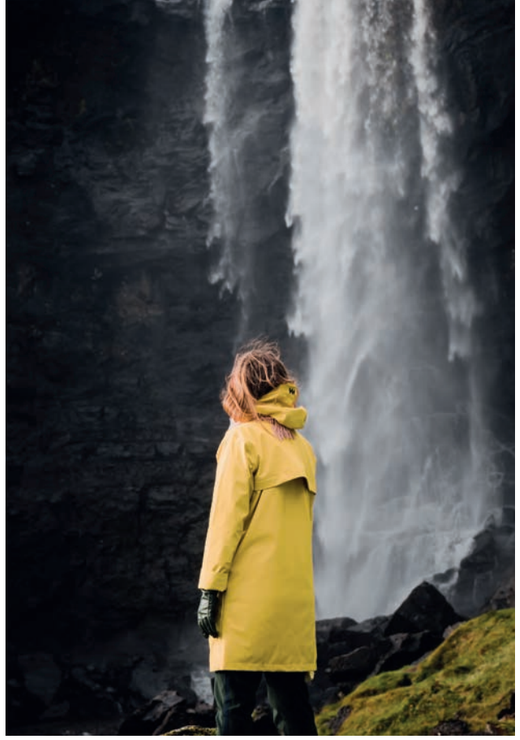

KORA

With rounded edges and robust handles, this solid and compact design from 50 - 60cm width makes it ideal for mid-sized bathrooms. With a range of attractive colours, KORA can create a cheerful bright feeling in your space. The deep drawers offer ample storage, maximising the usable space with a U-shape design on the top drawer. The classic monochrome look can be achieved with the Matt Black handle or an option of the ever-popular Chrome finish. The choice is yours.

Unit Options

50cm
Wall Hung
Two Drawer

50cm
Floorstanding
Two Drawer

60cm
Wall Hung
Two Drawer

60cm
Floorstanding
Two Drawer

Colour Options

Gloss
White

Matt
Black

Morning Sky Blue
Matt

Arctic Grey
Matt

Sun Kissed Yellow
Matt

Handle Options

Brushed
Chrome

Matt
Black

50cm · Wall Hung · 2 Drawer · Arctic Grey Matt

Chrome Handle

Matt Black Handle

50cm · Wall Hung · 2 Drawer · Morning Sky Blue Matt

50cm · Floorstanding · 2 Drawer · Sun Kissed Yellow Matt

60cm · Floorstanding · 2 Drawer · Gloss White

KORA \ 50cm

Wall Hung

Ceramic basin
W500 x D460mm
2 soft close drawers
£695

	Chrome Handle	Matt Black Handle
Gloss White	UF0462	UF0482
Matt Black	UF0463	UF0483
Sun Kissed Yellow Matt	UF0464	UF0484
Morning Sky Blue Matt	UF0466	UF0486
Arctic Grey Matt	UF0465	UF0485

Floorstanding

Ceramic basin
W500 x D460mm
2 soft close drawers
£745

	Chrome Handle	Matt Black Handle
Gloss White	UF0472	UF0492
Matt Black	UF0473	UF0493
Sun Kissed Yellow Matt	UF0474	UF0494
Morning Sky Blue Matt	UF0476	UF0496
Arctic Grey Matt	UF0475	UF0495

KORA \ 60cm

Wall Hung

Ceramic basin
W600 x D460mm
2 soft close drawers
£745

	Chrome Handle	Matt Black Handle
Gloss White	UF0467	UF0487
Matt Black	UF0468	UF0488
Sun Kissed Yellow Matt	UF0469	UF0489
Morning Sky Blue Matt	UF0471	UF0491
Arctic Grey Matt	UF0470	UF0490

Floorstanding

Ceramic basin
W600 x D460mm
2 soft close drawers
£795

	Chrome Handle	Matt Black Handle
Gloss White	UF0477	UF0497
Matt Black	UF0478	UF0498
Sun Kissed Yellow Matt	UF0479	UF0499
Morning Sky Blue Matt	UF0481	UF0501
Arctic Grey Matt	UF0480	UF0500

Wall Column \ 30cm

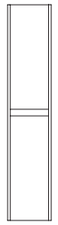

Space Saving
Short Projection
Four shelves
Soft Close Doors
W300 x D240 x H1500mm
£525

Gloss White	*UF0139*
Matt Black	UF0502
Sun Kissed Yellow Matt	UF0503
Morning Sky Blue Matt	UF0374
Arctic Grey Matt	UF0140

See Pages 70 - 71 for Coordinating Bath Panels

All Measurements in mm. All Prices include VAT

Taps Not Included See Pages page 172 - 204

CHARM

45cm Cloakroom Unit

Gloss White

Matt Green

Matt Green

Gloss White

Wall Hung £375

Chrome handle
1 soft close door
W450 x D280mm

Gloss White WCH01WH

Matt Green WCH01MG

Floorstanding £405

Chrome handle
1 soft close door
W450 x D280mm

Gloss White FCH01WH

Matt Green FCH01MG

BRAVA

Gloss White · Nature White · Nature Grey · Smokey Matt

80cm · Floorstanding · White

80cm · Wall Hung · Nature White

80cm · Wall Hung · Nature Grey

All Measurements in mm. All Prices include VAT

Taps Not Included See Pages page 172 - 204

BRAVA

60cm Wall Hung

2 soft close drawers
W600 x D460mm
£705

Gloss White	SLMBR602DWH	Nature Grey	SLMBR602DNG
Nature White	SLMBR602DNWH	Smokey Matt	SLMBR602DSMG

60cm Floorstanding

3 soft close drawers
W600 x D460mm
£895

Gloss White	SLFBWH3DR60	Nature Grey	SLFBNG3DR60
Nature White	SLFBNWH3DR60	Smokey Matt	SLFBSMG3DR60

80cm Wall Hung

2 soft close drawers
W800 x D460mm
£820

Gloss White	SLMBR802DWH	Nature Grey	SLMBR802DNG
Nature White	SLMBR802DNWH	Smokey Matt	SLMBR802DSMG

80cm Floorstanding

3 soft close drawers
W800 x D460mm
£960

Gloss White	SLFBWH3DR80	Nature Grey	SLFBNG3DR80
Nature White	SLFBNWH3DR80	Smokey Matt	SLFBSMG3DR80

100cm Wall Hung

2 soft close drawers
W1000 x D460mm
£1050

Gloss White	SLMBR1002DWH	Nature Grey	SLMBR1002DNG
Nature White	SLMBR1002DNWH	Smokey Matt	SLMBR1002DSMG

120cm Wall Hung

4 soft close drawers
W1200 x D460mm
£1775

Gloss White	SLMBR1202DWH	Nature Grey	SLMBR1202DNG
Nature White	SLMBR1202DNWH	Smokey Matt	SLMBR1202DSMG

30cm Wall Column

2 soft close drawers
W300 x H1500 x D240mm
£580

Gloss White	ROYTWCWH	Nature Grey	125659
Nature White	125661	Smokey Matt	129808

All Measurements in mm. All Prices include VAT

Taps Not Included See Pages page 172 - 204

DIJON

Gloss White

Samara Ash

90cm · Gloss White

100cm · Samara Ash

All Measurements in mm. All Prices include VAT

Taps Not Included See Pages page 172 - 204

45cm Cloakroom Pack · Wall Hung · Gloss White

DIJON

45cm Wall Hung Cloakroom Pack

Vanity unit, washbasin & mirror
1 soft close door
W465 x D275mm
£440

Gloss White	125140
Samara Ash	125143

45cm Floorstanding Cloakroom Pack

Vanity unit, washbasin & mirror
1 soft close door
W465 x D275mm
£495

Gloss White	125319
Samara Ash	125322

60cm Wall Hung

2 soft close drawers
W600 x D460mm
£705

Gloss White	SLMDJ602DWH
Samara Ash	SLMDJ602DSH

80cm Wall Hung

2 soft close drawers
W800 x D460mm
£820

Gloss White	SLMDJ802DWH
Samara Ash	SLMDJ802DSH

90cm Wall Hung

2 soft close drawers
1 soft close door
W900 x D460mm
£1120

Gloss White	SLMDJ902DWH
Samara Ash	SLMDJ902DSH

100cm Wall Hung

2 soft close drawers
W1000 x D460mm
£1050

Gloss White	SLMDJ1002DWH
Samara Ash	SLMDJ1002DSH

30cm Wall Column

2 soft close doors
W300 x H1500 x D240mm
£560

Gloss White	124895
Samara Ash	123520

All Measurements in mm. All Prices include VAT

Taps Not Included See Pages page 172 - 204

SMART

Gloss White · Sandy Grey · Gloss Grey

80cm · Wall Hung · Gloss Grey

Sandy Grey

30cm Wall Column · Gloss White

All Measurements in mm. All Prices include VAT

SMART

60cm Wall Hung Two Drawer

2 soft close drawers
W600 x D460mm

Gloss White	SLSM60WH	£560
Sandy Grey	SLSM60SG	£560
Gloss Grey	SLSM60GG	£560

60cm Wall Hung Two Door

2 soft close doors
W600 x D460mm

Gloss White	SLSM602WH	£475
Sandy Grey	SLSM602SG	£475
Gloss Grey	SLSM602GG	£475

80cm Wall Hung Two Drawer

2 soft close drawers
W800 x D460mm

Gloss White	SLSM80WH	£645
Sandy Grey	SLSM80SG	£645
Gloss Grey	SLSM80GG	£645

120cm Wall Hung Four Drawer

4 soft close drawers
W1200 x D460mm

Gloss White	SLSM120WH	£1365
Sandy Grey	SLSM120SG	£1365
Gloss Grey	SLSM120GG	£1365

30cm Wall Column

2 soft close doors
W300 x H1500 x D240mm

Gloss White	125073	£495
Sandy Grey	125075	£495
Gloss Grey	125074	£495

Taps Not Included See Pages page 172 - 204

PARIS

50cm Wall Hung Vanity Pack

Gloss White · Sandy Grey · Gloss Grey

Wall Hung Two Drawer

Vanity unit, washbasin & mirror
W500 x D350mm

Gloss White	123150	**£580**
Sandy Grey	123152	**£580**
Gloss Grey	123151	**£580**

Wall Hung Two Door

Vanity unit, washbasin & mirror
W500 x D350mm

Gloss White	123154	**£490**
Sandy Grey	123156	**£490**
Gloss Grey	123155	**£490**

All Measurements in mm. All Prices include VAT

PRAGUE

45cm Vanity Pack

Gloss White · Sandy Grey · Gloss Grey

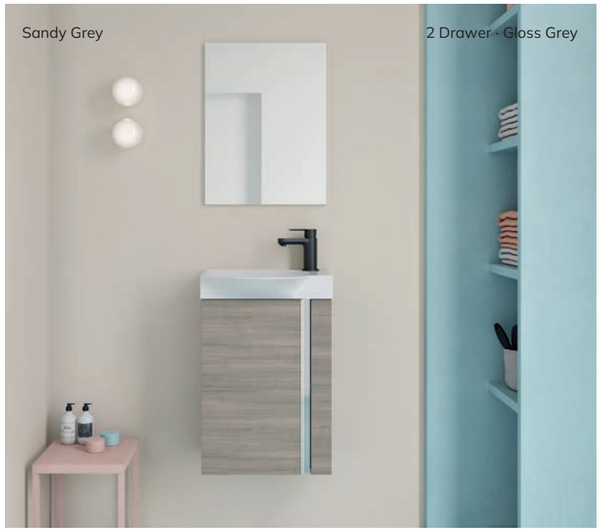

Wall Hung

Vanity unit, washbasin & mirror
W450 x D350mm

Gloss White	122910	**£470**
Sandy Grey	122914	**£470**
Gloss Grey	122915	**£470**

Floorstanding

Vanity unit, washbasin & mirror
W450 x D350mm

Gloss White	*123427*	**£515**
Sandy Grey	*123429*	**£515**
Gloss Grey	*123428*	**£515**

Taps Not Included See Pages page 172 - 204

OTTO PLUS

Gloss White · Craft Oak · Light Gloss Grey · Gloss Grey

Gloss Grey · Standard Depth D460mm

Craft Oak · Short Projection D395mm

Light Gloss Grey · Standard Depth D460mm

Light Gloss Grey · Short Projection D395mm

All Measurements in mm. All Prices include VAT

Taps Not Included See Pages page 172 - 204

OTTO PLUS — Short Projection

50cm Wall Hung — Depth: **395mm**

Two Door
W520 x D395mm

Gloss White	ELTO2D50WH	**£360**	Light Grey Gloss	ELTO2D50LG	**£399**
Craft Oak*	ELTO2D50CO	**£360**	Gloss Grey	ELTO2D50GG	**£399**

Two Drawer
W520 x D395mm

Gloss White	ELTOP50WH	**£450**	Light Grey Gloss	ELTOP50LG	**£485**
Craft Oak*	ELTOP50CO	**£450**	Gloss Grey	ELTOP50GG	**£485**

50cm Floorstanding — Depth: **395mm**

Two Door
W520 x D395mm

Gloss White	ELTPOR50WH	**£475**	Light Grey Gloss	ELTPOR50LG	**£535**
Craft Oak*	ELTPOR50CO	**£475**	Gloss Grey	ELTPOR50GG	**£535**

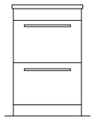

Two Drawer
W520 x D395mm

Gloss White	ELTCAR50WH	**£545**	Light Grey Gloss	ELTCAR50LG	**£599**
Craft Oak*	ELTCAR50CO	**£545**	Gloss Grey	ELTCAR50GG	**£599**

60cm Wall Hung — Depth: **395mm**

Two Door
W615 x D395mm

Gloss White	ELTO2D60WH	**£399**	Light Grey Gloss	ELTO2D60LG	**£450**
Craft Oak*	ELTO2D60CO	**£399**	Gloss Grey	ELTO2D60GG	**£450**

Two Drawer
W615 x D395mm

Gloss White	ELTOP60WH	**£485**	Light Grey Gloss	ELTOP60LG	**£535**
Craft Oak*	ELTOP60CO	**£485**	Gloss Grey	ELTOP60GG	**£535**

60cm Floorstanding — Depth: **395mm**

Two Door
W615 x D395mm

Gloss White	ELTPOR60WH	**£535**	Light Grey Gloss	ELTPOR60LG	**£585**
Craft Oak*	ETPOR60CO	**£535**	Gloss Grey	ELTPOR60GG	**£585**

Two Drawer
W615 x D395mm

Gloss White	ELTCAR60WH	**£599**	Light Grey Gloss	ELTCAR60LG	**£665**
Craft Oak*	ELTCAR60CO	**£599**	Gloss Grey	ELTCAR60GG	**£665**

*Craft Oak comes with Black Handles

All Measurements in mm. All Prices include VAT

OTTO PLUS — Standard Projection

60cm Wall Hung — Depth: **460mm**

Two Door
W615 x D460mm

Gloss White	2DWOP60WH	**£399**	Light Grey Gloss	2DWOP60LG	**£450**
Craft Oak*	2DWOP60CO	**£399**	Gloss Grey	2DWOP60GG	**£450**

Two Drawer
W615 x D460mm

Gloss White	DRWOP60WH	**£485**	Light Grey Gloss	DRWOP60LG	**£535**
Craft Oak*	DRWOP60CO	**£485**	Gloss Grey	DRWOP60GG	**£535**

60cm Floorstanding — Depth: **460mm**

Two Door
W615 x D460mm

Gloss White	F2D60OPWH	**£535**	Light Grey Gloss	F2D60OPLG	**£585**
Craft Oak*	F2D60OPCO	**£535**	Gloss Grey	F2D60OPGG	**£585**

Two Drawer
W615 x D460mm

Gloss White	DRF60OPWH	**£599**	Light Grey Gloss	DRF60OPLG	**£665**
Craft Oak*	DRF60OPCO	**£599**	Gloss Grey	DRF60OPGG	**£665**

45cm Mirror Cabinet

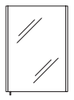

1 soft close door
W420 x H620 x D140mm

Gloss White	ELTOP2250WH	**£225**	Light Grey Gloss	ELTOP2250LG	**£245**
Craft Oak	ELTOP2250CO	**£225**	Gloss Grey	ELTOP2250GG	**£245**

60cm Mirror Cabinet

2 soft close doors
W600 x H620 x D140mm

Gloss White	ELTOP2260WH	**£280**	Light Grey Gloss	ELTOP2260LG	**£295**
Craft Oak	ELTOP2260CO	**£280**	Gloss Grey	ELTOP2260GG	**£295**

30cm Wall Column

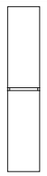

2 soft close doors
W300 x H1366 x D250mm

Gloss White	UF0239	**£320**	Light Grey Gloss	UF0241	**£350**
Craft Oak	UF0242	**£320**	Gloss Grey	UF0240	**£350**

Back To Wall WC Unit

with dual flush concealed cistern, push button
W600 x H800 x D255mm
WC not included

Gloss White	ELTBTWPCWH	**£399**	Light Grey Gloss	ELTBTWPCLG	**£485**
Craft Oak	ELTBTWPCCO	**£399**	Gloss Grey	ELTBTWPCGG	**£485**

Please Note Back to Wall WC Units are only suitable for **standard height** Back to Wall WCs

Taps Not Included See Pages page 172 - 204

BRISTOL

Gloss White · Cool Grey · Steel Grey · Graphite

Cool Grey

55cm Floorstanding

Ceramic basin
2 soft close doors
W550 x D440mm

£405

Gloss White	BR55WH
Cool Grey	BR55CG
Steel Grey	BR55SG
Graphite	BR65GR

65cm Floorstanding

Ceramic basin
2 soft close doors
W650 x D440mm

£495

Gloss White	BR65WH
Cool Grey	BR65CG
Steel Grey	BR65SG
Graphite	BR65GR

All Measurements in mm. All Prices include VAT

BASLE

Space Saving Cloakroom Unit

Gloss White · Light Gloss Grey · Grey Gloss · Black Gloss · Craft Oak

Grey Gloss

Single Door Floorstanding

with push open-close mechanism
Ceramic basin *(Left or right hand)*
W400 x H860 x D225mm

Gloss White	BASWH	**£250**
Light Grey Gloss	BASLGG	**£260**
Grey Gloss	BASGG	**£260**
Black Gloss	BASBK	**£260**
Craft Oak	BASCO	**£250**

Taps Not Included See Pages page 172 - 204

BELMONT SQUARE

Short Projection

Gloss White · Light Gloss Grey · Grey Gloss

60cm · 2 Door · Gloss Grey

60cm · 2 Drawer · Gloss Grey

60cm · 3 Drawer Light Gloss Grey

All Measurements in mm. All Prices include VAT

BELMONT Square — Short Projection

50cm — Depth: **395mm**

2 soft close drawers
1 tap hole ceramic basin
W500 x H820 x D395mm

Gloss White	UF0257	**£515**
Light Grey Gloss	UF0256	**£535**
Gloss Grey	UF0255	**£535**

2 soft close doors
1 tap hole ceramic basin
W500 x H820 x D395mm

Gloss White	SQBEL50WH	**£360**
Light Grey Gloss	SQBEL50LG	**£380**
Gloss Grey	SQBEL50GG	**£380**

60cm — Depth: **395mm**

2 soft close drawers
1 tap hole ceramic basin
W600 x H820 x D395mm

Gloss White	UF0260	**£535**
Light Grey Gloss	UF0259	**£560**
Gloss Grey	UF0258	**£560**

2 soft close doors
1 tap hole ceramic basin
W600 x H820 x D395mm

Gloss White	SQBEL60WH	**£370**
Light Grey Gloss	SQBEL60LG	**£395**
Gloss Grey	SQBEL60GG	**£395**

3 soft close drawers
1 tap hole ceramic basin
W600 x H820 x D395mm

Gloss White	UF0263	**£560**
Light Grey Gloss	UF0262	**£585**
Gloss Grey	UF0261	**£585**

30cm Wall Column

2 soft close doors
W300 x H1366 x D250mm

Gloss White	UF0239	**£315**
Light Grey Gloss	UF0241	**£350**
Gloss Grey	UF0240	**£350**

Taps Not Included See Pages page 172 - 204

BELMONT

Gloss White · Light Gloss Grey · Grey Gloss

65cm · Gloss Grey

65cm · Gloss White

65cm · Light Gloss Grey

All Measurements in mm. All Prices include VAT

BELMONT

45cm Unit

1 soft close door
1 tap hole ceramic basin
W455 x H820 x D370mm

Gloss White	ELTBEL45	£235
Light Grey Gloss	ELTBEL45LG	£250
Gloss Grey	ELTBEL45GG	£250

55cm Unit

2 soft close doors
1 tap hole ceramic basin
W560 x H820 x D440mm

Gloss White	ELTBEL55	£250
Light Grey Gloss	ELTBEL55LG	£295
Gloss Grey	ELTBEL55GG	£295

65cm Unit

2 soft close doors
1 tap hole ceramic basin
W655 x H820 x D470mm

Gloss White	ELTBEL65	£295
Light Grey Gloss	ELTBEL65LG	£340
Gloss Grey	ELTBEL65GG	£340

75cm Unit

3 soft close doors
2 soft close drawers
1 tap hole ceramic basin
W755 x H820 x D490mm

Gloss White	ELTBEL75	£395
Light Grey Gloss	ELTBEL75LG	£440
Gloss Grey	ELTBEL75GG	£440

85cm Unit

3 soft close doors, 2 soft close drawers
1 tap hole ceramic basin
W850 x H820 x D500mm

Gloss White	ELTBEL85	£440
Light Grey Gloss	ELTBEL85LG	£500
Gloss Grey	ELTBEL85GG	£500

30cm Wall Column

2 soft close doors
W300 x H1366 x D250mm

Gloss White	UF0239	£315
Light Grey Gloss	UF0241	£350
Gloss Grey	UF0240	£350

35cm Base Unit

1 soft close door
1 soft close drawer
W350 x H765 x D310mm

Gloss White	ELTSU	£235
Light Grey Gloss	ELTSULG	£250
Gloss Grey	ELTSUGG	£250

WC Unit

Includes: dual flush concealed cistern push button. W500 x H765 x D310mm
[not including depth of wc].
WC not included

Gloss White	ELTBTWCON	£360
Light Grey Gloss	ELTBTWCONLG	£399
Gloss Grey	ELTBTWCONGG	£399

Please Note Back to Wall WC Units are only suitable for **standard height** Back to Wall WCs

Taps Not Included See Pages page 172 - 204

KINGSTON

Chalk White

Stone

The Kingston range of painted furniture offers timeless elegance to your bathroom. With a choice of washbasins and natural colours the Kingston range offers the perfect balance of practical storage with period charm.

KINGSTON

60cm with Slim Basin

2 door, W600 x D460mm

£670

Chalk White	KIN60WHTOL
Stone	KIN60STTOL

80cm with Slim Basin

2 door, W800 x D460mm

£850

Chalk White	KIN80WHTOL
Stone	KIN80STTOL

Small Storage unit

1 door, W400 x H820 x D330mm

£625

Chalk White	KINS400WH
Stone	KINS400ST

Tall Storage unit

1 door, W350 x H1800 x D330mm

£805

Chalk White	KINT350WH
Stone	KINT350ST

All Measurements in mm. All Prices include VAT

Taps Not Included See Pages page 172 - 204

MIRRORS

Reflect your style with our stunning range of bathroom mirrors and discover the transformative power of a well-designed mirror. Not only do mirrors add functionality to your daily routine, but they also contribute to the overall design and ambiance of your space, reflecting your unique personality.

Our range of mirrors goes beyond the ordinary, offering integrated lighting options that enhance both practicality and aesthetics. Choose from direct lighting for focused illumination or ambient lighting for a subtle and relaxing atmosphere. Illuminate your bathroom in a way that suits your needs and creates the perfect ambiance.

With a variety of shapes and sizes to choose from, our mirrors allow you to find the perfect fit for your bathroom. To truly personalise your space, our mirrors are also available in stylish colours such as matt black and brushed gold, creating a harmonious blend with other fixtures in your bathroom.

Upgrade your bathroom with a mirror that not only serves its purpose but also adds a touch of elegance and sophistication. Transform your space into a reflection of your style and personality. Explore our exquisite range of bathroom mirrors and let your design vision come to life.

Mirror Features Guide

ENERGY EFFICIENT LED
(light-emitting diode) bulbs are more energy efficient and durable than standard light bulbs, often enabling up to 35,000 hours of use.

COLOUR TEMPERATURE CHANGE
A lower colour temperature produces a warmer, more relaxing glow while a higher colour temperature displays a cooler brighter light.

DIRECT LIGHT
Designed with an LED light source facing outward, front-lit mirrors are particularly beneficial for tasks that require precision, such as shaving or makeup application.

AMBIENT
Light is projected indirectly creating a multisensory bathroom experience. The LED source emits a soft, diffused light that helps to create a warm and inviting atmosphere in the space.

TOUCH SWITCH
A mirror feature that allows you to control various functions of a mirror, such as lighting and defogging, with a simple touch on the control buttons.

INGRESS PROTECTION RATING
IP rating refers to the level of protection that electrical and electronic equipment, have against solid particles and water. An IP44 rating means your product is protected from solid particles over 1mm in size and low velocity water sprays.

DEMISTER
The integrated pad that gently warms the mirror's surface, preventing the buildup of steam and condensation, leaving your mirror fog free.

PORTRAIT & LANDSCAPE
Allows you to customize the orientation of your mirror to suit your bathroom layout and design preferences.

BLUETOOTH CONNECTIVITY
Wirelessly connect to other Bluetooth-enabled devices and enjoy your favourite music while you prepare for the day.

USB
USB ports provide a convenient charging solution for your devices such as smartphones and tablets. Allowing you to keep your gadgets powered up while you carry out your daily routine.

SOFT CLOSE
Soft close technology allows cabinet doors to close softly and slowly, preventing them from slamming shut.

ZONES
Bathrooms are divided into zones based on their proximity to water sources. These zones determine what types of appliances are allowed, and to what degree they need to be protected against water.

Bathroom Zones

Bathroom electrical zones are defined areas in a bathroom that determine the type of electrical devices and their installation requirements to ensure safety. These zones are classified based on proximity to water sources

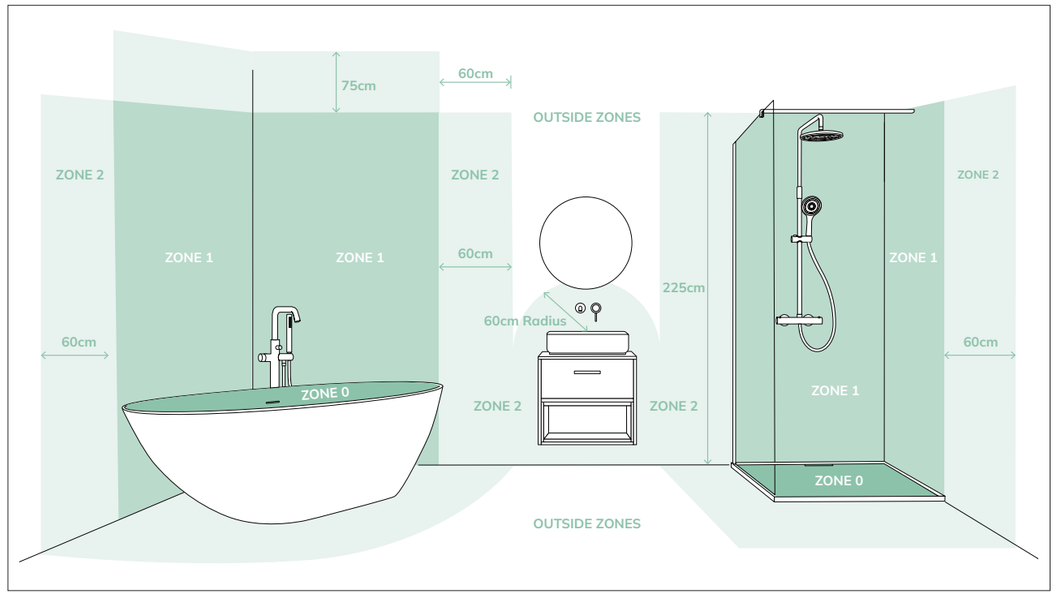

ZONE 0
Represents the areas inside the bath or shower tray.

ZONE 1
Represents the area above the bath or shower tray up to 2.25m.

ZONE 2
Represents the area 60cm outside of Zone 1.

OUTSIDE ZONES
Outside zones represent areas which fall outside of Zone 0, 1 and 2.

ECHO

Welcome to the world of Echo mirrors, where beauty and functionality merge to create a unique and transformative experience for your home. The range features five distinctive shapes: Round, Rectangular, Eclipse, Segment and Arena, each with its character and style. The mirrors create a soft and calming halo of lighting, allowing you to get a clear view of your reflection without any harsh shadows.

Powered by Samsung LEDs, with high performance and high efficiency, they optimise energy consumption making the lighting more sustainable.

So go ahead, choose your mirror, and let the Echo range reflect the best version of you.

ECHO Segment

POWERED BY SAMSUNG LED · AMBIENT · DEMISTER · IP44 · ZONE 2&3

- Suitable for Bathroom Zones 2 & 3
- Energy Efficient LED lights
- Ambient Lighting
- Heated Demister Pad
- IP44 Rated

W800 x H700mm	UM0047	**£495**
W1000 x H900mm	UM0048	**£595**

All Measurements in mm. All Prices include VAT

ECHO Eclipse

POWERED BY SAMSUNG LED · AMBIENT · TOUCH · DEMISTER · IP44 · ZONE 2&3

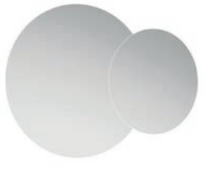

- Suitable for Bathroom Zones 2 & 3
- Energy Efficient LED Lights
- Dimmable Ambient Lighting
- Touch Switch
- Heated Demister Pad
- IP44 Rated

W1150 x H800mm	UM0052	**£695**

ECHO Arena

POWERED BY SAMSUNG LED · AMBIENT · TOUCH · DEMISTER · IP44 · ZONE 2&3

- Suitable for Bathroom Zones 2 & 3
- Energy Efficient LED lights
- Dimmable Ambient Lighting
- Touch Switch
- Heated Demister Pad
- IP44 Rated

Size	Plain	Matt Black	Brushed Gold
W450 x H900mm	UM0049 **£425**	UM0050 **£450**	UM0051 **£450**

ECHO Round

POWERED BY SAMSUNG LED · AMBIENT · TOUCH · DEMISTER · IP44 · ZONE 2&3

- Suitable for Bathroom Zones 2 & 3
- Energy Efficient LED lights
- Dimmable Ambient Lighting
- Touch Switch
- Heated Demister Pad
- IP44 Rated

Size	Plain	Matt Black	Brushed Gold
Ø600mm	UM0059 **£365**	UM0061 **£395**	UM0062 **£395**
Ø800mm	UM0060 **£395**	UM0063 **£445**	UM0064 **£445**

ECHO Rectangle

POWERED BY SAMSUNG LED · AMBIENT · TOUCH · DEMISTER · IP44 · ZONE 2&3

- Suitable for Bathroom Zones 2 & 3
- Energy Efficient LED lights
- Dimmable Ambient Lighting
- Touch Switch
- Heated Demister Pad
- IP44 Rated

Size	Plain	Matt Black	Brushed Gold
W500 x H700	UM0053 **£365**	UM0055 **£395**	UM0056 **£395**
W600 x H800	UM0054 **£395**	UM0057 **£445**	UM0058 **£445**

All Measurements in mm. All Prices include VAT

ASTRID

ASTRID Beam · Rectangle · Matt Black

ASTRID Beam · Round · Brushed Gold

ASTRID Beam

- Suitable for Bathroom Zones 2 & 3
- Matt Black or Brushed Gold metal frame
- Portrait or Landscape
- Colour temperature changing LED
- Energy Efficient LED lights
- Heated Demister Pad
- Touch Switch
- IP44 Rated

Rectangle

Size	Matt Black	Brushed Gold	
W500 x H700	UM0026	UM0043	**£395**
W600 x H800	UM0027	UM0044	**£495**

Round

Size	Matt Black	Brushed Gold	
Ø600mm	UM0024	UM0041	**£395**
Ø800mm	UM0025	UM0042	**£495**

All Measurements in mm. All Prices include VAT

ASTRID Style

ASTRID Rectangle · Brushed Gold

ASTRID Round · Matt Black

ASTRID Style

- Suitable for Bathroom Zones 2 & 3
- Decorative adjustable black strap
- Matt Black metal frame
- Colour temperature changing LED
- Energy Efficient LED lights
- Heated Demister Pad
- Touch Switch
- IP44 Rated

Ø600mm	UM0036	**£425**
Ø800mm	UM0037	**£525**

ASTRID

- Matt Black or Brushed Gold metal frame
- Suitable for use in all inside areas

Rectangle

Size	Matt Black	Brushed Gold	
W600 x H800mm	UM0031	UM0046	**£275**

Round

Size	Matt Black	Brushed Gold	
Ø600mm	UM0028	UM0045	**£195**

SANSA

SANSA

- Suitable for Bathroom Zones 2 & 3
- Energy Efficient LED lights
- Heated demister pad
- Touch Switch
- IP44 Rated

Rectangle

Size	Code	Price
W500 x H700mm	SLM5070	**£315**
W600 x H800mm	SLM6080	**£365**
W1000 x H600mm	SLM60100	**£495**
W1200 x H600mm	SLM60120	**£595**

Round

Size	Code	Price
Ø600mm	UM0014	**£350**
Ø800mm	UM0015	**£450**

Oval

Size	Code	Price
W600 x H800mm	UM0018	**£450**

SANSA Sound

- Suitable for Bathroom Zones 2 & 3
- Integrated bluetooth speakers
- USB port
- Energy Efficient LED lights
- Touch switch
- Heated demister pad
- IP44 Rated

Size	Code	Price
W600 x H800mm	UM0039	**£545**

All Measurements in mm. All Prices include VAT

SANSA Illuminated Cabinets

- Suitable for Bathroom Zones 2 & 3
- Aluminium construction
- Energy Efficient LED lights
- Heated demister pad
- Double sided mirrored doors
- 2 tempered glass adjustable shelves
- Soft-close hinges
- Touch switch
- 2 pin integrated charging socket
- 220-240V
- IP44 Rated

Single Door

	Size	Code	Price
	W500 x H700mm	UC0001	**£750**

Double Door

	Size	Code	Price
	W600 x H700mm	UC0002	**£895**

SANSA Recessed Illuminated Cabinets

- Suitable for Bathroom Zones 2 & 3
- Recessed aluminium construction
- Energy Efficient LED lights
- Heated demister pad
- Double sided mirrored doors
- 2 tempered glass adjustable shelves
- Soft-close hinges
- Touch switch
- 2 pin integrated charging socket
- 220-240V
- IP44 Rated

Single Door

	Size	Code	Price
	W500 x H700mm	UC0004	**£750**

Double Door

	Size	Code	Price
	W600 x H700mm	UC0005	**£895**

HOUSTON

- Energy Efficient LED lights
- Heated demister pad
- Touch switch
- IP44 Rated

	Size	Code	Price
	W500 x H700mm	HLM5070	**£315**
	W600 x H800mm	HLM6080	**£365**

HAMPTON Mirror Cabinets

Single Door	Size	Code	Price
40cm Mirror Cabinet	W400 x H620 x D130mm	ELTHMC40	**£150**
50cm Mirror Cabinet	W500 x H620 x D130mm	ELTHMC50	**£180**

Two Door	Size	Code	Price
60cm Mirror Cabinet	W600 x H620 x D130mm	ELTHMC60	**£220**

Three Door	Size	Code	Price
80cm Mirror Cabinet	W800 x H620 x D130mm	ELTHMC80	**£270**

STILO Mirror Cabinets

Single Door	Size	Code	Price
40cm Stainless Steel Mirror Cabinet	W400 x H600 x D120mm	SSMC4060	**£260**

Two Door	Size	Code	Price
60cm Stainless Steel Mirror Cabine	W600 x H670 x D120mm	SDMC6067	**£290**

VILLA

Round	Size	Code	Price
	Ø600mm	UM0002	**£120**
	Ø800mm	UM0003	**£165**

Rectangle	Size	Code	Price
	W500 x H700mm	UM0005	**£100**
	W1000 x H600mm	UM0006	**£155**

All Measurements in mm. All Prices include VAT

SANITARYWARE

Discover our exceptional sanitaryware collection, where form and function seamlessly intertwine to create a bathroom experience like no other. Explore our innovative toilet offering, featuring cutting-edge rimless technology that revolutionises hygiene.

With a rimless design, our toilets eliminate hidden, hard-to-reach areas where dirt and germs can accumulate, ensuring a cleaner and more hygienic bathroom experience.

Our commitment to sustainability is reflected in our low flush volumes of just 4/2.6 litres, reducing water consumption and contributing to climate control efforts. Embrace versatility with our wide range of designs and colour options, allowing you to personalise your bathroom, reflecting your unique style and personality.

Experience the perfect blend of cutting-edge features, sustainable values, and exceptional design with our extraordinary sanitaryware collection. Elevate your bathroom to new heights of style, hygiene, and eco-consciousness.

Sanitaryware Guide

Semi Pedestal Basin

Semi Pedestal Basins are wall hung basins secured to a supporting wall. They conceal pipework that returns through the wall with a semi pedestal that does not reach the floor. These basins provide your bathroom with more floor space.

Corner Basin

Corner Basins fit into a right-angled wall corner of your bathroom. They are attached to the wall and often have no pedestal. Bottle Traps can be added to house your pipework. These basins are perfect for cloakrooms or smaller bathrooms.

Full Pedestal Basin

Full Pedestal Basins are attached to your wall. Equipped with a floor mounted pedestal, these basins provide a shroud to conceal your pipework and easily harmonise with the rest of your space.

Undermounted Basin

An undermounted basins sits under your surrounding countertop, which is a popular solution for a custom-built vanity application. This style of basin is easy to clean and creates a beautiful aesthetic.

Countertop Basin

Countertop Basins positioned on top of a countertop unit or shelf are best paired with a tall basin tap, or wall mounted tap. The SONAS range of countertop basins are available in a variety of colours, shapes and sizes.

Close Coupled – Open Back

A Closed Coupled Open Back style WC has the pan and cistern closely coupled together with the necessary clearance space for your waste pipe. This provides more flexibility for your pipework and can be easily accommodated within most bathrooms.

Close Coupled – Fully Shrouded

A Closed Coupled Fully Shrouded toilet has the pan and cistern closely coupled together. In this design, the pan is seen to meet with your wall. This allows you to conceal your bathroom pipework.

Back To Wall

Back To Wall toilets are a great space saving technique. The main difference between this style and the Closed Coupled toilet is that the cistern is concealed behind your bathroom wall, or placed in a furniture WC unit.

Wall Hung

Wall hung toilets are installed by mounting them on the wall, resulting in a more spacious bathroom layout. To install them, a sturdy fast fix frame is placed behind the wall, which can support up to 400kg of weight. The flushing mechanisms of these toilets can be conveniently accessed through a push plate.

Sanitaryware Features Guide

SHORT PROJECTION
These WCs are the perfect solution if you are short on space. They are standard toilets, but extend less. The SONAS range of Short Projection WCs allow you to maximise your space without compromising on quality and functionality.

COMFORT HEIGHT
The SONAS Comfort Height WC collection stands a little taller than regular height toilets. The additional elevation makes accessing the pan easier, and more comfortable to use.

RIMLESS
Instead of water flowing into the bowl around the rim, a direct flush technique shoots water around the edge of a smooth pan. The absence of a rim means significantly easier cleaning, enhanced hygiene, and improved flushing performance.

QUICK RELEASE
Designed for easy and efficient cleaning and maintenance, quick release seats feature a mechanism that allows for swift removal and reattachment without the need for tools. By pressing the button located on the hinges of the seat, it can be effortlessly taken off the toilet for thorough cleaning, reaching areas that are usually challenging to access.

SOFT CLOSE
Soft close toilet seats feature a mechanism that enables them to close gradually and quietly, eliminating the common issue of seats slamming shut. These seats offer a noise-free and controlled descent, enhancing overall bathroom comfort.

ECO FLUSH
An innovative flushing system, with adjustable flush volumes between 2.6 up to 4.5ltrs. These toilets are sustainably conscious by reducing water consumption and having a positive impact on the environment.

AVANTI

Designed to be interchangeable and work across multiple ranges, AVANTI coloured thin-edge ceramic basin is more than just a practical vessel for everyday use. Available in eight colours, AVANTI's soft curves and classy style are the defining characteristics of this collection.

Crafted from the highest quality material, this elegant countertop basin is built to last. AVANTI evokes a feeling of refinement and is really for anyone looking for something extra special to complement their bathroom.

Basin Options

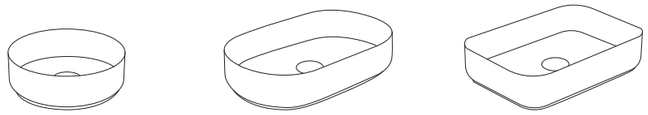

Round | Oval | Rectangle

WC Options

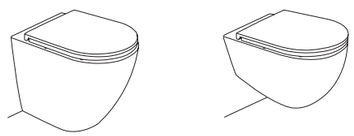

Back To Wall

Wall Hung

Colour Options

Ceramic White | Satin White | Ivory

Forest Green | Parisian Blue | Ground Mocha

Charcoal Grey | Carbon Black

AVANTI · Round Basin · Wall Hung WC · Forest Green

AVANTI · Back To Wall WC · Oval Basin · Satin White

AVANTI · Oval Basin · Ivory

AVANTI · Round Basin · Carbon Black

AVANTI · Oval Basin · Satin White

AVANTI · Rectangle Basin · Ivory

AVANTI Countertop Basins

Round

Ø360 x H120mm

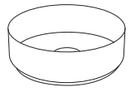

Ceramic White	ARVBCW	**£250**	Parisian Blue	ARVBPB	**£360**
Satin White	ARVBSW	**£360**	Ground Mocha	ARVBGM	**£360**
Ivory	ARVBIV	**£360**	Charcoal Grey	ARVBCG	**£360**
Forest Green	ARVBFG	**£360**	Carbon Black	ARVBCB	**£360**

Oval

W550 x H120 x D360mm

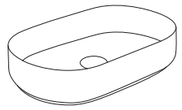

Ceramic White	AOVBCW	**£340**	Parisian Blue	AOVBPB	**£445**
Satin White	AOVBSW	**£445**	Ground Mocha	AOVBGM	**£445**
Ivory	AOVBIV	**£445**	Charcoal Grey	AOVBCG	**£445**
Forest Green	AOVBFG	**£445**	Carbon Black	AOVBCB	**£445**

Rectangle

W500 x H120 x D360mm

Ceramic White	ASVBCW	**£305**	Parisian Blue	ASVBPB	**£415**
Satin White	ASVBSW	**£415**	Ground Mocha	ASVBGM	**£415**
Ivory	ASVBIV	**£415**	Charcoal Grey	ASVBCG	**£415**
Forest Green	ASVBFG	**£415**	Carbon Black	ASVBCB	**£415**

AVANTI WCs

With Soft close seat & cover

Back To Wall

W365 x H400 x D520mm

Ceramic White	ABTWWCCW	**£395**	Parisian Blue	ABTWWCPB	**£555**
Satin White	ABTWWCSW	**£555**	Ground Mocha	ABTWWCGM	**£555**
Ivory	ABTWWCIV	**£555**	Charcoal Grey	ABTWWCCG	**£555**
Forest Green	ABTWWCFG	**£555**	Carbon Black	ABTWWCCB	**£555**

Wall Hung

W365 x H400 x D530mm

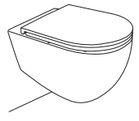

Ceramic White	AWHWCCW	**£395**	Parisian Blue	AWHWCPB	**£555**
Satin White	AWHWCSW	**£555**	Ground Mocha	AWHWCGM	**£555**
Ivory	AWHWCIV	**£555**	Charcoal Grey	AWHWCCG	**£555**
Forest Green	AWHWCFG	**£555**	Carbon Black	AWHWCCB	**£555**

Concealed Cistern
for Back To Wall WCs

Fastfix Frame
for Wall Hung WCs

See Page 171

All Measurements in mm. All Prices include VAT

Taps Not Included See Pages page 172 - 204

BASE

BASE · Open Back Close Coupled WC

BASE Rimless WCs

Unified Water Label 3 l/min · eco FLUSH · SOFT CLOSE · QUICK RELEASE · RIMLESS

Open Back Close Coupled WC

WC, cistern & fittings,
4.5/3L push button
Soft close quick release seat
W373 x H825 x D662mm

USW0486 **£425**

Comfort Height Open Back Close Coupled WC

WC, cistern & fittings,
4.5/3L push button
Soft close quick release seat
W373 x **H869** x D651mm

USW0487 **£455**

Fully Shrouded Close Coupled WC

WC, cistern & fittings,
4.5/3L push button
Soft close quick release seat
W373 x H834 x D650mm

USW0488 **£445**

Comfort Height Fully Shrouded Close Coupled WC

WC, cistern & fittings,
4.5/3L push button
Soft close quick release seat
W373 x **H862** x D649mm

USW0489 **£475**

Back To Wall WC

Soft close quick release seat
W360 x H410 x D520mm

USW0490 **£315**

Comfort Height Back To Wall WC

Soft close quick release seat
W365 x **H445** x D515mm

USW0491 **£350**

Flush Button Upgrades **£25**

Matt White	USW0377
Matt Black	USW0318
Brushed Gold	USW0319
Brushed Nickel	USW0378

Concealed Cistern
for Back To Wall WCs

See Page 171

See Page **148 - 151**
For Matching Basins

All Measurements in mm. All Prices include VAT

VIA

VIA · Open Back WC · Delta D Shape Seat

VIA · Fully Shrouded WC · Sequence Seat

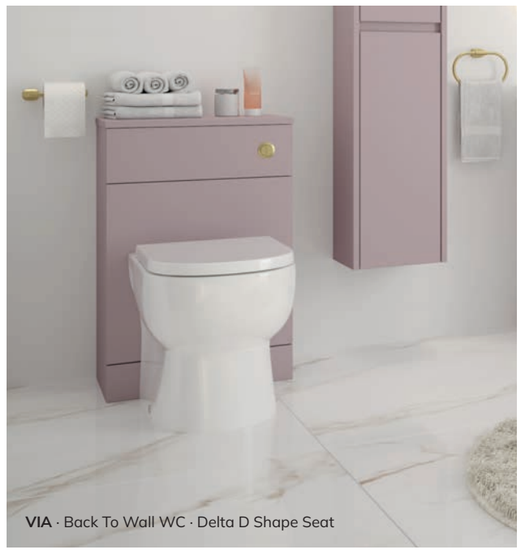

VIA · Back To Wall WC · Delta D Shape Seat

VIA · Wall Hung WC · Sequence Seat

VIA Rimless WCs

Unified Water Label 3 l/min · eco FLUSH · RIMLESS

3
Seat Options

SOFT CLOSE · QUICK RELEASE

DELTA - D Shape

SEQUENCE - Slim

SEQUENCE

Open Back Close Coupled WC

WC, cistern & fittings
4/2.6L push button
Soft close quick release seat
W395 x H800 x D620mm
£445

With Delta - D Shape Seat	USW0335
With Sequence - Slim Seat	USW0419
With Sequence Seat	USW0420

Fully Shrouded Close Coupled WC

WC, cistern & fittings
4/2.6L push button
Soft close quick release seat
W395 x H800 x D625mm
£465

With Delta - D Shape Seat	USW0336
With Sequence - Slim Seat	USW0421
With Sequence Seat	USW0422

Comfort Height Open Back Close Coupled WC

NEW

WC, cistern & fittings
4/2.6L push button
Soft close quick release seat
W395 x **H850** x D620mm
£475

With Delta - D Shape Seat	USW0409
With Sequence - Slim Seat	USW0493
With Sequence Seat	USW0494

Comfort Height Fully Shrouded Close Coupled WC

WC, cistern & fittings
4/2.6L push button
Soft close quick release seat
W395 x **H850** x D625mm
£495

With Delta - D Shape Seat	USW0337
With Sequence - Slim Seat	USW0423
With Sequence Seat	USW0424

Wall Hung WC

Soft close quick release seat
W363 x H310 x D495mm
£350

With Delta - D Shape Seat	USW0338
With Sequence - Slim Seat	USW0425
With Sequence Seat	USW0426

Back To Wall WC

Soft close quick release seat
W363 x H403 x D520mm
£350

With Delta - D Shape Seat	USW0339
With Sequence - Slim Seat	USW0427
With Sequence Seat	USW0428

Comfort Height Back To Wall WC

NEW

Soft close quick release seat
W363 x **H450** x D520mm
£390

With Delta - D Shape Seat	USW0410
With Sequence - Slim Seat	USW0495
With Sequence Seat	USW0496

Fastfix Frame
for Wall Hung WCs

Concealed Cistern
for Back To Wall WCs

See Page 171

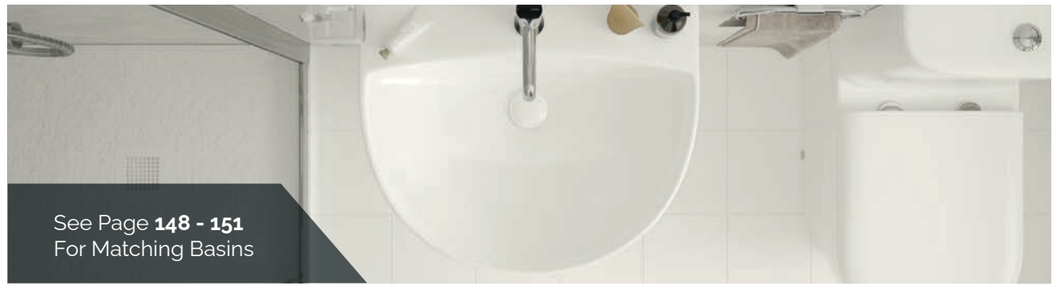

See Page **148 - 151**
For Matching Basins

PEÑA

PEÑA · Fully Shrouded WC · Sequence Seat

PEÑA · Open Back WC · Sequence Seat

PEÑA Rimless WCs

Unified Water Label 3 l/min

3
Seat Options

SOFT CLOSE QUICK RELEASE

DELTA - D Shape

SEQUENCE - Slim

SEQUENCE

Open Back Close Coupled WC

WC, cistern & fittings
4/2.6L push button
Soft close quick release seat
W395 x H800 x D655mm
£445

With Delta - D Shape Seat	USW0332
With Sequence - Slim Seat	USW0429
With Sequence Seat	USW0430

Fully Shrouded Close Coupled WC

WC cistern & fittings
4/2.6L push button
Soft close quick release seat
W395 x H800 x D655mm
£465

With Delta - D Shape Seat	USW0334
With Sequence - Slim Seat	USW0431
With Sequence Seat	USW0432

Comfort Height Open Back Close Coupled WC

NEW

WC cistern & fittings
4/2.6L push button
Soft close quick release seat
W395 x **H850** x D655mm
£475

With Delta - D Shape Seat	USW0405
With Sequence - Slim Seat	USW0497
With Sequence Seat	USW0498

Comfort Height Fully Shrouded Close Coupled WC

WC cistern & fittings
4/2.6L push button
Soft close quick release seat
W395 x **H850** x D655mm
£495

With Delta - D Shape Seat	USW0333
With Sequence - Slim Seat	USW0513
With Sequence Seat	USW0433

All Measurements in mm. All Prices include VAT

Wall Hung WC

NEW

Soft close quick release seat
W365 x H310 x D495mm
£350

With Delta - D Shape Seat	USW0408
With Sequence - Slim Seat	USW0503
With Sequence Seat	USW0504

Back To Wall WC

NEW

Soft close quick release seat
W365 x H400 x D500mm
£350

With Delta - D Shape Seat	USW0406
With Sequence - Slim Seat	USW0499
With Sequence Seat	USW0500

Comfort Height Back To Wall WC

NEW

Soft close quick release seat
W365 x **H450** x D500mm
£390

With Delta - D Shape Seat	USW0407
With Sequence - Slim Seat	USW0501
With Sequence Seat	USW0502

Fastfix Frame
for Wall Hung WCs

Concealed Cistern
for Back To Wall WCs

See Page 171

See Page **148 - 151**
For Matching Basins

SOPHIA

SOPHIA · Fully Shrouded WC · Gamma - D Shape Seat

SOPHIA · Fully Shrouded WC · Gamma - Slim Seat

SOPHIA Rimless WCs

Unified Water Label 3 l/min · eco FLUSH · RIMLESS

2
Seat Options

SOFT CLOSE · QUICK RELEASE

GAMMA - D Shape

GAMMA - Slim

Fully Shrouded Close Coupled WC

WC, cistern & fittings
4.5/3L push button
Soft close quick release seat
W350 x H830 x D610
£515

With Gamma - D Shape Seat	SOPFS01
With Gamma - Slim Seat	SOPFS02

Comfort Height Fully Shrouded Close Coupled WC

WC, cistern & fittings
4.5/3L push button
Soft close quick release seat
W350 x **H885** x D635mm
£575

With Gamma - D Shape Seat	SOPCHFS01
With Gamma - Slim Seat	SOPCHFS03

Flush Button Upgrades	**£25**
Matt White	USW0377
Matt Black	USW0318
Brushed Gold	USW0319
Brushed Nickel	USW0378

All Measurements in mm. All Prices include VAT

INSPIRE

INSPIRE · Fully Shrouded WC · Sequence Seat

INSPIRE · Back To Wall WC · Sequence Seat

INSPIRE Rimless WCs

Unified Water Label 3 l/min · eco FLUSH · RIMLESS

3
Seat Options

SOFT CLOSE · QUICK RELEASE

DELTA - D Shape

DELTA - Slim

SEQUENCE

Fully Shrouded Close Coupled WC

WC, cistern & fittings
4.5/3L push button
Soft close quick release seat
W380 x H835 x D615mm
£515

With Delta - D Shape Seat	INSFS06
With Delta - Slim Seat	INSFS02S
With Sequence Seat	USW0434

Back To Wall WC

Soft close quick release seat
W365 x H405 x D565mm
£415

With Delta - D Shape Seat	INSBTW06
With Delta - Slim Seat	INSBTW01S
With Sequence Seat	USW0435

Concealed Cistern
for Back To Wall WCs

See Page 171

Flush Button Upgrades	£25
Matt White	USW0377
Matt Black	USW0318
Brushed Gold	USW0319
Brushed Nickel	USW0378

See Page **148 - 151**
For Matching Basins

All Measurements in mm. All Prices include VAT

REFLECTIONS

REFLECTIONS · Fully Shrouded WC · Sequence Seat

REFLECTIONS · Wall Hung WC · Delta Slim Seat

REFLECTIONS · Back To Wall WC · Delta Slim Seat

REFLECTIONS Rimless WCs

Unified Water Label 3 l/min · eco FLUSH · RIMLESS

3
Seat Options

SOFT CLOSE · QUICK RELEASE

DELTA - D Shape

DELTA - Slim

SEQUENCE

Fully Shrouded Close Coupled WC

WC, cistern & fittings
4.5/3L push button
Soft close, quick release seat
W378 x H835 x D625mm
£515

With Delta - D Shape Seat	REFFS06
With Delta - Slim Seat	REFF02S
With Sequence Seat	USW0436

Wall Hung WC

Soft close quick release seat
W365 x H345 x D532mm
£415

With Delta - D Shape Seat	REFWH06
With Delta - Slim Seat	REFWH01S
With Sequence Seat	USW0437

Back To Wall WC

Soft close quick release seat
W363 x H410 x D560mm
£415

With Delta - D Shape Seat	REFBTW06
With Delta - Slim Seat	REFBTW01S
With Sequence Seat	USW0438

Fastfix Frame
for Wall Hung WCs

Concealed Cistern
for Back To Wall WCs

See Page 171

Flush Button Upgrades	**£25**
Matt White	USW0377
Matt Black	USW0318
Brushed Gold	USW0319
Brushed Nickel	USW0378

See Page **148 - 151**
For Matching Basins

All Measurements in mm. All Prices include VAT

HORIZON

Round & Square Washbasins

HORIZON · 500 Round Basin with Full Pedestal

HORIZON · 450 Round Basin with Semi Pedestal

HORIZON · 550 Square Basin with Full Pedestal

HORIZON · 500 Square Basin with Minimalist Bottle Trap

All Measurements in mm. All Prices include VAT

Taps Not Included See Pages page 172 - 204

HORIZON — Round Basins

550 Round Basin — W550 x D460mm

With Full Pedestal	USW0322	**£245**
With Semi Pedestal	USW0328	**£245**

With Minimalist Bottle Trap	**£225**
Chrome	USW0345
Matt Black	USW0453
Brushed Gold	USW0454
Brushed Nickel	USW0455

500 Round Basin — W500 x D400mm

With Full Pedestal	USW0321	**£225**
With Semi Pedestal	USW0327	**£225**

With Minimalist Bottle Trap	**£200**
Chrome	USW0344
Matt Black	USW0456
Brushed Gold	USW0457
Brushed Nickel	USW0458

450 Round Basin — W450 x D365mm

With Full Pedestal	USW0320	**£200**
With Semi Pedestal	USW0326	**£200**

With Minimalist Bottle Trap	**£175**
Chrome	USW0343
Matt Black	USW0459
Brushed Gold	USW0460
Brushed Nickel	USW0461

All Measurements in mm. All Prices include VAT

HORIZON — Square Basins

550 Square Basin — W550 x D460mm

With Full Pedestal	USW0325	**£245**
With Semi Pedestal	USW0331	**£245**

With Minimalist Bottle Trap	**£225**
Chrome	USW0342
Matt Black	USW0462
Brushed Gold	USW0463
Brushed Nickel	USW0464

500 Square Basin — W500 x D400mm

With Full Pedestal	USW0324	**£225**
With Semi Pedestal	USW0330	**£225**

With Minimalist Bottle Trap	**£200**
Chrome	USW0341
Matt Black	USW0465
Brushed Gold	USW0466
Brushed Nickel	USW0467

450 Square Basin — W450 x D380mm

With Full Pedestal	USW0323	**£200**
With Semi Pedestal	USW0329	**£200**

With Minimalist Bottle Trap	**£175**
Chrome	USW0340
Matt Black	USW0468
Brushed Gold	USW0469
Brushed Nickel	USW0470

520 Semi Recessed Basin — W520 x D420mm

USW0512	**£195**

Taps Not Included See Pages page 172 - 204

sonasbathrooms.com

SCALA

SCALA · Open Back WC · Delta Slim Seat · 450 Basin with Full Pedestal

SCALA · 520 Basin with Full Pedestal

SCALA · Back To Wall Bidet · Fully Shrouded WC · Delta D Shape Seat

SCALA Washbasins

520 Basin with Full Pedestal

1 Tap Hole
W520 x H820 x D430mm

SCBFP52 **£200**

450 Basin with Full Pedestal

1 Tap Hole
W450 x H820 x D370mm

SCBFP45 **£200**

520 Semi Recessed Basin

1 Tap Hole
W520 x D430mm

USW0048 **£205**

450 Basin

1 Tap Hole
W450 x D370mm

USW0045 **£108**

Bottle trap Not Included

All Measurements in mm. All Prices include VAT

Taps Not Included See Pages page 172 - 204

SCALA Rimless WCs

3
Seat Options

DELTA - D Shape

DELTA - Slim

SEQUENCE

Fully Shrouded Close Coupled WC

WC, cistern & fittings 6/4L push button
Soft close quick release seat
W370 x H790 x D600mm
£515

With Delta - D Shape Seat	SCFSWC01
With Delta - Slim Seat	SCFSWC02
With Sequence Seat	USW0439

Comfort Height Fully Shrouded Close Coupled WC

WC, cistern & fittings 6/4L push button
Soft close quick release seat
W370 x **H850** x D665mm
£675

With Delta - D Shape Seat	SCFSWC03
With Delta - Slim Seat	SCFSWC04
With Sequence Seat	USW0440

Open Back Close Coupled WC

WC, cistern & fittings 6/4L push button
Soft close quick release seat
W370 x H790 x D600mm
£515

With Delta - D Shape Seat	SCOBWC01
With Delta - Slim Seat	SCOBWC02
With Sequence Seat	USW0441

Comfort Height Open Back Close Coupled WC

WC, cistern & fittings 6/4L push button
Soft close quick release seat
W370 x **H850** x D665mm
£675

With Delta - D Shape Seat	SCOBWC03
With Delta - Slim Seat	SCOBWC04
With Sequence Seat	USW0442

All Measurements in mm. All Prices include VAT

SCALA Rimless WCs

Wall Hung WC

Soft close quick release seat
W360 x H320 x D520mm
£435

With Delta - D Shape Seat	SCWHWC01
With Delta - Slim Seat	SCWHWC02
With Sequence Seat	USW0443

Back To Wall WC

Soft close quick release seat
W360 x H400 x D550mm
£410

With Delta - D Shape Seat	SCBTWWC01
With Delta - Slim Seat	SCBTWWC02
With Sequence Seat	USW0444

Comfort Height Back To Wall WC

Soft close quick release seat
W360 x **H425** X D550mm
£480

With Delta - D Shape Seat	SC425BTWWC01
With Delta - Slim Seat	SC425BTWWC02
With Sequence Seat	USW0445

Fastfix Frame
for Wall Hung WCs

Concealed Cistern
for Back To Wall WCs

See Page
171

Back To Wall Bidet

W360 x H400 x D550mm

USW0049 **£330**

SIGMA

SIGMA · Open Back WC · Delta D Shape Seat

SIGMA · Fully Shrouded WC · Delta Slim Seat

SIGMA · Wall Hung WC · Delta Slim Seat

SIGMA - 550 Basin with Semi Pedestal

SIGMA Washbasins

550 Basin with Full Pedestal

1 Tap Hole
W550 x D450mm

SIGBFP55 **£245**

550 Basin with Semi Pedestal

1 Tap Hole
W550 x D450mm

SIGBSP55 **£290**

450 Basin with Full Pedestal

1 Tap Hole
W450 x D370mm

SIGBFP45 **£215**

520 Semi Recessed Basin

1 Tap Hole
W520 x D425mm

USW0073 **£290**

All Measurements in mm. All Prices include VAT

SIGMA WCs

3
Seat Options

DELTA - D Shape

DELTA - Slim

SEQUENCE

Fully Shrouded Close Coupled WC

WC, cistern & fittings, 6/4L push button
Soft close quick release seat
W373 x H830 x D625
£415

With Delta - D Shape Seat	SIGFSWC01
With Delta - Slim Seat	SIGFSWC02
With Sequence Seat	USW0446

Open Back Close Coupled WC

WC, cistern & fittings, 6/4L push button
Soft close quick release seat
W373 x H830 x D625
£415

With Delta - D Shape Seat	SIGOBWC01
With Delta - Slim Seat	SIGOBWC02
With Sequence Seat	USW0447

Wall Hung Rimless WC

Soft close quick release seat
W360 x H430 x D550mm
£390

With Delta - D Shape Seat	SIGWHWC01
With Delta - Slim Seat	SIGWHWC02
With Sequence Seat	USW0448

Back To Wall WC

Soft close quick release seat
W360 x H425 x D550mm
£355

With Delta - D Shape Seat	SIGBTWWC01
With Delta - Slim Seat	SIGBTWWC02
With Sequence Seat	USW0449

Fastfix Frame
for Wall Hung WCs

Concealed Cistern
for Back To Wall WCs

See Page 171

RUBIX

RUBIX · Wall Hung WC · Gamma Slim Seat · 400 Basin

RUBIX Washbasins

520 Basin with Full Pedestal

1 Tap Hole
W520 x D425mm

RBXBFP52 **£210**

520 Basin with Semi Pedestal

1 Tap Hole
W520 x D425mm

RBXBSP52 **£210**

400 Basin

1 Tap Hole
W400 x D365mm

USW0057 **£140**

520 Semi Recessed Basin

1 Tap Hole
W520 x D425mm

USW0080 **£225**

All Measurements in mm. All Prices include VAT

RUBIX · Open Back WC · Gamma D Shape Seat · 520 Basin with Full Pedestal

Rubix WCs

2
Seat Options

GAMMA - D Shape

GAMMA - Slim

Open Back Close Coupled WC

WC, cistern & fittings, 6/4L push button.
Soft close quick release seat
W365 x H780 x D600mm
£390

With Gamma - D Shape Seat	RBXCCWC01
With Gamma - Slim Seat	RBXCCWC02

Wall Hung WC

Soft close quick release seat
W350 x H430x D520mm
£390

With Gamma - D Shape Seat	RBXWHWC01
With Gamma - Slim Seat	RBXWHWC02

Back To Wall WC

Soft close quick release seat
W350 x H400 x D500mm
£360

With Gamma - D Shape Seat	RBXBTWWC01
With Gamma - Slim Seat	RBXBTWWC02

Fastfix Frame
for Wall Hung WCs

Concealed Cistern
for Back To Wall WCs

See Page 171

Taps Not Included See Pages page 172 - 204

CHLOE

CHLOE · Back To Wall WC

CHLOE · Fully Shrouded WC

CHLOE · Open Back Close Coupled WC

All Measurements in mm. All Prices include VAT

CHLOE WCs

Open Back Close Coupled WC

WC, cistern & fittings
6/4L push button

Soft close quick release seat
W380 x H780 x D650mm

CHLCC01 **£320**

Fully Shrouded Close Coupled WC

WC, cistern & fittings
6/4L push button

Soft close quick release seat
W380 x H780 x D650mm

CHLFS01 **£360**

Back To Wall WC

Soft close quick release seat
W365 x H400 x D550mm

CHLBTW01 **£245**

Concealed Cistern
for Back To Wall WCs

See Page
171

See Page **148 - 151**
For Matching Basins

Taps Not Included See Pages page 172 - 204

STRATA

STRATA · 485 Basin with Full Pedestal · Close Coupled WC

STRATA · Back To Wall WC

STRATA · 450 Basin with Semi Pedestal

STRATA Washbasins

Round Fronted Basin	**£105**
W450 x D330mm	
1 Tap Hole	PB021
2 Tap Hole	PB020

Semi-Recessed Basin	**£140**
W550 x D485mm	
1 Tap Hole	USW0356
2 Tap Hole	USW0357

Vanity Basin	**£105**
W530 x D400mm	
1 Tap Hole	USW0354
2 Tap Hole	USW0353

Corner Basin	**£85**
W397 xW397 x D417mm	
1 Tap Hole	USW0355

Square Undercounter Basin	**£140**
W460 x D330mm	
No Tap Hole	USW0077

Oval Undercounter Basin	**£140**
W560 x D420mm	
No Tap Hole	USW0076

Basin with Semi Pedestal
£115

		1 Tap Hole	**2 Tap Hole**
450 Basin	W450 x D380mm	*PB006S*	PB007S
500 Basin	W500 x D410mm	PB004S	PB005S
550 Basin	W550 x D460mm	PB011S	PB012S

Basin with Full Pedestal
£105

		1 Tap Hole	**2 Tap Hole**
450 Basin	W450 x D380mm	*PB006P*	PB007P
500 Basin	W500 x D410mm	PB004P	PB005P
550 Basin	W550 x D460mm	PB011P	PB012P

STRATA WCs

Low Level WC
WC, cistern & fitting
W520 x H895 x D710mm

	Bottom Supply	**Side Supply**	
Standard seat	STLLLC	USW0450	**£240**
Soft close seat	STWLLS	USW0451	**£280**

Close Coupled WC
WC, cistern & fittings
6/4L push button
W430 x H780 x D680mm

Standard seat	STWCC	**£225**
Soft close seat	STWCS	**£265**

Wall Hung WC

Standard seat	STWHC	**£195**
Soft close seat	STWHS	**£240**

Back To Wall WC

Standard seat	STBTWC	**£195**
Soft close seat	STBTWS	**£240**

All Measurements in mm. All Prices include VAT

Taps Not Included See Pages page 172 - 204

WESTBURY

WESTBURY · 610 Basin with Full Pedestal

WESTBURY · 550 Basin and Chrome Washstand

WESTBURY · High Level WC · Oak MDF Soft Close Seat

WESTBURY · Close Coupled WC · Oak MDF Soft Close Seat

All Measurements in mm. All Prices include VAT

WESTBURY

610 Basin with Full Pedestal	**£310**
W610 x D505mm	
1 Tap Hole	WST611
2 Tap Hole	WST612

550 Basin with Full Pedestal	**£299**
W550 x D480mm	
1 Tap Hole	WST551
2 Tap Hole	WST552

500 Basin with Full Pedestal	**£295**
W500 x D310mm	
2 Tap Hole Only	WST502

610 Basin with Chrome Washstand	**£620**
W610 x D505mm	
1 Tap Hole	WST611CPS
2 Tap Hole	WST612CPS

550 Basin with Chrome Washstand	**£599**
W550 x D480mm	
1 Tap Hole	WST551CPS
2 Tap Hole	WST552CPS

500 Basin with Chrome Washstand	**£570**
W500 x D310mm	
2 Tap Hole Only	WST502CPS

550 Semi Recessed Basin	**£205**
W550 x D440mm	
1 Tap Hole Only	WES016

Close Coupled WC	**£535**
Includes: wc, cistern, fittings & ceramic lever	
W485 x H780 x D725	
White MDF soft close seat	WSTCCWH
Oak MDF soft close seat	WSTCCAK

Low Level WC	**£765**
Includes: wc, cistern, fittings chrome flush pipe kit, ceramic lever	
W493 x H1205 x D745mm	
White MDF soft close seat	WSTLLWH
Oak MDF soft close seat	WSTLLAK

Back to Wall WC	**£365**
W385 x H410 x D520mm	
See Page 171 for Concealed Cistern for Back To Wall WCs	
White MDF soft close seat	WSTBTWWH
Oak MDF soft close seat	WSTBTWAK

High Level WC	**£935**
Includes: wc, ornate brackets, cistern, fittings, chrome flush pipe kit, and ceramic lever on chain	
W493 x H2455-2495 x D655mm	
White MDF soft close seat	WSTHLWH
Oak MDF soft close seat	WSTHLAK

Taps Not Included See Pages page 172 - 204

CAMBRIDGE

CAMBRIDGE WCs

Lever WC
WC, lever cistern
W505 x H860 x D725mm

Soft close, quick release seat & cover	CAM9000	**£365**
Standard seat & cover	CAM9111	**£335**

CAMBRIDGE Washbasins

500 Basin
W500 x D380mm

1 Tap Hole	CAM9008	**£120**
2 Tap Hole	CAM9009	**£120**

See Page 205 for bottle trap options

500 Basin with Full Pedestal
W500 x D380mm

1 Tap Hole	CAM0211	**£185**
2 Tap Hole	CAM0205	**£185**

600 Basin with Full Pedestal
W600 x D495mm

1 Tap Hole	CAM0311	**£245**
2 Tap Hole	CAM0305	**£245**

All Measurements in mm. All Prices include VAT

Taps Not Included See Pages page 172 - 204

Toilet Seats

BERMUDA

General purpose thermoplastic seat & cover

HARBERWH **£35**

CORSICA

Lighter weight general purpose thermoplastic seat and cover, nylon two-position hinge fixings

HARCORWH **£50**

APOLLO

Soft close quick release seat & cover

SU007 **£60**

COSTA

Medium weight general purpose thermoplastic seat and cover, stainless steel two-position fastfix hinge

HARCOSWH **£80**

SEQUENCE

Soft close quick release seat & cover

TS0001 **£85**

SEQUENCE Slim

Soft close quick release seat & cover

TS0006 **£95**

DELTA D Shaped

Soft close quick release seat & cover

SU004 **£80**

DELTA Slim

Soft close quick release seat & cover

SU023 **£95**

GAMMA D Shaped

Soft close quick release seat & cover

TS0002 **£85**

GAMMA Slim

Soft close quick release seat & cover

TS0003 **£85**

Concealed Cisterns & Frames

Concealed Cistern for Back To Wall WCs

Includes pan connectors with front access, dual flush cistern and rectangular or circular flush plate [excluding wc pan]

W420 x H420 x D155 - 185mm

With Rectangular Flush Plate		
Chrome	USW0147	**£355**
White	USW0148	**£355**
Black	USW0149	**£355**
With Circular Flush Plate		
Chrome	USW0150	**£355**
White	USW0151	**£355**
Black	USW0152	**£355**
Brushed Gold	USW0510	**£565**
Brushed Nickel	USW0511	**£565**

FASTFIX Frames for Wall Hung WCs

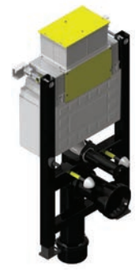

Includes pan connectors with top and front access, dual flush compact cistern and rectangular or circular flush plate [excluding wc pan]

W420 x H780-980 x D155-185mm

With Rectangular Flush Plate		
Chrome	TO64113P43	**£500**
White	TO64113P44	**£500**
Black	TO4113P45	**£500**
With Circular Flush Plate		
Chrome	TO64113P47	**£500**
White	TO64113P48	**£500**
Black	TO64113P49	**£500**
Brushed Gold	USW0506	**£695**
Brushed Nickel	USW0507	**£695**

Includes pan connectors with front access, dual flush cistern and rectangular or circular flush plate [excluding wc pan]

W350 x H1100-1300 x D135-180mm

With Rectangular Flush Plate		
Chrome	TO74113P43	**£420**
White	TO74113P44	**£420**
Black	TO74113P45	**£420**
With Circular Flush Plate		
Chrome	TO74113P47	**£420**
White	TO74113P48	**£420**
Black	TO74113P49	**£420**
Brushed Gold	USW0508	**£695**
Brushed Nickel	USW0509	**£695**

FLUSH PLATE OPTIONS

Rectangular Flush Plates

Chrome

White

Black

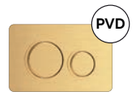

NEW
Brushed Gold

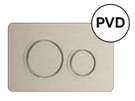

NEW
Brushed Nickel

Circular Flush Plates

Chrome

White

Black

TAPS

Discover the perfect balance of style and sustainability with the SONAS Tap Collection. Elevate your bathroom design with our exquisite range of bathroom taps, blending contemporary and traditional designs to suit any aesthetic preference. Crafted with utmost care, our taps boast exceptional durability and unrivalled quality, ensuring long-lasting performance. Experience the freedom of choice with our diverse selection of finishes, including chrome, matt black, brushed gold, and nickel. Add a touch of personalisation to your space and create a truly unique bathroom oasis.

We are committed to sustainability, and our collections are design with the environment in mind. With features such as cold start technology and low flow aerators, water conservation is at the forefront, allowing you to reduce your water consumption without compromising on performance or comfort. Our bathroom tap collection offers a seamless combination of style, durability, and sustainable value. Enhance your bathroom experience with taps that make a statement and contribute to a greener future.
Choose quality. Choose style.
Choose sustainability.

Tap Guide

FINISHES

Chrome

Matt Black

Brushed Gold

Brushed Nickel

Available in selected ranges

BASIN

Basin Mixer

The basin mixer cleverly combines hot and cold water into an individual stream. This design ensures easy control of both your temperature and your flow using only a single lever.

Basin Taps

Mounted onto the basin and sold as a pair, basin taps have separate taps for your hot and cold water. Basin taps are available in both traditional and modern styles.

Cloakroom

The cloakroom is a more compact version of the basin mixer. These taps can be paired with our stunning range of cloakroom vanity units and are perfect for smaller spaces.

Freestanding

A stylish, elegant and contemporary tap choice for countertop basins without a tap hole. Freestanding taps are available in rounded or angular styles and come in chrome, matt black, brushed gold and brushed Nickel finishes.

Wall Mounted

Wall mounted taps add a touch of luxury to your bathroom. Fixed to your bathroom wall, these taps offer a seamless finish, and can be used as an alternative to a freestanding mixer where a countertop basin is used.

Standard & cloakroom basin mixers include a click clack colour coordinated basin waste. Before purchasing taps and showers always ensure your site conditions meet the minimum operating pressure requirements. Please consult your plumber.

BATH

Deck Mounted

Deck mounted onto your bath, these taps are attached through drilled holes. A diverter allows you to switch between the bath filler or handset outlet. The inclusion of an extendable handheld shower head offers a full bathing or showering experience.

4 Hole

Deck mounted on to the bath with separate hot & cold controls with a diverter to switch to a convenient pull-out shower handset. 4 hole mixers requires an additional bath filling device such as a wall spout or overflow filler.

Thermostatic

Available in deck or wall-mounted options. Thermostatic bath mixers work on a pre-set temperature and can react to a sudden change in temperature, thereby avoiding scalding or cold shock.

Floorstanding

Ideal for freestanding baths, these taps allow flexibility when choosing your bath position. Available in a range of stunning finishes and styles from contemporary to traditional. These taps are a first fix consideration. Please consult with your bathroom installer.

FILLERS

Deck Mounted

Mounted on the bath through drilled holes, the single outlet mixes hot & cold water to achieve your desired temperature.
Deck mounted bath fillers are available in a range of stunning finishes and styles from contemporary to traditional.

Spout

Designed for baths without pre-drilled tap holes or for freestanding baths, spout taps are ideal for creating a neat and clutter-free solution when positioned against a wall. Spout bath fillers are available in a choice of projections and finishes.

Overflow

Overflow bath fillers allows you to fill your bath from a device mounted at the overflow. Overflow bath fillers can be used as an intelligent space-saving solution.

Wall Mounted

These are a contemporary alternative to a conventional bath filler. Adding wall mounted fillers can effect a sleek and streamlined look and feel to your bathroom.

All measurements are in mm. All prices include VAT. Standard & cloakroom basin mixers include a click clack colour coordinated basin waste. Before purchasing taps and showers always ensure your site conditions meet the minimum operating pressure requirements. Please consult your plumber.

ALITA

Chrome · Matt Black · Brushed Gold · Brushed Nickel

PVD COATED · 15 YEAR WARRANTY

ALITA · Knurled · Basin Mixer · Chrome

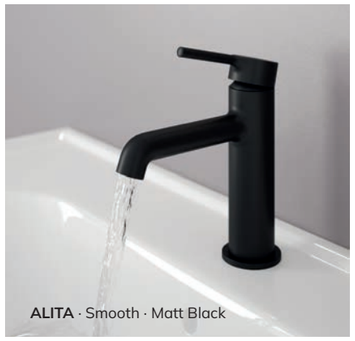

ALITA · Smooth · Matt Black

ALITA · Smooth · Brushed Gold

ALITA · Knurled · Brushed Nickel

Knurled & Smooth Handles Included

Cold Start Technology

Be cool with effortless control over your water temperature. The SONAS ALITA range with cold start technology allows you to save energy and provides the perfect balance of sustainable modern luxury.

ALITA · Smooth · Wall Mounted Basin Mixer · Brushed Nickel

ALITA · Knurled · Floorstanding Bath Shower Mixer · Matt Black

ALITA

Basin Mixer

Min. operating pressure: 1 bar

Chrome	UBR0119	**£175**
Matt Black	UBR0120	**£195**
Brushed Gold	UBR0122	**£195**
Brushed Nickel	UBR0121	**£195**

Unified Water Label 5 l/min

Wall Mounted Basin Mixer

Min. operating pressure: 1 bar

Chrome	UBR0127	**£195**
Matt Black	UBR0128	**£245**
Brushed Gold	UBR0130	**£245**
Brushed Nickel	UBR0129	**£245**

Unified Water Label 5 l/min

Spout projection 180mm. Basin waste not included with wall mounted basin mixer.

Freestanding Basin Mixer

Min. operating pressure: 1 bar

Chrome	UBR0123	**£230**
Matt Black	UBR0124	**£275**
Brushed Gold	UBR0126	**£275**
Brushed Nickel	UBR0125	**£275**

Unified Water Label 5 l/min

Basin waste not included with freestanding basin mixer

Bath Filler NEW

Min. operating pressure: 1 bar

Chrome	UBR0197	**£315**
Matt Black	UBR0198	**£345**
Brushed Gold	UBR0199	**£345**
Brushed Nickel	UBR0200	**£345**

Floorstanding Bath Shower Mixer

Min. operating pressure: 1 bar

Chrome	UBR0146	**£850**
Matt Black	UBR0147	**£995**
Brushed Gold	UBR0149	**£995**
Brushed Nickel	UBR0148	**£995**

Comes with easy fit box

Please Note**: Floorstanding bath shower mixer must be supplied to your installer at **first fix stage.

Bath Shower Mixer NEW

Min. operating pressure: 1 bar

Chrome	UBR0201	**£365**
Matt Black	UBR0202	**£395**
Brushed Gold	UBR0203	**£395**
Brushed Nickel	UBR0204	**£395**

All Measurements in mm. All Prices include VAT

Standard & Cloakroom Basin Mixers include a colour coordinated click clack basin waste

Before purchasing taps & showers, ensure your site meets minimum operating pressure requirements. Please consult your plumber.

HAKK

Chrome · Matt Black · Brushed Gold · Brushed Nickel · PVD COATED · 15 YEAR WARRANTY

NEW RANGE

HAKK · Basin Mixer · Brushed Nickel

Cold Start Technology

Be cool with effortless control over your water temperature. The SONAS ALITA range with cold start technology allows you to save energy and provides the perfect balance of sustainable modern luxury.

All Measurements in mm. All Prices include VAT

HAKK · Basin Mixer · Matt Black

Basin Mixer

Min. operating pressure: 1 bar

Unified Water Label · 5 l/min

Chrome	UBR0182	£175	Brushed Gold	UBR0184	£195
Matt Black	UBR0183	£195	Brushed Nickel	UBR0185	£195

Freestanding Basin Mixer

Min. operating pressure: 1 bar

Unified Water Label · 5 l/min

Chrome	UBR0187	£225	Brushed Gold	UBR0189	£275
Matt Black	UBR0188	£275	Brushed Nickel	UBR0190	£275

Basin waste not included with freestanding basin mixer

Wall Mounted Basin Mixer

Min. operating pressure: 1 bar

Unified Water Label · 5 l/min

Chrome	UBR0192	£195	Brushed Gold	UBR0194	£245
Matt Black	UBR0193	£245	Brushed Nickel	UBR0195	£245

Standard & Cloakroom Basin Mixers include a colour coordinated click clack basin waste

Before purchasing taps & showers, ensure your site meets minimum operating pressure requirements. Please consult your plumber.

SCOPE

Chrome · Matt Black · Brushed Gold · Brushed Nickel · PVD COATED · 15 YEAR WARRANTY

SCOPE · Basin Mixer · Matt Black

SCOPE · Basin Mixer · Chrome

Basin Mixer
Min. operating pressure: 1 bar
Unified Water Label 5 l/min

Chrome		UBR0150	**£185**	Brushed Gold		UBR0153	**£245**
Matt Black		UBR0151	**£245**	Brushed Nickel		UBR0152	**£245**

Freestanding Basin Mixer
Min. operating pressure: 1 bar
Unified Water Label 5 l/min

Chrome		UBR0154	**£240**	Brushed Gold		UBR0157	**£280**
Matt Black		UBR0155	**£280**	Brushed Nickel		UBR0156	**£280**

Basin waste not included with freestanding basin mixer

Wall Mounted Basin Mixer
Min. operating pressure: 1 bar
Unified Water Label 5 l/min

Chrome		UBR0158	**£265**	Brushed Gold		UBR0161	**£340**
Matt Black		UBR0159	**£340**	Brushed Nickel		UBR0160	**£340**

Deck Mounted Bath Filler
Min. operating pressure: 1 bar

Chrome		UBR0162	**£210**	Brushed Gold		UBR0165	**£280**
Matt Black		UBR0163	**£280**	Brushed Nickel		UBR0164	**£280**

Deck Mounted Bath Shower Mixer
Min. operating pressure: 1 bar

Chrome		UBR0166	**£265**	Brushed Gold		UBR0169	**£345**
Matt Black		UBR0167	**£345**	Brushed Nickel		UBR0168	**£345**

All Measurements in mm. All Prices include VAT

Standard & Cloakroom Basin Mixers include a colour coordinated click clack basin waste

Before purchasing taps & showers, ensure your site meets minimum operating pressure requirements. Please consult your plumber.

LUTA

Chrome · Matt Black · Brushed Gold · Brushed Nickel

PVD COATED · 15 YEAR WARRANTY

LUTA · Basin Mixer · Chrome

LUTA · Freestanding Basin Mixer · Brushed Nickel

Basin Mixer

Min. operating pressure: 1 bar

Chrome	UBR0131	£175
Matt Black	UBR0140	£225
Brushed Gold	UBR0142	£225
Brushed Nickel	UBR0141	£225

Unified Water Label · 5 l/min

Freestanding Basin Mixer

Min. operating pressure: 1 bar

Chrome	UBR0132	£225
Matt Black	UBR0143	£275
Brushed Gold	UBR0145	£275
Brushed Nickel	UBR0144	£275

Unified Water Label · 5 l/min

Basin waste not included with freestanding basin mixer

Bath Filler NEW

Min. operating pressure: 1 bar

Chrome	UBR0205	£315
Matt Black	UBR0206	£345
Brushed Gold	UBR0207	£345
Brushed Nickel	UBR0208	£345

Bath Shower Mixer NEW

Min. operating pressure: 1 bar

Chrome	UBR0209	£365
Matt Black	UBR0210	£395
Brushed Gold	UBR0211	£395
Brushed Nickel	UBR0212	£395

Standard & Cloakroom Basin Mixers include a colour coordinated click clack basin waste

Before purchasing taps & showers, ensure your site meets minimum operating pressure requirements. Please consult your plumber.

NORFOLK

Chrome | Matt Black | Brushed Gold | PVD COATED

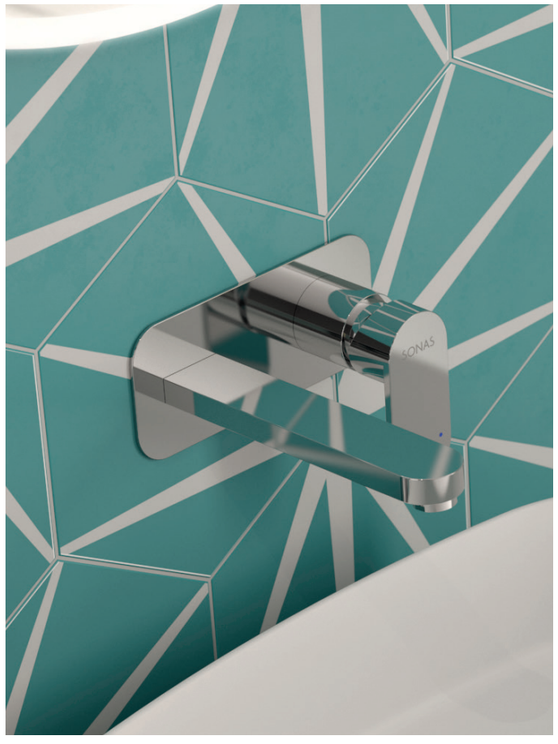

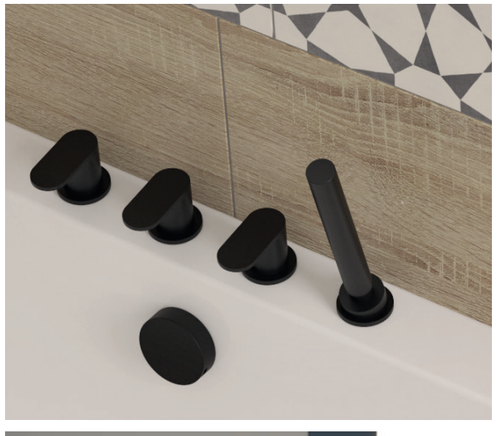

Cloakroom Basin Mixer

Min. operating pressure: 0.2 bar

Chrome	UBR0095	**£95**
Matt Black	UBR0051	**£130**
Brushed Gold	UBR0073	**£130**

Basin Mixer

Min. operating pressure: 0.2 bar

Chrome	UBR0093	**£115**
Matt Black	UBR0047	**£140**
Brushed Gold	UBR0069	**£140**

Basin waste not included with freestanding basin mixer

Freestanding Basin Mixer

Min. operating pressure: 0.5 bar

Chrome	UBR0094	**£190**
Matt Black	UBR0050	**£240**
Brushed Gold	UBR0072	**£240**

Basin Taps

Min. operating pressure: 0.2 bar

Chrome	CORN111	**£110**

Bidet Mixer

Min. operating pressure: 0.2 bar

Chrome	CORN008	**£115**

Spout projection192mm.
Basin waste not included with wall mounted basin mixer

Wall Mounted Basin Mixer

Min. operating pressure: 0.5 bar

Chrome	UBR0105	**£205**
Matt Black	UBR0053	**£240**
Brushed Gold	UBR0075	**£240**

Bath Filler

Min. operating pressure: 0.2 bar

Chrome	CORN003	**£190**
Matt Black	UBR0048	**£225**
Brushed Gold	UBR0070	**£225**

[inc. handset]

Bath Shower Mixer

Min. operating pressure: 0.2 bar

Chrome	CORN004	**£220**
Matt Black	UBR0049	**£280**
Brushed Gold	UBR0071	**£280**

PLEASE NOTE*
*Floorstanding bath shower mixer must be supplied to your installer at **first fix** stage.*

**This product requires a bath filler.*
See page 224

4 Hole
Bath Shower Mixer

Min. operating pressure: 1 bar

Chrome	CORN009	**£280**
Matt Black	UBR0052	**£310**
Brushed Gold	UBR0074	**£310**

Floorstanding
Bath Shower Mixer

Min. operating pressure: 1 bar

Chrome	CORN001	**£610**
Matt Black	UBR0056	**£630**
Brushed Gold	UBR0078	**£630**

Standard & Cloakroom Basin Mixers include a colour coordinated click clack basin waste

Before purchasing taps & showers, ensure your site meets minimum operating pressure requirements. Please consult your plumber.

CONTOUR

Chrome | Matt Black | Brushed Gold | PVD COATED

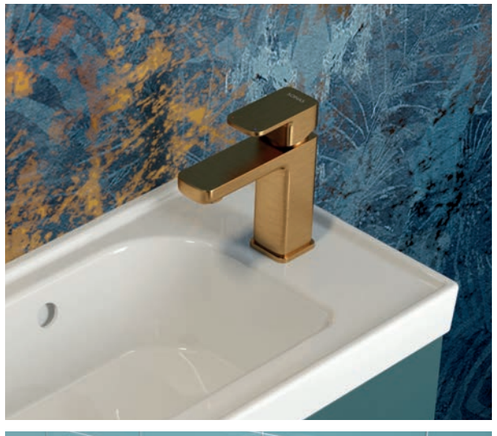

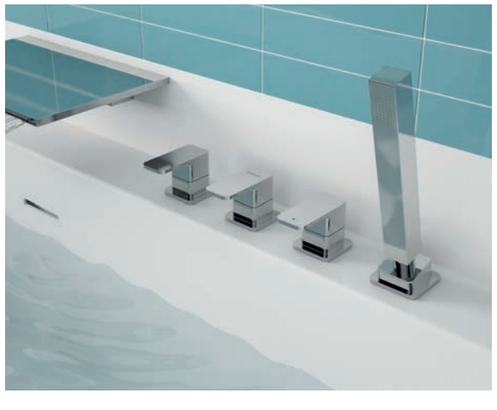

Cloakroom Basin Mixer

Min. operating pressure: 0.2 bar

Chrome	UBR0097	**£120**
Matt Black	UBR0061	**£155**
Brushed Gold	UBR0083	**£155**

Basin Mixer

Min. operating pressure: 0.2 bar

Chrome	UBR0096	**£145**
Matt Black	UBR0060	**£180**
Brushed Gold	UBR0082	**£180**

Basin waste not included with Freestanding basin mixer

Freestanding Basin Mixer

Min. operating pressure: 0.5 bar

Chrome	UBR0098	**£225**
Matt Black	UBR0062	**£260**
Brushed Gold	UBR0084	**£260**

Bidet Mixer

Min. operating pressure: 0.2 bar

Chrome	CCC008	**£120**

Spout projection197mm.
Basin waste not included with wall mounted basin mixer

Wall Mounted Basin Mixer

Min. operating pressure: 0.5 bar

Chrome	UBR0106	**£235**
Matt Black	UBR0064	**£260**
Brushed Gold	UBR0086	**£260**

PLEASE NOTE*
*Floorstanding bath shower mixer must be supplied to your installer at **first fix** stage.*

Floorstanding Bath Shower Mixer

Min. operating pressure: 1 bar

Chrome	CCC001	**£610**
Matt Black	UBR0065	**£630**
Brushed Gold	UBR0087	**£630**

Bath Filler

Min. operating pressure: 0.2 bar

Chrome	CCC003	**£245**
Matt Black	UBR0059	**£280**
Brushed Gold	UBR0081	**£280**

[inc. handset]

Bath Shower Mixer

Min. operating pressure: 0.2 bar

Chrome	CCC004	**£250**
Matt Black	UBR0058	**£340**
Brushed Gold	UBR0080	**£340**

**This product requires a bath filler.*
See page 224

4 Hole Bath Shower Mixer

Min. operating pressure: 1 bar

Chrome	CCC009	**£285**
Matt Black	UBR0063	**£345**
Brushed Gold	UBR0085	**£345**

Standard & Cloakroom Basin Mixers include a colour coordinated click clack basin waste

Before purchasing taps & showers, ensure your site meets minimum operating pressure requirements. Please consult your plumber.

Basin Mixer
Min. operating pressure: 0.2 bar

UBR0103	**£120**

Cloakroom Basin Mixer
Min. operating pressure: 0.2 bar

UBR0104	**£95**

Bath Filler
Min. operating pressure: 0.5 bar

TORC003	**£195**

Bath Shower Mixer
Min. operating pressure: 0.5 bar

TORC004	**£225**

[inc. handset]

Basin Mixer
Min. operating pressure: 0.2 bar

UBR0101	**£115**

Cloakroom Basin Mixer
Min. operating pressure: 0.2 bar

UBR0102	**£95**

Bath Filler
Min. operating pressure: 0.5 bar

NEO003	**£225**

Bath Shower Mixer
Min. operating pressure: 0.5 bar

NEO004	**£245**

[inc. handset]

All Measurements in mm. All Prices include VAT

Basin Mixer
Min. operating pressure: 0.2 bar

UBR0092	**£150**

Bath Filler
Min. operating pressure: 0.5 bar

CLTHOR003	**£250**

Bath Shower Mixer
Min. operating pressure: 0.5 bar

CLTHOR004	**£305**

[inc. handset]

Basin Mixer
Min. operating pressure: 0.2 bar

Chrome	UBR0099	**£165**
Brushed Gold	GJAS002	**£190**

Cloakroom Basin Mixer
Min. operating pressure: 0.2 bar

UBR0100	**£110**

Bath Filler
Min. operating pressure: 0.5 bar

JAS003	**£230**

Bath Shower Mixer
Min. operating pressure: 0.5 bar

JAS004	**£260**

[inc. handset]

Standard & Cloakroom Basin Mixers include a colour coordinated click clack basin waste

Before purchasing taps & showers, ensure your site meets minimum operating pressure requirements. Please consult your plumber.

CORBY

Chrome

Matt Black

Cloakroom Basin Mixer

Min. operating pressure: 0.2 bar

Chrome	MYKCOR006	**£95**
Matt Black	BLKCOR006	**£135**

Basin Mixer

Min. operating pressure: 0.2 bar

Chrome	MYKCOR002	**£130**
Matt Black	BLKCOR002	**£150**

Basin waste not included with Freestanding basin mixer

Freestanding Basin Mixer

Min. operating pressure: 0.5 bar

Chrome	MYKCOR005	**£195**

Wall Mounted Basin Mixer

Min. operating pressure: 0.5 bar

Chrome	MYKCOR007	**£200**

Spout projection170mm.
Basin waste not included with wall mounted basin mixer

Bath Filler

Min. operating pressure: 0.2 bar

Chrome	MYKCOR003	**£190**
Matt Black	BLKCOR003	**£225**

[inc. handset]

Bath Shower Mixer

Min. operating pressure: 0.2 bar

Chrome	MYKCOR004	**£240**
Matt Black	BLKCOR004	**£295**

Floorstanding Bath Shower Mixer

Min. operating pressure: 1 bar

Chrome	MYKCOR001	**£610**

PLEASE NOTE*
Floorstanding bath shower mixer must be supplied to your installer at ***first fix*** *stage.*

All Measurements in mm. All Prices include VAT

Standard & Cloakroom Basin Mixers include a colour coordinated click clack basin waste

Before purchasing taps & showers, ensure your site meets minimum operating pressure requirements. Please consult your plumber.

HARROW

Chrome

Matt Black

Cloakroom Basin Mixer

Min. operating pressure: 0.2 bar

Chrome	CORH006	**£95**
Matt Black	BLKH006	**£110**

Basin Mixer

Min. operating pressure: 0.2 bar

Chrome	CORH002	**£100**
Matt Black	BLKH002	**£125**

Basin waste not included with freestanding basin mixer

Freestanding Basin Mixer

Min. operating pressure: 0.5 bar

Chrome	CORH005	**£145**
Matt Black	BLKH005	**£160**

Basin Taps

Min. operating pressure: 0.2 bar

Chrome	CORH111	**£95**

Bath Filler

Min. operating pressure: 0.2 bar

Chrome	CORH003	**£145**
Matt Black	BLKH003	**£225**

[inc. handset]

Bath Shower Mixer

Min. operating pressure: 0.2 bar

Chrome	CORH004	**£175**
Matt Black	BLKH004	**£240**

Wall Mounted Basin Mixer

Min. operating pressure: 0.5 bar

Chrome	MAYF007CP	**£145**
Matt Black	BLKH007	**£185**

Spout projection 192mm. Basin waste not included with wall mounted basin mixer

Floorstanding Bath Shower Mixer

Min. operating pressure: 1 bar

Chrome	CORH001	**£545**
Matt Black	BLKH001	**£620**

PLEASE NOTE* *Floorstanding bath shower mixer must be supplied to your installer at **first fix** stage.*

All Measurements in mm. All Prices include VAT

Standard & Cloakroom Basin Mixers include a colour coordinated click clack basin waste

Before purchasing taps & showers, ensure your site meets minimum operating pressure requirements. Please consult your plumber.

BINGLEY

Chrome

Matt Black

Cloakroom Basin Mixer

Min. operating pressure: 0.2 bar

Chrome		MYKBIN006	**£115**
Matt Black		BLKBIN006	**£135**

Basin Mixer

Min. operating pressure: 0.2 bar

Chrome		MYKBIN002	**£145**
Matt Black		BLKBIN002	**£150**

Basin waste not included with freestanding basin mixer

Freestanding Basin Mixer

Min. operating pressure: 0.5 bar

Chrome		MYKBIN005	**£190**

Spout projection 180mm.
Basin waste not included with wall mounted basin mixer

Wall Mounted Basin Mixer

Min. operating pressure: 0.5 bar

Chrome		MYKBIN007	**£230**

Bath Filler

Min. operating pressure: 0.2 bar

Chrome		MYKBIN003	**£230**
Matt Black		BLKBIN003	**£295**

[inc. handset]

Bath Shower Mixer

Min. operating pressure: 0.2 bar

Chrome		MYKBIN004	**£245**
Matt Black		BLKBIN004	**£340**

All Measurements in mm. All Prices include VAT

SERIES C

Basin Mixer

Min. operating pressure: 0.2 bar

MAYC005CP	**£110**

Basin Taps

Min. operating pressure: 0.2 bar

MAYC001CP	**£95**

PLEASE NOTE*
*Floorstanding bath shower mixer must be supplied to your installer at **first fix** stage.*

Floorstanding Bath Shower Mixer*

Min. operating pressure: 1 bar

MAYC0011	**£545**

Bath Taps

Min. operating pressure: 0.2 bar

MAYC002CP	**£125**

Bath Filler

Min. operating pressure: 0.2 bar

MAYC003CP	**£185**

[inc. handset]

Bath Shower Mixer

Min. operating pressure: 0.2 bar

MAYC004CP	**£235**

Standard & Cloakroom Basin Mixers include a colour coordinated click clack basin waste

Before purchasing taps & showers, ensure your site meets minimum operating pressure requirements. Please consult your plumber.

QUARTZ

Cloakroom Basin Mixer

Min. operating pressure: 0.2 bar

MAYQ0006 **£90**

Basin Mixer

Min. operating pressure: 0.2 bar

MAYQ005CP **£95**

Freestanding Basin Mixer

Min. operating pressure: 0.5 bar

MAYQ0025 **£190**

Bath Filler

Min. operating pressure: 0.2 bar

MAYQ003CP **£180**

[inc. handset]

Bath Shower Mixer

Min. operating pressure: 0.2 bar

MAYQ004CP **£220**

All Measurements in mm. All Prices include VAT

COSMOS

Basin Mixer

Min. operating pressure: 0.2 bar

T5002 **£65**

Bath Filler

Deck Mounted

Min. operating pressure: 0.1 bar

MAYTT005 **£105**

[inc. handset]

Bath Shower Mixer

Deck Mounted

Min. operating pressure: 0.1 bar

MAYTT007 **£145**

Bath Filler

Min. operating pressure: 0.5 bar

MAYCOSBFCP **£110**

[inc. handset]

Bath Shower Mixer

Min. operating pressure: 0.5 bar

MAYCOS003 **£125**

CONTRACT

Alpha Basin Mixer

Min. operating pressure: 0.2 bar

USHALPCP **£50**

Basin Taps

Min. operating pressure: 0.1 bar

MAYMH01CP **£45**

Basin Mixer

Min. operating pressure: 0.1 bar

MAYMH05CP **£80**

Bath Filler

Min. operating pressure: 0.1 bar

MAYMH03CP **£95**

Bath Taps

Min. operating pressure: 0.1 bar

MAYMH02CP **£45**

[inc. handset]

Bath Shower Mixer

Min. operating pressure: 0.1 bar

MAYMH04CP **£105**

Standard & Cloakroom Basin Mixers include a colour coordinated click clack basin waste

Before purchasing taps & showers, ensure your site meets minimum operating pressure requirements. Please consult your plumber.

SUTTON

Basin Mixer

Min. operating pressure: 0.2 bar

CORT002	**£150**

Bath Filler

Min. operating pressure: 0.2 bar

CORT003	**£185**

[inc. handset]

Bath Shower Mixer

Min. operating pressure: 0.2 bar

CORT004	**£235**

All Measurements in mm. All Prices include VAT

TRADITIONAL LEVER

Basin Mixer

Min. operating pressure: 0.2 bar

MYKTL005	**£110**

Bidet Mixer

Min. operating pressure: 0.2 bar

MYKTL006	**£115**

Basin Taps

Min. operating pressure: 0.2 bar

MYKTL001	**£90**

Bath Taps

Min. operating pressure: 0.2 bar

MYKTL002	**£95**

Bath Filler

Min. operating pressure: 0.2 bar

MYKTL003	**£195**

[inc. handset]

Bath Shower Mixer

Min. operating pressure: 0.2 bar

MYKTL004	**£240**

Floorstanding
Bath Shower Mixer*

Min. operating pressure: 1 bar

MYKTL0011	**£620**

PLEASE NOTE*
*Floorstanding bath shower mixer must be supplied to your installer at **first fix** stage.*

Standard & Cloakroom Basin Mixers include a colour coordinated click clack basin waste

Before purchasing taps & showers, ensure your site meets minimum operating pressure requirements. Please consult your plumber.

SURREY

Basin Mixer

Min. operating pressure: 0.2bar

CORSR002 **£110**

Basin Taps

Min. operating pressure: 0.2bar

CORSR001 **£110**

Bidet Mixer

Min. operating pressure: 0.2bar

CORSR006 **£110**

Bath Filler

Min. operating pressure: 0.2bar

CORSR003 **£195**

[inc. handset]

Bath Shower Mixer

Min. operating pressure: 0.2bar

CORSR004 **£255**

PLEASE NOTE*
*Floorstanding bath shower mixer must be supplied to your installer at **first fix** stage.*

Floorstanding
Bath Shower Mixer*

Min. operating pressure: 1 bar

CORSR0011 **£620**

All Measurements in mm. All Prices include VAT

EDWARDIAN

Basin Mixer

Min. operating pressure: 0.1bar

MAY8005CP **£110**

Basin Taps

Min. operating pressure: 0.1bar

MAY8001CP **£75**

Bath Taps

Min. operating pressure: 0.1bar

MAY8002CP **£95**

[inc. handset]

Bath Shower Mixer

Min. operating pressure: 0.1bar

MAY8004CP **£225**

PLEASE NOTE*
*Floorstanding bath shower mixer must be supplied to your installer at **first fix** stage.*

Floorstanding
Bath Shower Mixer*

Min. operating pressure: 1 bar

MAY80011 **£620**

Standard & Cloakroom Basin Mixers include a colour coordinated click clack basin waste

Before purchasing taps & showers, ensure your site meets minimum operating pressure requirements. Please consult your plumber.

ASCOT

Basin Mixer

Min. operating pressure: 0.1 bar

MAY7005CP	**£95**

Basin Taps

Min. operating pressure: 0.1 bar

MAY7001CP	**£55**

Bidet Mixer

Min. operating pressure: 0.1 bar

MAY7006CP	**£110**

Bath Taps

Min. operating pressure: 0.1 bar

MAY7002CP	**£65**

[inc. handset]

Bath Shower Mixer

Min. operating pressure: 0.1 bar

MAY7004CP	**£175**

All Measurements in mm. All Prices include VAT

BOTTLE TRAPS

SYNC

Brass Minimalist Bottle Trap

Chrome	UBR0033	**£70**
Matt Black	UBR0034	**£90**
Brushed Gold	UBR0035	**£90**
Brushed Nickel	UBR0118	**£90**

SYNC

Brass Square Bottle Trap

Chrome	UBR0030	**£80**
Matt Black	UBR0031	**£95**
Brushed Gold	UBR0032	**£95**

Traditional

Bottle Trap

Chrome	TBT400	**£50**

WASTE FITTINGS

Brass Basin Waste

with plastic plug & chain

UBR0038	**£16**

SYNC 1¼" Rotary

plug basin waste chrome

UBR0017	**£16**

Brass Basin Waste

with metal plug & chain

UBR0037	**£16**

SYNC 1¼" Chrome

Click Clack basin waste

Chrome	UBR0014	**£16**
Matt White	UBR0139	**£27**
Matt Black	UBR0015	**£27**
Brushed Gold	UBR0016	**£27**
Brushed Nickel	UBR0117	**£27**

SHOWERS

Discover a world of exceptional showering experiences with our stunning collection of Showers. Embrace contemporary or traditional designs that effortlessly elevate the aesthetic appeal of your bathroom. Our showers are not only visually striking but also built to last, showcasing unrivalled durability and unparalleled quality. Choose from an extensive range of finishes including chrome, brushed gold, matt black, and nickel, allowing you to perfectly match your shower to your style. Embracing sustainability, our showers are designed to conserve water without compromising on performance, ensuring an eco-friendly showering experience. Immerse yourself in the soothing and invigorating effects of a shower, washing away the stresses of the day and achieving mental clarity. Elevate your bathroom with our exceptional shower collection, combining style, functionality, and sustainable values.

Shower Guide

EXPOSED SHOWERS

Exposed Showers

Exposed showers are surface mounted onto the finished tiled wall in the showering area. All hand-showers, overhead rain heads, diverters and pipework are integrated into one exposed kit for greater ease.

Thermostatic Showers

A thermostatic shower valve features a special cartridge that responds to fluctuations to inlet water temperature and flow rates. These enable you to maintain a constant, safe water temperature while using your shower.

CONCEALED SHOWERS

Concealed Showers

Concealed showers require the body of the valve to be installed behind the wall, with a trim kit fixed to the finished tile. These showers create a minimalist aesthetic by creating clean lines and reducing clutter.

Dual Control – Dual Outlet

Similar in appearance to the dual control shower valve, the diverter option allows you to switch between two different water outlets. This is ideal for combining a rain head and hand shower option.

Dual Control – Single Outlet

A dual control shower valve allows you to operate your shower with one single water outlet. The second control enables you to adjust the water temperature to match your desired comfort level.

Triple Control – Dual Outlet

A triple control valve allows you to run two separate water outlets at the same time. This feature is ideal for running a rain head and body jets simultaneously. The third control adjusts the water temperature to your comfort.

Triple Control – Triple Outlet

A triple control valve with diverter gives the ability to run two separate outlets simultaneously, such as a rain head and body jets. The diverter also allows you to switch from a rain head to a hand shower, if needed.

Tip: We consider your choice of concealed or exposed shower valve as first fix decision. A concealed shower valve is installed in a void before tiles are installed. Choosing this option should be decided and communicated to your installer early in your decision making process.

ALITA

Rain Thermostatic Shower Kit

Chrome | Matt Black | Brushed Gold | Brushed Nickel

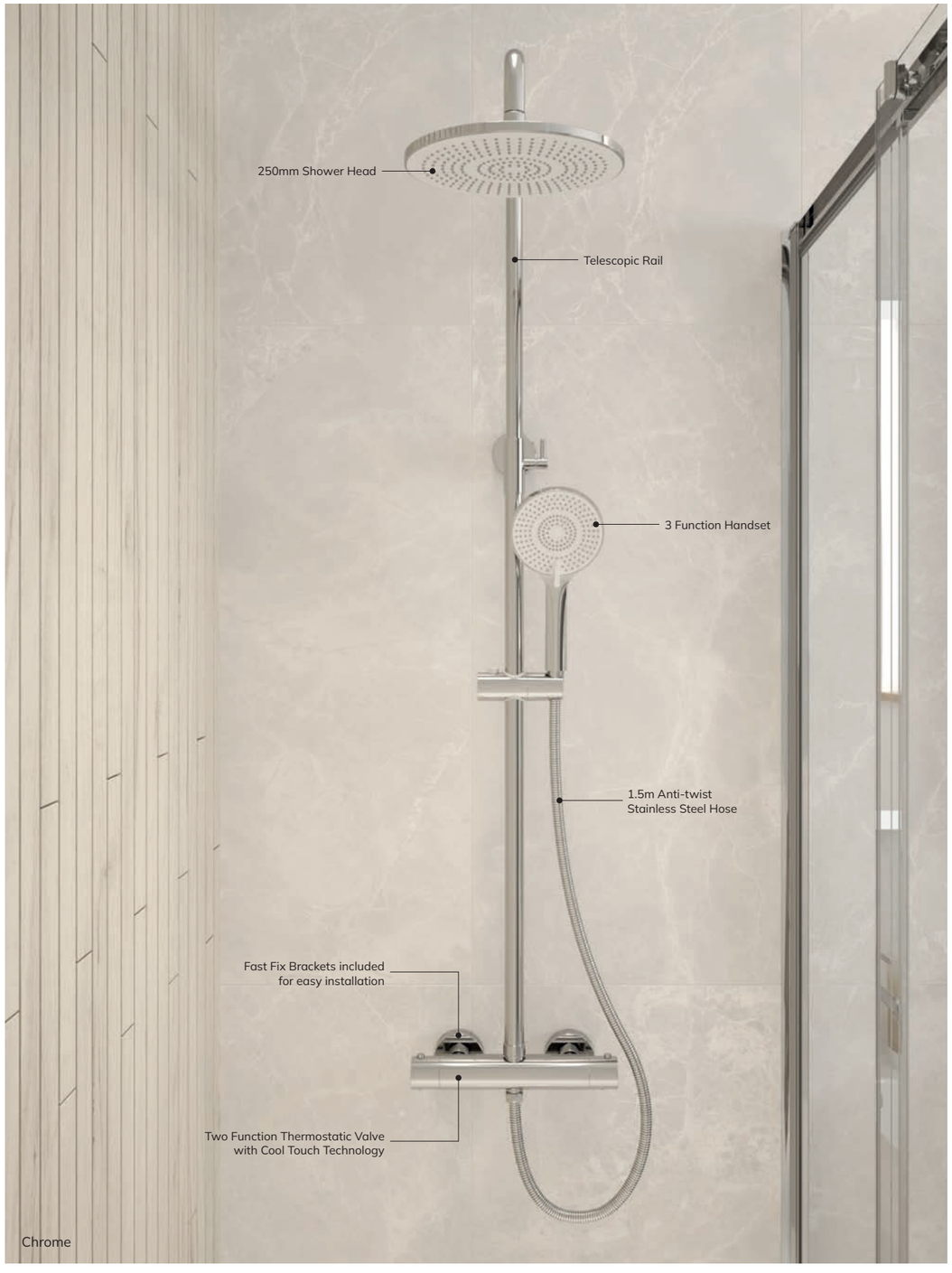

- Two Function Thermostatic Shower Valve
- Cool Touch Technology
- Built In Diverter
- Fast Fix Brackets Included
- 3 Function Handset
- 250mm Shower Head
- 1.5m Anti-twist Stainless Steel Hose
- Min. operating pressure: 0.5 bar

Chrome	USH0024	£395	Brushed Gold	USH0026	£495
Matt Black	USH0025	£495	Brushed Nickel	USH0027	£495

PVD COATED | 15 YEAR WARRANTY | COOL TOUCH | ANTI SCALD

Unified Water Label 6 l/min

When fitted with supplied flow restrictor

WRAS APPROVED PRODUCT

All Measurements in mm. All Prices include VAT

NEW

ALITA

Rain Square Thermostatic Shower Kit

- Two Function Thermostatic Shower Valve
- Cool Touch Technology
- Built In Diverter
- Fast Fix Brackets Included
- 3 Function Handset
- 250mm Shower Head
- 1.5m Anti-twist Stainless Steel Hose
- Min. operating pressure: 0.5 bar

USH0153	**£450**

15 YEAR WARRANTY · COOL TOUCH · ANTI SCALD

Unified Water Label 6 l/min

When fitted with supplied flow restrictor

WRAS APPROVED PRODUCT

ALITA

Round Thermostatic Bar Valve Kit

- Exposed thermostatic shower valve
- Cool Touch Technology
- Round slide rail kit
- 1.5m Anti-twist Stainless Steel Hose
- Fast fit bracket included
- Minimum operating pressure: 0.2 bar (dynamic)

USH0023	**£225**

15 YEAR WARRANTY · COOL TOUCH · ANTI SCALD

Unified Water Label 6 l/min

When fitted with supplied flow restrictor

WRAS APPROVED PRODUCT

All Measurements in mm. All Prices include VAT

ALITA Knurled Thermostatic Shower Kit 1

Chrome | Matt Black | Brushed Gold | Brushed Nickel

15 YEAR WARRANTY

Concealed Shower Valve Twin Outlet

+

Slide Rail Kit & Wall Elbow

+

250mm Shower Head

+

345mm Wall Mounted Arm

OR

200mm Ceiling Mounted Arm

		With Ceiling Arm	With Wall Arm	
Chrome		USH0135	USH0096	**£645**
Matt Black		USH0136	USH0097	**£745**
Brushed Gold		USH0137	USH0098	**£745**
Brushed Nickel		USH0138	USH0099	**£745**

All Measurements in mm. All Prices include VAT

ALITA Knurled Thermostatic Shower Kit 2

Chrome | Matt Black | Brushed Gold | Brushed Nickel

15 YEAR WARRANTY

Concealed Shower Valve Twin Outlet

+

Round Handset Kit

+

250mm Stainless Steel Shower Head

+

345mm Wall Mounted Arm

OR

200mm Ceiling Mounted Arm

		With Ceiling Arm	With Wall Arm	
Chrome		USH0139	USH0100	**£645**
Matt Black		USH0140	USH0101	**£745**
Brushed Gold		USH0141	USH0102	**£745**
Brushed Nickel		USH0142	USH0103	**£745**

ALITA Knurled Thermostatic Bath Kit 1

Chrome | Matt Black | Brushed Gold | Brushed Nickel | 15 YEAR WARRANTY

Concealed Shower Valve Twin Outlet

+

Slide Rail Kit & Wall Elbow

+

Round Overflow Bath Filler & Waste

Chrome		USH0104	**£595**
Matt Black		USH0105	**£665**
Brushed Gold		USH0106	**£665**
Brushed Nickel		USH0107	**£665**

ALITA Knurled Thermostatic Bath Kit 2

Chrome | Matt Black | Brushed Gold | Brushed Nickel | 15 YEAR WARRANTY

Concealed Shower Valve Twin Outlet

+

Round Handset Kit

+

Round Overflow Bath Filler & Waste

Chrome		USH0108	**£545**
Matt Black		USH0109	**£625**
Brushed Gold		USH0110	**£625**
Brushed Nickel		USH0111	**£625**

ALITA Knurled Thermostatic Bath Kit 3

Chrome | Matt Black | Brushed Gold | Brushed Nickel

15 YEAR WARRANTY

Concealed Shower Valve Triple Outlet

+

Round Handset Kit

+

Round Overflow Bath Filler & Waste

+

250mm Stainless Steel Shower Head

+

345mm Wall Mounted Arm

OR

200mm Ceiling Mounted Arm

		With Ceiling Arm	With Wall Arm	
Chrome		USH0143	USH0112	**£745**
Matt Black		USH0144	USH0113	**£895**
Brushed Gold		USH0145	USH0114	**£895**
Brushed Nickel		USH0146	USH0115	**£895**

All Measurements in mm. All Prices include VAT

ALITA Knurled Thermostatic Bath Kit 4

Chrome | Matt Black | Brushed Gold | Brushed Nickel

15 YEAR WARRANTY

Concealed Shower Valve Twin Outlet

+

Round Overflow Bath Filler & Waste

+

250mm Stainless Steel Shower Head

+

345mm Wall Mounted Arm

OR

200mm Ceiling Mounted Arm

		With Ceiling Arm	With Wall Arm	
Chrome		USH0147	USH0116	**£595**
Matt Black		USH0148	USH0117	**£685**
Brushed Gold		USH0149	USH0118	**£685**
Brushed Nickel		USH0150	USH0119	**£685**

Concealed Thermostatic Shower Valves

Matt Black

Brushed Gold

Brushed Nickel

ALITA Knurled

PVD COATED

Concealed Thermostatic Shower Valve

Knurled Handles provide additional grip

Min operating pressure: 0.5 bar

		2 Outlet		3 Outlet	
Chrome		USH0088	**£350**	USH0089	**£450**
Matt Black		USH0090	**£395**	USH0091	**£495**
Brushed Gold		USH0092	**£395**	USH0093	**£495**
Brushed Nickel		USH0094	**£395**	USH0095	**£495**

ALITA Round

Dual Control

Min. operating pressure: 0.5 bar

1 Outlet	QRSV21CP	**£335**
2 Outlet	QRSV22CP	**£345**

Triple Control

Min. operating pressure: 0.5 bar

2 Outlet	QRSV32CP	**£415**
3 Outlet	QRSV33CP	**£425**

Round Handset & Valve Horizontal Dual Control

Min. operating pressure: 0.5 bar

2 Outlet	USH0018	**£445**

ALITA Square

Dual Control

Min. operating pressure: 0.5 bar

1 Outlet	QSQSV21CP	**£335**
2 Outlet	QSQSV22CP	**£345**

Triple Control

Min. operating pressure: 0.5 bar

2 Outlet	QSQSV32CP	**£415**
3 Outlet	QSQSV33CP	**£425**

Square Handset & Valve Horizontal Dual Control

Min. operating pressure: 0.5 bar

2 Outlet	USH0019	**£445**

Manual Shower Valves

Min. operating pressure: 0.5 bar

CONTOUR

Manual shower valve with DIVERTER

CCC612CR **£150**

CONTOUR

Manual shower valve

CCC602CR **£99**

NORFOLK

Manual shower valve with DIVERTER

NOR612CR **£150**

NORFOLK

Manual shower valve

NOR602CR **£99**

All Measurements in mm. All Prices include VAT

Thermostatic Bath Shower Mixers

FORM Wall Mounted

Thermostatic Bath Shower Mixer
Includes Fastfix Brackets
Min. operating pressure: 0.5 bar

Chrome	USH0126	**£235**	
Matt Black	USH0127	**£295**	
Brushed Gold	USH0128	**£295**	
Brushed Nickel	USH0129	**£295**	

FORM Deck Mounted
Thermostatic Bath Shower Mixer
Min. operating pressure: 0.5 bar

USH0130	**£280**	

ASTRA
Thermostatic Bath Shower Mixer
Wall Mounted

Built in diverter
Min. operating pressure: 0.5 bar

ETAST400	**£345**

ASTRA
Thermostatic Bath Shower Mixer
Deck Mounted

Built in diverter
Min. operating pressure: 0.5 bar

ETAST40DM	**£385**

COSMOS
Thermostatic Bath Shower Mixer
Deck Mounted

Min. operating pressure: 1 bar

MYKCOS400	**£280**

*Hose and shower head not included with thermostatic bath shower mixers

All Measurements in mm. All Prices include VAT

Slide Rail Kits

ALITA Slide Rail Kit

PVD COATED

- Stainless Steel Rail
- 3 Function Handset
- 1.7m Anti-twist Stainless Steel Hose
- Wall Elbow Included
- Optional 6l/min Flow Restrictor Included
- Min. operating pressure: 0.5 bar

Chrome	USH0030	**£150**	
Matt Black	USH0031	**£195**	
Brushed Gold	USH0032	**£195**	
Brushed Nickel	USH0033	**£195**	

ALITA Square Slide Rail Kit

- Stainless Steel Rail
- 3 Function Handset
- 1.7m Anti-twist Stainless Steel Hose
- Wall Elbow Included
- Optional 6l/min Flow Restrictor Included
- Min. operating pressure: 0.5 bar

Chrome	USH0029	**£170**

Shower Handsets

ALITA Round Handset

- Brass Pencil Handset
- 1.5m Anti-twist Stainless Steel Hose
- Wall Elbow Included

Chrome	USH0084	**£105**	
Matt Black	USH0085	**£150**	
Brushed Gold	USH0086	**£150**	
Brushed Nickel	USH0087	**£150**	

PVD COATED

MICROPHONE Bath Set

CORBSET2	**£35**

[Does not include wall elbow]

SQUARE Wall Outlet Kit ABS

UBR0013	**£50**

[Includes wall elbow]

ROUND Wall Outlet Kit ABS

UBR0012	**£45**

[Includes wall elbow]

Bath Fillers

SYNC Round Bath Filler

Chrome	UBR0107	**£95**
Matt Black	UBR0108	**£120**
Brushed Gold	UBR0109	**£120**
Brushed Nickel	UBR0116	**£120**

NORFOLK
Brass Bath Spout 195mm

Chrome	NORSPT01	**£65**
Matt Black	UBR0057	**£75**
Brushed Gold	UBR0079	**£75**

CONTOUR
Brass Bath Spout 195mm

Chrome	CCCSPT01	**£65**
Matt Black	UBR0068	**£75**
Brushed Gold	UBR0090	**£75**

Brass
Wall Mounted Bath Filler
W300 x D200mm

GEC6001	**£335**

All Measurements in mm. All Prices include VAT

Shower Heads & Arms

SYNC Round
Thin Stainless Steel Shower Head
250mm

Chrome	USH0048	**£150**
Matt Black	USH0049	**£175**
Brushed Gold	USH0050	**£175**
Brushed Nickel	USH0051	**£175**

SYNC Round
ABS Shower Head
250mm

Chrome	USH0154	**£50**
Matt Black	USH0155	**£60**
Brushed Gold	USH0156	**£60**
Brushed Nickel	USH0157	**£60**

SYNC
Wall Shower Arm
345mm

Chrome	USH0056	**£40**
Matt Black	USH0057	**£50**
Brushed Gold	USH0058	**£50**
Brushed Nickel	USH0059	**£50**

SYNC
Ceiling Shower Arm
200mm

Chrome	USH0061	**£40**
Matt Black	USH0062	**£50**
Brushed Gold	USH0063	**£50**
Brushed Nickel	USH0064	**£50**

Shower Heads & Arms

SYNC Round

200mm Brass Shower Head

USH0044 **£150**

SYNC Round

250mm Brass Shower Head

USH0045 **£180**

SYNC Round

440mm Luxury Wall Shower Arm

USH0055 **£50**

SYNC Square

200mm Brass Shower Head

USH0046 **£180**

SYNC Square

250mm Brass Shower Head

USH0047 **£180**

SYNC Round

114mm Wall Shower Arm

USH0060 **£50**

SYNC Round

230mm Shower Head ABS

USH0052 **£55**

SYNC Round

120mm Shower Head ABS

USH0053 **£50**

SYNC Traditional

8" [200mm] Shower Head

USH0054 **£165**

Shower Accessories

ALITA Chrome Shower Handset

- 3 Function Handset
- 120mm Diameter
- 1/2 connection

USH0034 **£30**

ALITA Chrome Shower Hose

- 1.7m Stainless Steel Hose
- Anti-twist
- Chrome Plated

USH0035 **£25**

SYNC Round Wall Elbow

Chrome	USH0065	**£30**
Matt Black	USH0066	**£35**
Brushed Gold	USH0067	**£35**
Brushed Nickel	USH0068	**£35**

SYNC
Square Wall Elbow

Chrome USH0069 **£35**

Fast Fit Bracket

for exposed T-Bar shower valves

MYK20010CP **£30**

All Measurements in mm. All Prices include VAT

Traditional Thermostatic Shower Kits

ELY Shower Kit

- Thermostatic Shower Valve
- Dual Control
- Traditional Exposed
- Fixed Riser
- Handset
- 8" Traditional shower head
- Min. operating pressure: 0.5 bar

ETELY0001 **£825**

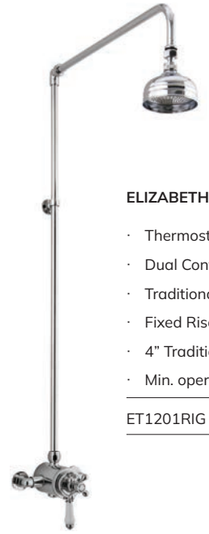

ELIZABETH Shower Kit

- Thermostatic Shower Valve
- Dual Control
- Traditional Exposed
- Fixed Riser
- 4" Traditional Shower Head
- Min. operating pressure: 0.5 bar

ET1201RIG **£599**

Traditional Shower Heads & Valves

ELIZABETH

Thermostatic Shower Valve

Min. operating pressure: 0.5 bar

Exposed Dual Control

ET1201 **£345**

Concealed Dual Control

ET1201CON **£380**

CARYS

Control Thermostatic Shower Valve

Min. operating pressure: 0.5 bar

Concealed Dual Control

ETCAR0001 **£330**

Concealed Triple Control

ETCAR0002 **£405**

TRADITIONAL Slide Rail Kit

with 1.5 metre hose & handset

Min. operating pressure: 0.2 bar

TSR0001 **£199**

8" TRADITIONAL Head

400mm Luxury Traditional Shower arm with 8" [200mm] head

KTSA408 **£205**

8" TRADITIONAL Head

300mm Traditional Shower arm with 8" [200mm] head

KTSA308 **£165**

sonasbathrooms.com

SHOWER ENCLOSURES

Introducing our exquisite range of shower enclosures – the perfect addition to enhance your bathroom's design and reflect your unique personality. With their sleek and sophisticated look, our shower enclosures effortlessly complement the overall layout, elevating the aesthetics of your space.

Our enclosures feature state-of-the-art ClearShield technology, ensuring ease of maintenance and cleaning, while adding value to your investment. No matter the size or shape of your bathroom, ourextensive collection offers a variety of door types to cater to your needs. From spacious to compact, we have the perfect enclosure to fit any space.

Immerse yourself in the showering experience and bring a sense of clarity to your mind, allowing you to revitalise and start your day anew. Step into luxury and indulge in the ultimate showering experience with our exceptional shower enclosures.

Shower Enclosure Guide

Sliding

Sliding door enclosures are space saving in design and are available in a comprehensive range of styles and sizes. These doors can be used in recessed showers, or add a side panel to create a complete shower enclosure.

Folding Doors

Featuring an inward opening mechanism, bifold doors are an excellent option for compact bathrooms. This innovative design serves as a perfect space-saving solution, especially in smaller bathrooms where a forward-opening door could potentially obstruct fixtures located outside the enclosure.

Offset Quadrant

Boasting the same benefits as a quadrant enclosure, the offset enclosures have one side of the tray longer than the other, thereby creating the offset configuration. This allows for more room when showering, while still fitting neatly into the bathroom layout.

Quadrant

With a curved front profile, quadrant enclosures offer a generous showering experience, while allowing for additional floor space within the bathroom.

Hinged

These enclosures are hinged on one side and open outwards, giving you ample space to access your shower. Suitable for use in a recess, or add a side panel to create a full enclosure.

Pivot

Pivot shower enclosure doors open outwards, creating a spacious showering experience while making access to the shower easy. It's important to ensure there is sufficient space in front of the shower when the door pivots open.

Corner Entry

Ideal for bathrooms with limited space, corner entry enclosures serve as excellent space savers. Neatly fitting into any size bathroom, they provide a multitude of advantages. With a range of options available, there's a perfect style and size to suit your bathroom.

Shower Doors

We invite you to elevate your showering experience to new heights. Whether you seek a sleek, modern design or a space-saving solution, our collection offers a variety of shower doors that effortlessly blend with your unique taste and enhance your daily bathing experience.

With a variety of shapes, sizes, and finishes, SONAS shower doors come equipped with Clear Shield, Easy Clean glass protection, and an unwavering Lifetime Warranty. Upgrade your bathroom with the latest trend in shower door design.

	ASPECT	ZEBA	CITY+
Door Height	2000 mm	1950 mm	1900 mm
Glass Thickness	8mm	6mm	6mm
Clear Shield	CLEAR SHIELD	CLEAR SHIELD	CLEAR SHIELD
Quick Fit	QUICK FIT	QUICK FIT	QUICK FIT
Concealment Strip	CONCEALMENT STRIP	CONCEALMENT STRIP	—
Extension Profile	EXTENSION 30 mm PROFILE	EXTENSION 30 mm PROFILE	EXTENSION 20 mm PROFILE
Reversible	✓	✓	✓
Handle Type	STAINLESS STEEL HANDLE	STAINLESS STEEL HANDLE	STAINLESS STEEL HANDLE
Power Shower Compatible	POWER SHOWER	POWER SHOWER	POWER SHOWER
Frame Colour	● ● ●	●	●

ASPECT
Shower Doors

The ASPECT 8mm Shower Door Range offer a stunning focal point to any bathroom. Standing at an impressive 2 metre height, this range fuses function and contemporary design. Available in numerous shapes and sizes, the ASPECT Range will allow you to create a luxurious showering space for you to unwind and indulge yourself in.

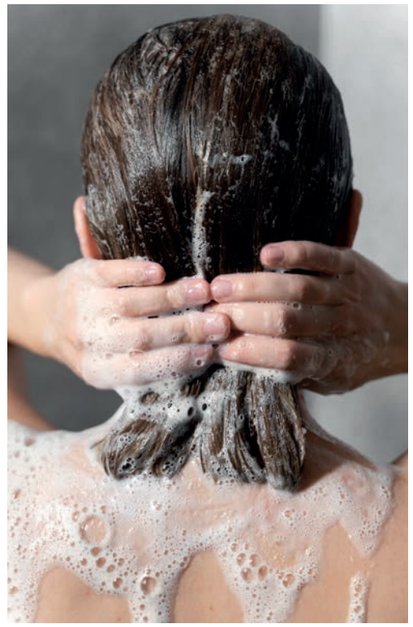

Easy Glide
Rollers

Dual Stainless
Steel handle

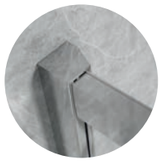

Aluminium
Frame

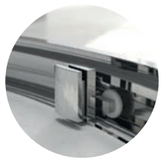

Push Down
Easy Clean Rollers

FOR SHOWER TRAYS See pages 288 - 297

NEW RANGE

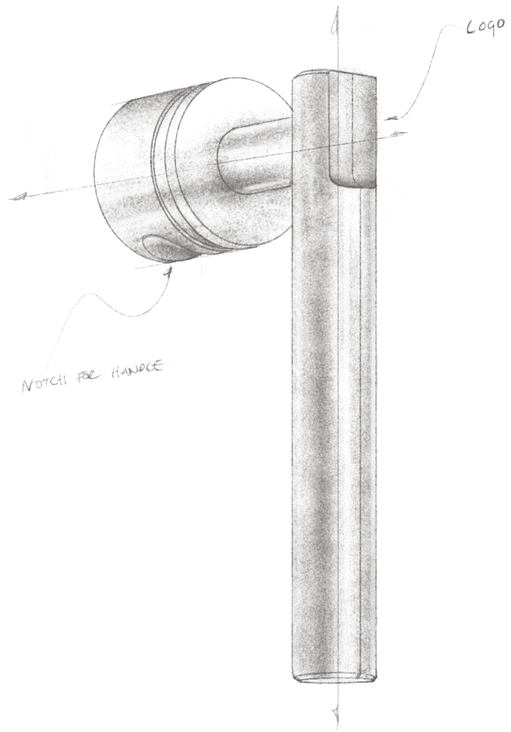

ZEBA
Shower Doors

Bringing together elegance, functionality, and durability, our new range of Zeba 6mm shower enclosures is set to revolutionize bathroom design. With meticulous attention to detail and a focus on exceptional craftsmanship, Zeba is the epitome of beauty and grace.

At a generous height of 1950mm, Zeba shower enclosures create a sense of spaciousness while ensuring privacy and comfort. The Clearshield technology not only enhances the aesthetics but also simplifies cleaning and maintenance, making it ideal for busy homeowners and interior designers seeking hassle-free solutions.

A true standout feature of the Zeba range is the stainless-steel handle, masterfully designed in-house by our talented product designer. Inspired by the concept of graceful beauty, the handle serves as the focal point, adding a touch of elegance to the overall design.

With four door types to choose from, Zeba offers versatility to suit any bathroom layout. Whether you prefer the sleek and contemporary sliding doors, the space-saving bifold doors, the classic pivot doors, or the stylish quadrant doors, Zeba has you covered.

We take pride in the quality and durability of our products, and that's why the Zeba range comes with a Lifetime Warranty. With Zeba, you can rest assured knowing that your investment in your bathroom will stand the test of time.

Zeba combines timeless design, innovative features, and lasting quality. Elevate your bathroom design and immerse yourself in the graceful beauty of Zeba shower enclosures. Experience the new standard in shower enclosure excellence.

FOR SHOWER TRAYS See pages 288 - 297

CITY+
Shower Doors

The CITY+ collection is a vibrant range of enclosures created for modern lifestyles. Designed and manufactured with high quality components to meet exacting Standards, CITY+ from KRISTAL Shower Doors epitomises style and performance.

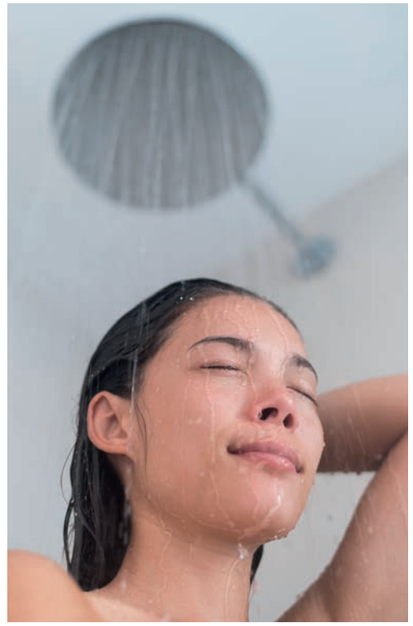

Chrome Handle

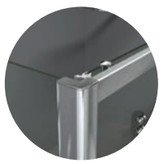

Polished Profiles

Inside Profile

Push Down rollers

1900 mm

6mm

LIFETIME WARRANTY

CLEAR SHIELD

FOR SHOWER TRAYS See pages 288 - 297

Sliding Doors

Sliding door enclosures are space saving in design and are available in a comprehensive range of styles and sizes. These doors can be used in recessed showers, or add a side panel to create a complete shower enclosure.

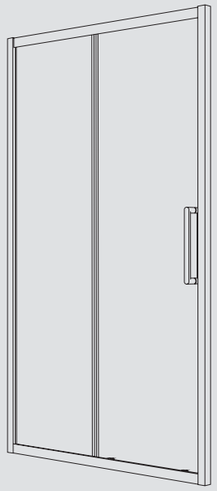

	ASPECT	ZEBA	CITY+
1000mm	●	●	●
1050mm			●
1100mm	●	●	●
1150mm			●
1200mm	●	●	●
1300mm	●		●
1400mm	●	●	●
1500mm	●		
1600mm	●		
1700mm	●		
1800mm	●		

ASPECT SLIDING DOORS

Chrome · Sliding Door with Side Panel

Matt Black · Sliding Door with Side Panel

Brushed Gold · Sliding Door with Side Panel

ASPECT Sliding Door

	Size	Adjustment Min - Max	Adjustment with side panel	Door Opening	Chrome		Matt Black		Brushed Gold	
	1000	955 - 995	960 - 995	378	USE00008	**£635**	USE00045	**£635**	USE00081	**£695**
	1100	1055 - 1095	1060 - 1095	428	USE00009	**£640**	USE00046	**£640**	USE00082	**£705**
	1200	1155 - 1195	1160 - 1195	478	USE00010	**£670**	USE00047	**£670**	USE00083	**£735**
	1300	1255 - 1295	1260 - 1295	528	USE00011	**£715**	USE00048	**£715**	USE00084	**£785**
	1400	1355 - 1395	1360 - 1395	578	USE00012	**£745**	USE00049	**£745**	USE00085	**£820**
NEW	1500	1455 - 1495	1464 - 1504	578	USE00154	**£795**	USE00119	**£795**	USE00156	**£875**
	1600	1555 - 1595	1560 - 1595	578	USE00033	**£850**	USE00069	**£850**	USE00105	**£935**
	1700	1655 - 1695	1660 - 1695	578	USE00034	**£870**	USE00070	**£870**	USE00106	**£955**
	1800	1755 - 1795	1760 - 1795	578	USE00035	**£900**	USE00071	**£900**	USE00107	**£990**

ASPECT Side Panel

Size	Adjustment Min - Max	Chrome		Matt Black		Brushed Gold	
700	665 - 685	USE00022	**£370**	USE00058	**£370**	USE00094	**£410**
760	725 - 745	USE00023	**£370**	USE00059	**£370**	USE00095	**£410**
800	765 - 785	USE00024	**£370**	USE00060	**£370**	USE00096	**£410**
900	865 - 885	USE00025	**£400**	USE00061	**£400**	USE00097	**£440**
1000	965 - 985	USE00026	**£440**	USE00062	**£440**	USE00098	**£485**

ASPECT 30mm Extension Profile

Chrome	USE00027	**£125**
Matt Black	USE00063	**£125**
Brushed Gold	USE00099	**£140**

ZEBA

SLIDING DOORS

ZEBA · Sliding Door With Side Panel

ZEBA · Sliding Door In Recess

ZEBA Sliding Doors

Size	Adjustment Min - Max	Adjustment with side panel	Door Opening	Code	Price
1000	950 - 990	950 - 990	386	USE00125	**£560**
1100	1050 - 1090	1050 - 1090	436	USE00126	**£575**
1200	1150 - 1190	1150 - 1190	486	USE00127	**£595**
1400	1350 - 1390	1350 - 1390	586	USE00128	**£665**

ZEBA Side Panel

Size	Adjustment Min - Max	Code	Price
700	670 - 690	USE00133	**£320**
800	770 - 790	USE00134	**£320**
900	870 - 890	USE00135	**£335**
1000	970 - 990	USE00136	**£365**

FOR SHOWER TRAYS See pages 288 - 297

ZEBA 30mm Extension Profile

USE00168 **£110**

1950 mm · 6mm · LIFETIME WARRANTY · CLEAR SHIELD

CITY+

SLIDING DOORS

CITY+ · Sliding Door With Side Panel

CITY+ · Sliding Door In Recess

CITY+ Sliding Doors

Size	Adjustment Min - Max	Adjustment with side panel	Door Opening	Code	Price
1000	940 - 990	945 - 990	373	CTP008	**£480**
1050	990 - 1040	995 - 1045	398	USE00111	**£495**
1100	1040 - 1090	1045 - 1090	423	CTP009	**£505**
1150	1090 - 1140	1095 - 1145	448	USE00112	**£520**
1200	1140 - 1190	1145 - 1190	473	CTP010	**£530**
1300	1240 - 1290	1245 - 1290	523	CTP011	**£580**
1400	1340 - 1390	1345 - 1390	573	CTP012	**£590**

CITY+ Side Panel

Size	Adjustment Min - Max	Code	Price
700	665 - 690	CTP016	**£265**
760	725 - 750	CTP017	**£265**
800	765 - 790	CTP018	**£265**
900	865 - 890	CTP019	**£265**
1000	965 - 990	CTP020	**£295**

FOR SHOWER TRAYS See pages 288 - 297

CITY+ 20mm Extension Profile

CTP035 **£95**

1900 mm · 6mm · LIFETIME WARRANTY · CLEAR SHIELD

Bifold & Infold Doors

Featuring an inward opening mechanism, bifold & infold doors are an excellent option for compact bathrooms. This innovative design serves as a perfect space - saving solution, especially in smaller bathrooms where a forward - opening door could potentially obstruct fixtures located outside the enclosure.

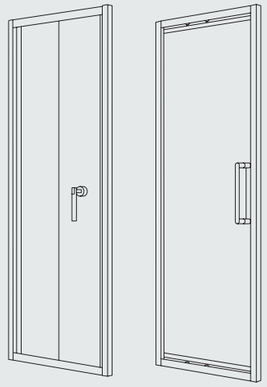

Bifold Infold

	ASPECT	ZEBA	CITY+
	Infold	Bifold	Bifold
700mm	●		●
760mm	●		●
800mm	●	●	●
850mm			●
900mm	●	●	●
950mm			●
1000mm			●

ASPECT INFOLD DOORS

NEW

Infold Door in Recess

Infold Door with Side Panel

ASPECT Infold Doors

Size	Adjustment Min - Max	Adjustment with side panel	Door Opening	Chrome	Matt Black	Brushed Gold
700	655 - 695	664 - 704	484	USE00155 **£560**	USE00160 **£560**	USE00164 **£615**
760	715 - 755	724 - 764	541	USE00157 **£580**	USE00161 **£580**	USE00165 **£635**
800	755 - 795	764 - 804	579	USE00158 **£590**	USE00162 **£590**	USE00166 **£650**
900	855 - 895	864 - 904	674	USE00159 **£610**	USE00163 **£610**	USE00167 **£670**

ASPECT Side Panel

Size	Adjustment Min - Max	Chrome		Matt Black		Brushed Gold	
700	665 - 685	USE00022	**£370**	USE00058	**£370**	USE00094	**£410**
760	725 - 745	USE00023	**£370**	USE00059	**£370**	USE00095	**£410**
800	765 - 785	USE00024	**£370**	USE00060	**£370**	USE00096	**£410**
900	865 - 885	USE00025	**£400**	USE00061	**£400**	USE00097	**£440**
1000	965 - 985	USE00026	**£440**	USE00062	**£440**	USE00098	**£485**

ASPECT 30mm Extension Profile

Chrome	USE00027	**£125**
Matt Black	USE00063	**£125**
Brushed Gold	USE00099	**£140**

FOR SHOWER TRAYS

See pages 288 - 297

ZEBA

BIFOLD DOORS

ZEBA · Bifold Door with Side Panel

ZEBA ·Bifold Door in Recess

ZEBA Bifold Doors

Size	Adjustment Min - Max	Adjustment with side panel	Door Opening	Code	Price
800	750 - 790	750 - 790	507	USE00129	**£505**
900	850 - 890	850 - 890	607	USE00130	**£530**

ZEBA Side Panel

Size	Adjustment Min - Max	Code	Price
700	670 - 690	USE00133	**£320**
800	770 - 790	USE00134	**£320**
900	870 - 890	USE00135	**£335**
1000	970 - 990	USE00136	**£365**

ZEBA 30mm Extension Profile

USE00168 **£110**

FOR SHOWER TRAYS See pages 288 - 297

1950 mm · 6mm · LIFETIME WARRANTY · CLEAR SHIELD

CITY+

BIFOLD DOORS

CITY+ · Bifold Door with Side Panel

CITY+ · Bifold Door in Recess

CITY+ Bifold Doors

Size	Adjustment Min - Max	Adjustment with side panel	Door Opening	Code	Price
700	650 - 700	655 - 700	405	CTP021	**£440**
760	710 - 760	715 - 760	460	CTP022	**£440**
800	740 - 790	745 - 790	483	CTP023	**£440**
850	790 - 840	795 - 845	530	USE00115	**£460**
900	840 - 890	845 - 890	565	CTP024	**£470**
950	890 - 940	895 - 945	615	USE00116	**£495**
1000	940 - 990	945 - 990	648	CTP025	**£530**

CITY+ Side Panel

Size	Adjustment Min - Max	Code	Price
700	665 - 690	CTP016	**£265**
760	725 - 750	CTP017	**£265**
800	765 - 790	CTP018	**£265**
900	865 - 890	CTP019	**£265**
1000	965 - 990	CTP020	**£295**

CITY+ 20mm Extension Profile

CTP035 **£95**

FOR SHOWER TRAYS See pages 288 - 297

1900 mm · 6mm · LIFETIME WARRANTY · CLEAR SHIELD

Quadrant Doors

With a curved front profile, quadrant enclosures offer a generous showering experience, while allowing for additional floor space within the bathroom.

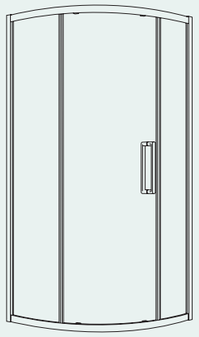

Single Door

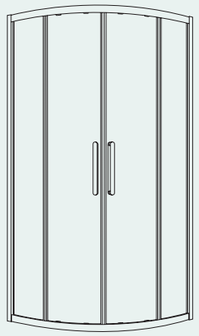

Two Door

	ASPECT	ZEBA	CITY+
Single Door Quadrant			
800mm		•	•
900mm	•	•	•
1000mm	•		•
Two Door Quadrant			
800mm			•
900mm	•		•
1000mm			•

ASPECT

QUADRANT DOORS

Aspect · Two Door Quadrant · Chrome

Aspect · Single Door Quadrant · Brushed Gold

ASPECT Single Door Quadrant

Size	Adjustment Min - Max	Door Opening	Chrome	Matt Black	Brushed Gold
900	865 - 885	430	USE00028 **£920**	USE00064 **£920**	USE00100 **£1015**
1000	965 - 985	430	USE00029 **£955**	USE00065 **£955**	USE00101 **£1050**

ASPECT Two Door Quadrant

Size	Adjustment Min - Max	Door Opening	Chrome	Matt Black	Brushed Gold
900	865 - 885	524	USE00001 **£770**	USE00039 **£770**	USE00075 **£850**

ASPECT 30mm Extension Profile

Chrome	USE00027	**£125**
Matt Black	USE00063	**£125**
Brushed Gold	USE00099	**£140**

FOR SHOWER TRAYS

See pages 288 - 297

ZEBA

QUADRANT DOORS

ZEBA · Single Door Quadrant

ZEBA Single Door Quadrant

Size	Adjustment Min - Max	Door Opening	Code	Price
800	770 - 790	420	USE00120	**£635**
900	870 - 890	472	USE00121	**£650**

ZEBA 30mm Extension Profile

USE00168 **£110**

FOR SHOWER TRAYS See pages 288 - 297

1950 mm · 6mm · LIFETIME WARRANTY · CLEAR SHIELD

CITY+

QUADRANT DOORS

CITY+ · Two Door Quadrant

CITY+ · Single Door Quadrant

CITY+ Single Door Quadrant

Size	Adjustment Min - Max	Door Opening	Code	Price
800	765 - 790	406	CTP029	**£580**
900	865 - 890	458	CTP030	**£580**
1000	965 - 990	458	CTP034	**£685**

CITY+ Two Door Quadrant

Size	Adjustment Min - Max	Door Opening	Code	Price
800	765 - 790	411	CTP001	**£530**
900	865 - 890	539	CTP002	**£530**
1000	965 - 990	539	CTP003	**£590**

CITY+ 20mm Extension Profile

CTP035 **£95**

FOR SHOWER TRAYS See pages 288 - 297

1900 mm · 6mm · LIFETIME WARRANTY · CLEAR SHIELD

Offset Quadrant Doors

Boasting the same benefits as a quadrant enclosure, the offset enclosures have one side of the tray longer than the other, thereby creating the offset configuration. This allows for more room when showering, while still fitting neatly into the bathroom layout.

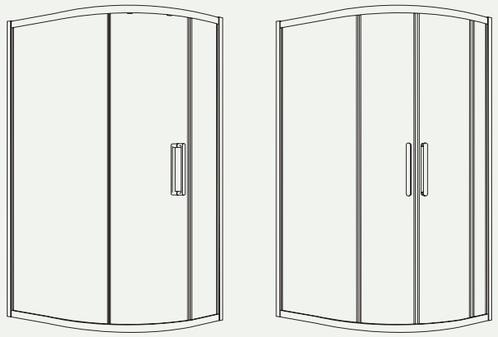

Single Door | Two Door

	ASPECT	ZEBA	CITY+
Single Door Offset Quadrant			
1000 x 800mm	●	●	●
1200 x 800mm	●	●	●
1200 x 900mm	●	●	●
Two Door Offset Quadrant			
900 x 800mm			●
1000 x 800mm			●
1200 x 800mm			●
1200 x 900mm			●

ASPECT

OFFSET QUADRANT DOORS

ASPECT Single Door Offset Quadrant

Size	Adjustment Min - Max — Min - Max	Door Opening	Chrome	Matt Black	Brushed Gold
1000 x 800	965 - 985 — 765 - 785	**430**	USE00030 **£955**	USE00066 **£955**	USE00102 **£1050**
1200 x 800	1165 - 1185 — 765 - 785	**430**	USE00031 **£995**	USE00067 **£995**	USE00103 **£1095**
1200 x 900	1165 - 1185 — 865 - 885	**430**	USE00032 **£995**	USE00068 **£995**	USE00104 **£1095**

FOR SHOWER TRAYS **See pages 288 - 297**

ASPECT 30mm Extension Profile

Chrome	USE00027	**£125**
Matt Black	USE00063	**£125**
Brushed Gold	USE00099	**£140**

ZEBA

OFFSET QUADRANT DOORS

ZEBA · Single Door Offset Quadrant

ZEBA Single Door Offset Quadrant

Size	Adjustment Min - Max — Min - Max	Door Opening	Code	Price
1000 x 800	970 - 990 — 770 - 790	420	USE00122	**£795**
1200 x 800	1170 - 1190 — 770 - 790	420	USE00123	**£850**
1200 x 900	1170 - 1190 — 870 - 890	472	USE00124	**£850**

ZEBA 30mm Extension Profile

USE00168 **£110**

FOR SHOWER TRAYS See pages 288 - 297

1950 mm · 6mm · LIFETIME WARRANTY · CLEAR SHIELD

CITY+

OFFSET QUADRANT DOORS

CITY+ · Single Door Offset Quadrant

CITY+ · Two Door Offset Quadrant

CITY+ Single Door Offset Quadrant

Size	Adjustment Min - Max — Min - Max	Door Opening	Code	
1000 x 800	965 - 990 — 765 - 790	406	CTP033	**£685**
1200 x 800	1165 - 1190 — 765 - 790	406	CTP032	**£715**
1200 x 900	1165 - 1190 — 865 - 890	458	CTP031	**£715**

CITY+ Two Door Offset Quadrant

Size	Adjustment Min - Max — Min - Max	Door Opening	Code	
900 x 800	865 - 890 — 765 - 790	481	CTP007	**£570**
1000 x 800	965 - 990 — 765 - 790	470	CTP004	**£580**
1200 x 800	1165 - 1190 — 765 - 790	470	CTP005	**£610**
1200 x 900	1165 - 1190 — 865 - 890	539	CTP006	**£610**

CITY+ 20mm Extension Profile

CTP035 **£95**

FOR SHOWER TRAYS See pages 288 - 297

1900 mm · 6mm · LIFETIME WARRANTY · CLEAR SHIELD

Hinged & Pivot Doors

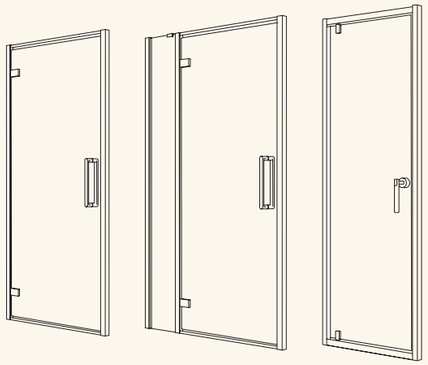

These enclosures are hinged on one side and open outwards, giving you ample space to access your shower. Suitable for use in a recess, or add a side panel to create a full enclosure.

Pivot shower enclosure doors open outwards, creating a spacious showering experience while making access to the shower easy. It's important to ensure there is sufficient space in front of the shower when the door pivots open.

	ASPECT		ZEBA	CITY+
	Hinged	Hinged & Inline	Pivot	Pivot
700mm	●			●
760mm	●			●
800mm	●		●	●
900mm	●		●	●
1000mm		●		●
1100mm		●		
1200mm		●		

ZEBA · Pivot Door with Side Panel

Aspect · Hinged Door · Matt Black

ASPECT Hinged Doors

Size	Adjustment Min - Max	Adjustment with side panel	Door Opening	Chrome	Matt Black	Brushed Gold
700	655 - 695	660 - 695	470	USE00017 **£560**	USE00053 **£560**	USE00089 **£615**
760	715 - 755	720 - 755	530	USE00018 **£580**	USE00054 **£580**	USE00090 **£635**
800	755 - 795	760 - 795	570	USE00019 **£590**	USE00055 **£590**	USE00091 **£650**
900	855 - 895	860 - 895	670	USE00020 **£610**	USE00056 **£610**	USE00092 **£670**

FOR SHOWER TRAYS

See pages 288 - 297

2000 mm · 8mm · LIFETIME WARRANTY · CLEAR SHIELD

Aspect · Hinged & Inline Door · Brushed Gold

ASPECT Hinged & Inline Doors

Size	Adjustment Min - Max	Adjustment with side panel	Door Opening	Chrome	Matt Black	Brushed Gold
1000	955 - 995	960 - 995	470	USE00036 **£795**	USE00072 **£795**	USE00108 **£875**
1100	1055 - 1095	1060 - 1095	570	USE00037 **£805**	USE00073 **£805**	USE00109 **£885**
1200	1155 - 1195	1160 - 1195	670	USE00038 **£815**	USE00074 **£815**	USE00110 **£895**

ASPECT Side Panel

Size	Adjustment Min - Max	Chrome		Matt Black		Brushed Gold	
700	665 - 685	USE00022	**£370**	USE00058	**£370**	USE00094	**£410**
760	725 - 745	USE00023	**£370**	USE00059	**£370**	USE00095	**£410**
800	765 - 785	USE00024	**£370**	USE00060	**£370**	USE00096	**£410**
900	865 - 885	USE00025	**£400**	USE00061	**£400**	USE00097	**£440**
1000	965 - 985	USE00026	**£440**	USE00062	**£440**	USE00098	**£485**

ASPECT 30mm Extension Profile

Chrome	USE00027	**£125**
Matt Black	USE00063	**£125**
Brushed Gold	USE00099	**£140**

ZEBA

PIVOT DOORS

ZEBA · Pivot Door with Side Panel

ZEBA · Pivot Door in Recess

ZEBA Pivot Door

Size	Adjustment Min - Max	Adjustment with side panel	Door Opening	Code	Price
800	750 - 790	750 - 790	577	USE00131	**£480**
900	850 - 890	850 - 890	677	USE00132	**£500**

ZEBA Side Panel

Size	Adjustment Min - Max	Code	Price
700	670 - 690	USE00133	**£320**
800	770 - 790	USE00134	**£320**
900	870 - 890	USE00135	**£335**
1000	970 - 990	USE00136	**£365**

ZEBA 30mm Extension Profile

USE00168 **£110**

FOR SHOWER TRAYS See pages 288 - 297

CITY+

PIVOT DOORS

CITY+ · Pivot Door with Side Panel

CITY+ · Pivot Door in Recess

CITY+ Pivot Door

Size	Adjustment Min - Max	Adjustment with side panel	Door Opening	Code	Price
700	640 - 690	645 - 695	467	USE00113	**£365**
760	710 - 760	715 - 760	537	CTP013	**£365**
800	740 - 790	745 - 790	567	CTP014	**£375**
900	840 - 890	845 - 890	667	CTP015	**£390**
1000	940 - 990	945 - 995	767	USE00114	**£445**

CITY+ Side Panel

Size	Adjustment Min - Max	Code	Price
700	665 - 690	CTP016	**£265**
760	725 - 750	CTP017	**£265**
800	765 - 790	CTP018	**£265**
900	865 - 890	CTP019	**£265**
1000	965 - 990	CTP020	**£295**

CITY+ 20mm Extension Profile

CTP035 **£95**

FOR SHOWER TRAYS See pages 288 - 297

Corner Entry Doors

Ideal for bathrooms with limited space, corner entry enclosures serve as excellent space savers. Neatly fitting into any size bathroom, they provide a multitude of advantages. With a range of options available, there's a perfect style and size to suit your bathroom.

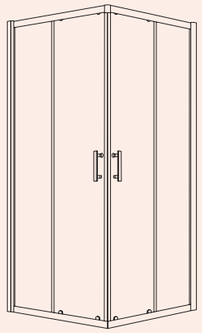

	ASPECT	ZEBA	CITY+
760mm			•
800mm			•
900mm			•

CITY+ · Corner Entry

CITY+ Corner Entry

Size	Adjustment Min - Max	Door Opening	Code	Price
760	725 - 750	364	CTP026	**£530**
800	765 - 790	392	CTP027	**£530**
900	865 - 890	463	CTP028	**£565**

FOR SHOWER TRAYS

See pages 288 - 297

CITY+ 20mm Extension Profile

CTP035 **£95**

Wetroom Panels

For those seeking a more open and contemporary showering experience, our wetroom panels are the ideal choice. These panels can be seamlessly installed onto a tiled floor or paired with any of our SONAS Bathrooms shower trays. Whether you're looking to modernize your space or create a spa- like atmosphere, our wetroom panels provide the flexibility and design options you need. Choose between fluted panels to add texture and elegance to your shower space, or go for the smooth, for a minimalist look. With the choice of clear or coloured glass, you have the creative freedom to craft a shower area that suits your individual taste.

	ASPECT	MIRAGE
Panel Height	2000 mm	2000 mm
Glass Thickness	8mm	8mm
Clear Shield	CLEAR SHIELD	CLEAR SHIELD
Warranty	LIFETIME WARRANTY	LIFETIME WARRANTY
Glass Finish	Clear	Clear, Fluted, Smoked
Profile Colours		
Flipper Panel	•	

MIRAGE · Matt Black · Smoked Glass

ASPECT · Chrome

ASPECT
Wetroom Panels

Create your own style with **ASPECT WETROOM** Panels, designed with functional simplicity to create a luxury showering experience for less.

A smart looking addition can utilise your space and work beautifully with a slim - line shower tray or directly onto your tiled wetroom floor.

Features

- Universally Handed
- Clear Shield - Easy Clean Glass Protection
- 20mm Adjustable Wall Profiles
- Power Shower Suitable
- 1200mm Overhead Support Bar
- Profile Cover Cap
- Flipper Panel Available

Sizes

- 300mm NEW
- 400mm NEW
- 500mm NEW
- 600mm NEW
- 700mm
- 800mm
- 900mm
- 1000mm
- 1100mm
- 1200mm
- 1400mm

Colours

Chrome

Matt Black

Black Trellis

Matt White

Brushed Gold

Brushed Nickel

2000 mm · 8mm · LIFETIME WARRANTY · CLEAR SHIELD

NEW Optional Support Bars

300mm Angled Support Bar

650mm Angled Support Bar

650mm Ceiling Support Bar

Optional 300mm Flipper Panel

Brushed Nickel

Brushed Gold

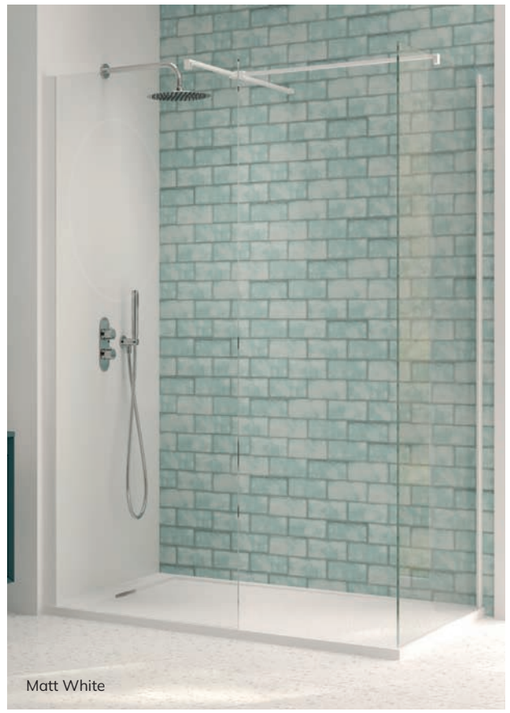
Matt White

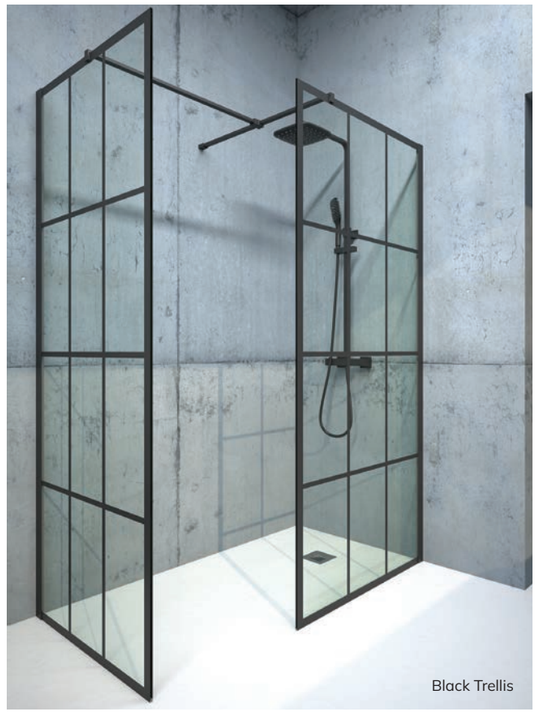
Black Trellis

ASPECT Chrome Wetroom Panels

Includes overhead support bar

Size	Adjustment Min - Max	Code	Price
300	270 - 290	UWP0104	**£325**
400	370 - 390	UWP0105	**£345**
500	470 - 490	UWP0106	**£365**
600	570 - 590	UWP0107	**£385**
700	670 - 690	AWRP0700CP	**£395**
800	770 - 790	AWRP0800CP	**£395**
900	870 - 890	AWRP0900CP	**£440**
1000	970 - 990	AWRP1000CP	**£450**
1100	1070 - 1090	AWRP1100CP	**£475**
1200	1170 - 1190	AWRP1200CP	**£500**
1400	1370 - 1390	AWRP1400CP	**£560**

ASPECT Matt Black Wetroom Panels

Includes overhead support bar

Size	Adjustment Min - Max	Code	Price
300	270 - 290	UWP0108	**£325**
400	370 - 390	UWP0109	**£345**
500	470 - 490	UWP0110	**£365**
600	570 - 590	UWP0111	**£385**
700	670 - 690	AWRP0700MB	**£395**
800	770 - 790	AWRP0800MB	**£395**
900	870 - 890	AWRP0900MB	**£440**
1000	970 - 990	AWRP1000MB	**£450**
1100	1070 - 1090	AWRP1100MB	**£475**
1200	1170 - 1190	AWRP1200MB	**£500**
1400	1370 - 1390	AWRP1400MB	**£560**

ASPECT Black Trellis Wetroom Panels

Includes overhead support bar

Size	Adjustment Min - Max	Code	Price
700	670 - 690	ABWRP008	**£460**
800	770 - 790	ABWRP009	**£460**
900	870 - 890	ABWRP010	**£495**
1000	970 - 990	ABWRP011	**£515**
1100	1070 - 1090	ABWRP012	**£540**
1200	1170 - 1190	ABWRP013	**£565**
1400	1370 - 1390	ABWRP014	**£625**

ASPECT Matt White Wetroom Panels

Includes overhead support bar

Size	Adjustment Min - Max	Code	Price
300	270 - 290	UWP0120	**£325**
400	370 - 390	UWP0121	**£345**
500	470 - 490	UWP0122	**£365**
600	570 - 590	UWP0123	**£385**
700	670 - 690	AWRP0700MW	**£395**
800	770 - 790	AWRP0800MW	**£395**
900	870 - 890	AWRP0900MW	**£440**
1000	970 - 990	AWRP1000MW	**£450**
1100	1070 - 1090	AWRP1100MW	**£475**
1200	1170 - 1190	AWRP1200MW	**£500**
1400	1370 - 1390	AWRP1400MW	**£560**

ASPECT Brushed Gold Wetroom Panels

Includes overhead support bar

Size	Adjustment Min - Max	Code	Price
300	270 - 290	UWP0112	**£525**
400	370 - 390	UWP0113	**£545**
500	470 - 490	UWP0114	**£565**
600	570 - 590	UWP0115	**£585**
700	670 - 690	AWRP0700BG	**£595**
800	770 - 790	AWRP0800BG	**£595**
900	870 - 890	AWRP0900BG	**£640**
1000	970 - 990	AWRP1000BG	**£640**
1100	1070 - 1090	AWRP1100BG	**£685**
1200	1170 - 1190	AWRP1200BG	**£715**
1400	1370 - 1390	AWRP1400BG	**£745**

ASPECT Brushed Nickel Wetroom Panels

Includes overhead support bar

Size	Adjustment Min - Max	Code	Price
300	270 - 290	UWP0116	**£525**
400	370 - 390	UWP0117	**£545**
500	470 - 490	UWP0118	**£565**
600	570 - 590	UWP0119	**£585**
700	670 - 690	AWRP0700BN	**£595**
800	770 - 790	AWRP0800BN	**£595**
900	870 - 890	AWRP0900BN	**£640**
1000	970 - 990	AWRP1000BN	**£640**
1100	1070 - 1090	AWRP1100BN	**£685**
1200	1170 - 1190	AWRP1200BN	**£715**
1400	1370 - 1390	AWRP1400BN	**£745**

300mm Flipper Panel

Chrome	ACWRFP	**£280**
Matt Black	ABWRFP	**£280**
Black Trellis	UWP0016	**£365**
Matt White	UWP0015	**£280**
Brushed Gold	UWP0013	**£365**
Brushed Nickel	UWP0014	**£365**

NEW **300mm** Angled Support Bar

Chrome	USESP0003	**£40**
Matt Black	USESP0018	**£40**
Matt White	USESP0037	**£40**
Brushed Gold	USESP0039	**£50**
Brushed Nickel	USESP0038	**£50**

NEW **650mm** Angled Support Bar

Chrome	USESP0046	**£40**
Matt Black	USESP0047	**£40**
Matt White	USESP0048	**£40**
Brushed Gold	USESP0049	**£50**
Brushed Nickel	USESP0050	**£50**

NEW **650mm** Ceiling Support Bar

Chrome	USESP0041	**£40**
Matt Black	USESP0042	**£40**
Matt White	USESP0043	**£40**
Brushed Gold	USESP0044	**£50**
Brushed Nickel	USESP0045	**£50**

Matt Black

NEW

ASPECT
Scandinavian Wetroom Panels

Reimagine a World of Colour with Aspect Scandinavian Wetroom Panels.

Introducing our latest innovation in bathroom design - a brand new range of Aspect Scandinavian Wetroom Panels that perfectly complements our Scandinavian-inspired bathroom vanity units. With colour-matching wall profiles, we aim to give consumers and designers the opportunity to create a harmonious and cohesive colour palette in their bathrooms.

Features

- Universally Handed
- Clear Shield - Easy Clean Glass Protection
- 20mm Adjustable Wall Profiles
- Power Shower Suitable
- 1200mm Overhead Support Bar
- Profile Cover Cap
- Flipper Panel Available

Sizes

- 300mm
- 400mm
- 500mm
- 600mm
- 700mm
- 800mm
- 900mm
- 1000mm
- 1100mm
- 1200mm
- 1400mm

Optional 300mm Flipper Panel

Colours

- Cashmere Pink Matt
- Morning Sky Blue Matt
- Ocean Blue Matt
- Night Sky Blue Matt
- Khaki Matt
- Coral Green Matt
- Wreath Green Matt
- Arctic Grey Matt
- Midnight Grey Matt

Ocean Blue Matt

NEW **ASPECT** Scandinavian Colour Coordinating Wetroom Panel

Includes overhead support bar

Size mm	Adjustment Min - Max	Cashmere Pink Matt	Morning Sky Blue Matt	Ocean Blue Matt	Night Sky Blue Matt	Khaki Matt	Coral Green Matt	Wreath Green Matt	Arctic Grey Matt	Midnight Grey Matt	Price
300	**270 - 290**	UWP0124	UWP0128	UWP0132	UWP0136	UWP0140	UWP0144	UWP0148	UWP0152	UWP0156	**£425**
400	**370 - 390**	UWP0125	UWP0129	UWP0133	UWP0137	UWP0141	UWP0145	UWP0149	UWP0153	UWP0157	**£445**
500	**470 - 490**	UWP0126	UWP0130	UWP0134	UWP0138	UWP0142	UWP0146	UWP0150	UWP0154	UWP0158	**£465**
600	**570 - 590**	UWP0127	UWP0131	UWP0135	UWP0139	UWP0143	UWP0147	UWP0151	UWP0155	UWP0159	**£485**
700	**670 - 690**	UWP0062	UWP0069	UWP0076	UWP0083	UWP0055	UWP0090	UWP0097	UWP0048	UWP0041	**£495**
800	**770 - 790**	UWP0063	UWP0070	UWP0077	UWP0084	UWP0056	UWP0091	UWP0098	UWP0049	UWP0042	**£495**
900	**870 - 890**	UWP0064	UWP0071	UWP0078	UWP0085	UWP0057	UWP0092	UWP0099	UWP0050	UWP0043	**£540**
1000	**970 - 990**	UWP0065	UWP0072	UWP0079	UWP0086	UWP0058	UWP0093	UWP0100	UWP0051	UWP0044	**£545**
1100	**1070 - 1090**	UWP0066	UWP0073	UWP0080	UWP0087	UWP0059	UWP0094	UWP0101	UWP0052	UWP0045	**£580**
1200	**1170 - 1190**	UWP0067	UWP0074	UWP0081	UWP0088	UWP0060	UWP0095	UWP0102	UWP0053	UWP0046	**£615**
1400	**1370 - 1390**	UWP0068	UWP0075	UWP0082	UWP0089	UWP0061	UWP0096	UWP0103	UWP0054	UWP0047	**£650**

NEW **300mm** Scandinavian Colour Coordinating Flipper Panel

£345

Cashmere Pink Matt	UWP0035
Morning Sky Blue Matt	UWP0036
Ocean Blue Matt	UWP0037
Night Sky Blue Matt	UWP0038
Khaki Matt	UWP0034
Coral Green Matt	UWP0039
Wreath Green Matt	UWP0040
Arctic Grey Matt	UWP0033
Midnight Grey Matt	UWP0032

FOR SHOWER TRAYS **See pages 288 - 297**

Cashmere Pink Matt

Morning Sky Blue Matt

NEW RANGE

MIRAGE Wetroom Panels

Elevate your bathroom to new heights with our MIRAGE Wetroom Panels - A symphony of style and functionality that will redefine your showering experience. Available in Fluted, Smoked, and Clear Glass, this collection provides a variety of design choices to suit your taste.

Standing tall at 2 metres, our minimal framed panels offer both aesthetic finesse and structural robustness.

With a stabilising bar and ceiling support option included, Mirage gives you the freedom to design your shower space just the way you envision it. You can further personalise your installation with the optional angle support bar.

Discover the perfect fusion of form and function with our MIRAGE Wetroom Panels. Reimagine your bathroom with elegance, versatility, and endless design possibilities.

Your dream shower space awaits.

Features

- Universally handed
- 20mm Minimal Frame
- 2000mm height
- 8mm Glass
- Clear shield easy clean Glass protection
- 10mm adjustable wall panels
- 1200mm support bar
- Ceiling support included
- Optional Angled support bar
- Profile cover cap

Sizes

- 900mm
- 1000mm
- 1200mm

Frames

Matt Black

Brushed Gold

Glass

Clear

Fluted

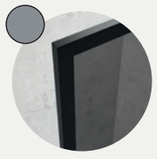

Smoked

Support Bars

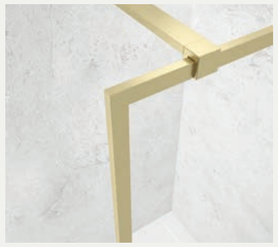

Stabilising Bar

Ceiling Support Bar

Optional Angled Support Bar

650mm Angled Support Bar

NEW RANGE

Matt Black · Smoked Glass

Brushed Gold · Clear Glass

NEW RANGE

Matt Black · Fluted Glass

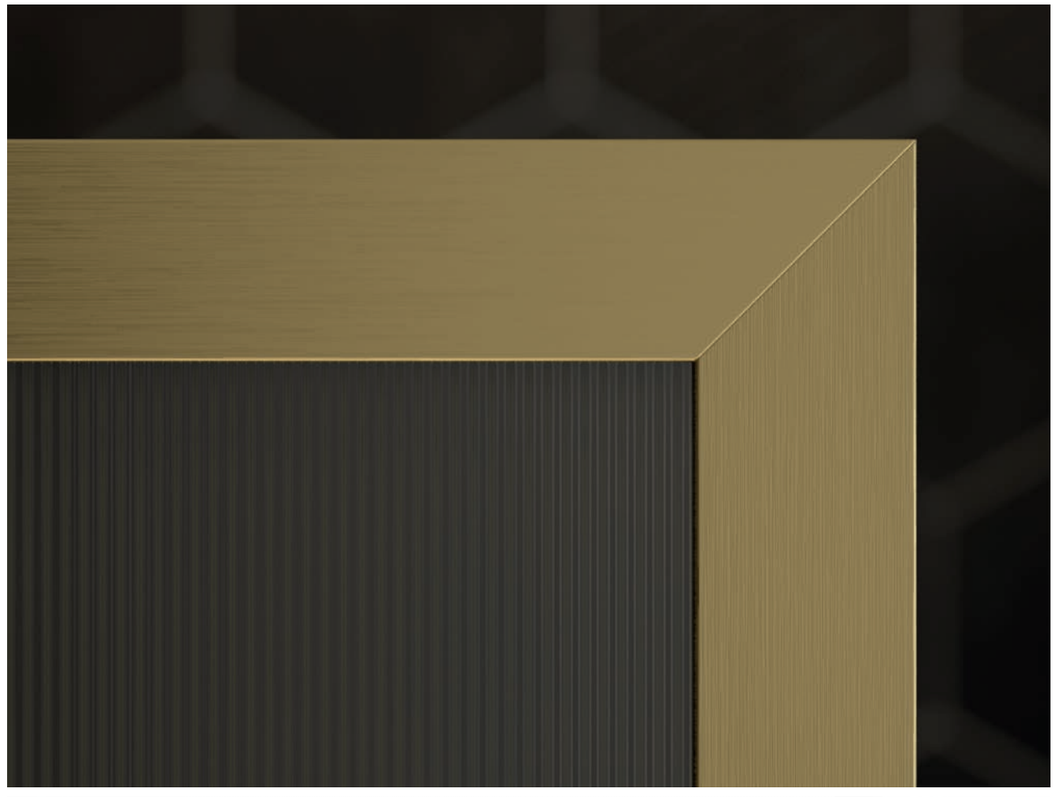

Matt Black · Clear Glass

MIRAGE Wetroom Panels

900mm Panel	**Clear Glass**	**Fluted Glass**	**Smoked Glass**
Matt Black	USE00146	USE00140	USE00143
Brushed Gold	USE00149	USE00137	—
	£695	**£745**	**£745**

1000mm Panel	**Clear Glass**	**Fluted Glass**	**Smoked Glass**
Matt Black	USE00147	USE00141	USE00144
Brushed Gold	USE00150	USE00138	—
	£725	**£775**	**£775**

1200mm Panel	**Clear Glass**	**Fluted Glass**	**Smoked Glass**
Matt Black	USE00148	USE00142	USE00145
Brushed Gold	USE00151	USE00139	—
	£750	**£795**	**£795**

650mm Angled Support Bar **£50**

Matt Black	USE00153
Brushed Gold	USE00152

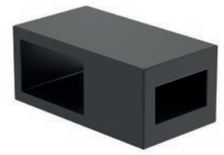

T Piece Joiner for Support Bar **£30**

Matt Black	UWPSP00001
Brushed Gold	UWPSP00002

FOR SHOWER TRAYS **See pages 288 - 297**

SHOWER TRAYS

Welcome to our exceptional shower tray collection, where stunning design meets unrivalled functionality. Our shower trays feature textured finishes, including slate trays with a wide array of colour options, adding a touch of elegance and style to your bathroom. With built-in slip-resistant properties, safety is never compromised.

Crafted with utmost durability and quality, our shower trays are built to withstand the test of time. From compact square trays to spacious rectangular options, our collection offers a variety of shapes and sizes to suit any bathroom design and layout. Elevate your shower experience with our exquisite range of shower trays, where superior design and practicality converge.

Shower Tray Guide

Slate

Slate trays are the ultimate in luxury and style. Available in a range of shapes and sizes, they add texture and colour to your shower. Featuring a slip resistant, ultra-thin, 30mm low profile for a smooth finish.

See 292 - 295

Low Profile Acrylic

Finished with a high quality, smooth white acrylic which is stylish and contemporary, comfortable to use and easy to clean. Available in an extensive range of shapes and sizes, with selected options available with integral tiling upstands.

See Page 296

Ultracast

Available in standard flat top and standard 4 upstand designs, the Ultracast shower tray combines high quality and style. Ultracast trays can come treated in an Anti-Slip coating, allowing a safer, calmer and more confident shower experience.

See Page 297

Anti-slip

For added safety and peace of mind, our range of acrylic capped Low Profile and Ultracast trays are available to buy with an Anti-Slip protection applied. If choosing this option, please allow for an approximate delivery time of 4 weeks.

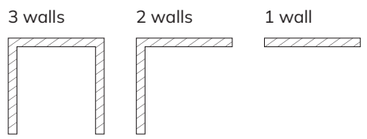

Your Space

Choose the right shower tray by planning ahead. Consider the footprint size you can allow for the tray, and which shape works best for your room.

We have options including square, rectangle and quadrant trays. Your tray may be installed in a recessed or flat to floor application. Choose from a host of styles including ultra-low-profile Slate, acrylic capped low-profile, or the Ultracast range.

Need any help? Just ask us.

TRAY SHAPES

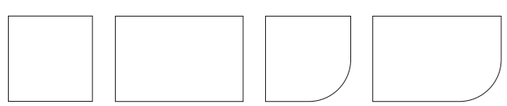

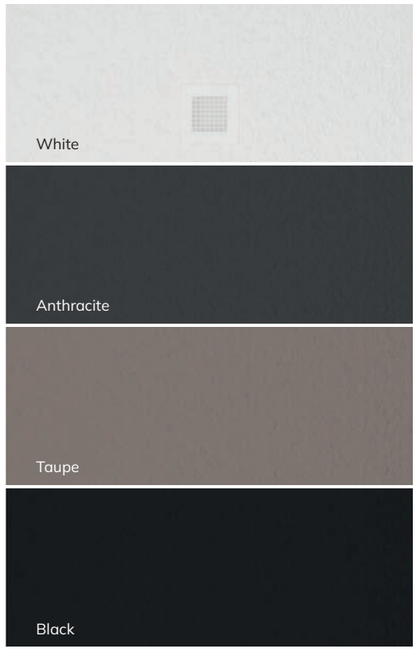

SLATE
Shower Trays

All our SLATE shower trays are made based on the latest material technologies, a combination of resins, gel coat and mineral stone. They are very strong against impact, comparable in this respect to natural stone. It is a product of solid core, strong and stiff, thereby preventing breakage.

- Resin Bonded
- Slip Resistant
- 30mm High

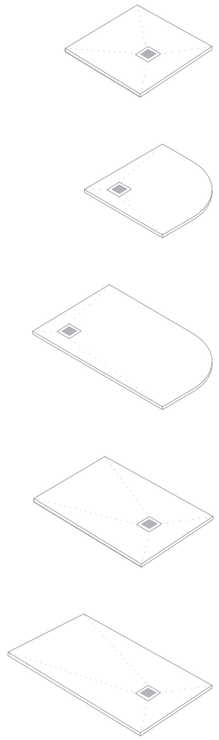

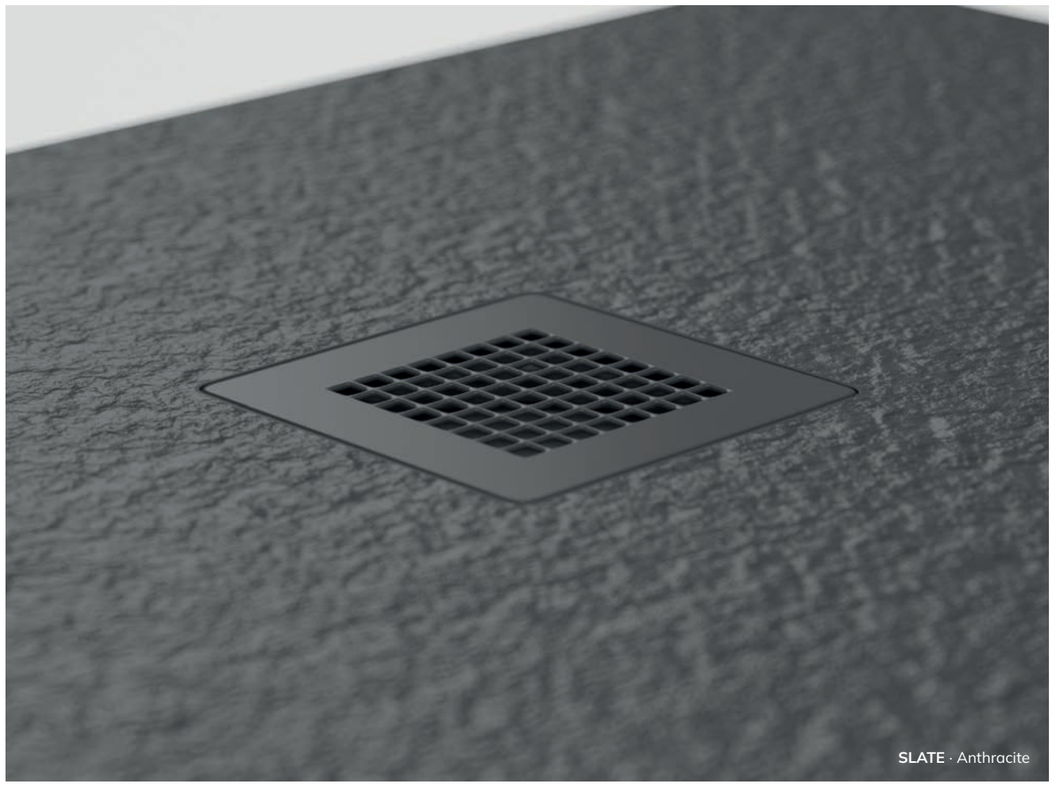

SLATE · Anthracite

SLATE · White · Large Rectangle

SLATE · Black · Quadrant

SLATE · Taupe · Offset Quadrant

SLATE · Anthracite Square

	Width (mm)	Length (mm)	White	Anthracite	Taupe	Black	Price
SLATE Square							
	800	800	NSL80WH	NSL80AT	NSL80TP	NSL80BLK	**£515**
	900	900	NSL90WH	NSL90AT	NSL90TP	NSL90BLK	**£515**
SLATE Quadrant *(Radius 550mm)*							
	900	900	NSLQ90WH	NSLQ90AT	NSLQ90TP	NSLQ90BLK	**£540**
	1000	1000	NSLQ100WH	NSLQ100AT	NSLQ100TP	NSLQ100BLK	**£640**
SLATE Offset Quadrant *(Radius 550mm) Offset quadrant shower trays are available in left or right hand, left hand shown here*							
	800	1000 L	NSLQ1080LHWH	NSLQ1080LHAT	NSLQ1080LHTP	NSLQ1080LHBLK	**£575**
		1000 R	NSLQ1080RHWH	NSLQ1080RHAT	NSLQ1080RHTP	NSLQ1080RHBLK	**£575**
		1200 L	NSLQ1280LHWH	NSLQ1280LHAT	NSLQ1280LHTP	NSLQ1280LHBLK	**£590**
		1200 R	NSLQ1280RHWH	NSLQ1280RHAT	NSLQ1280RHTP	NSLQ1280RHBLK	**£590**
	900	1200 L	NSLQ1290LHWH	NSLQ1290LHAT	NSLQ1290LHTP	NSLQ1290LHBLK	**£650**
		1200 R	NSLQ1290RHWH	NSLQ1290RHAT	NSLQ1290RHTP	NSLQ1290RHBLK	**£650**
SLATE Rectangular							
	800	900	NSL9080WH	NSL9080AT	NSL9080TP	NSL9080BLK	**£575**
		1000	NSL1080WH	NSL1080AT	NSL1080TP	NSL1080BLK	**£555**
		1200	NSL1280WH	NSL1280AT	NSL1280TP	NSL1280BLK	**£575**
	900	1000	NSL1090WH	NSL1090AT	NSL1090TP	NSL1090BLK	**£575**
		1200	NSL1290WH	NSL1290AT	NSL1290TP	NSL1290BLK	**£615**
SLATE Large Rectangular							
	700	1700	NSL1770WH	NSL1770AT	NSL1770TP	NSL1770BLK	**£780**
		1800	NSL1870WH	NSL1870AT	NSL1870TP	NSL1870BLK	**£795**
	800	1400	NSL1480WH	NSL1480AT	NSL1480TP	NSL1480BLK	**£625**
		1500	NSL1580WH	NSL1580AT	NSL1580TP	NSL1580BLK	**£685**
		1600	NSL1680WH	NSL1680AT	NSL1680TP	NSL1680BLK	**£715**
		1700	NSL1780WH	NSL1780AT	NSL1780TP	NSL1780BLK	**£785**
		1800	NSL1880WH	NSL1880AT	NSL1880TP	NSL1880BLK	**£785**
		1900	NSL1980WH	NSL1980AT	NSL1980TP	NSL1980BLK	**£885**
		2000	NSL2080WH	NSL2080AT	NSL2080TP	NSL2080BLK	**£910**
	900	1400	NSL1490WH	NSL1490AT	NSL1490TP	NSL1490BLK	**£685**
		1500	NSL1590WH	NSL1590AT	NSL1590TP	NSL1590BLK	**£760**
		1600	NSL1690WH	NSL1690AT	NSL1690TP	NSL1690BLK	**£785**
		1700	NSL1790WH	NSL1790AT	NSL1790TP	NSL1790BLK	**£860**
		1800	NSL1890WH	NSL1890AT	NSL1890TP	NSL1890BLK	**£885**
		1900	NSL1990WH	NSL1990AT	NSL1990TP	NSL1990BLK	**£935**
		2000	NSL2090WH	NSL2090AT	NSL2090TP	NSL2090BLK	**£950**

KRISTAL LOW PROFILE

25 YEAR WARRANTY

Available with Anti-Slip
Please allow approx
4 week delivery

	Code Standard	Price	Code Anti-slip	Price with Anti-slip	Code Upstand	Price with Upstand	Code Upstand with Anti-slip	Price Upstand with Anti-slip	
KRISTAL Low Profile Quadrant									
800 Q 550R	KLP80Q100	**£245**	KLP80Q100AS	**£405**	KLP80QUPS	**£300**	KLP80QUPSAS	**£445**	
900 Q 550R	KLP90Q100	**£245**	KLP90Q100AS	**£405**	KLP90QUPS	**£300**	KLP90QUPSAS	**£445**	
1000 Q 550R	KLP100Q100	**£360**	KLP100Q100AS	**£525**	—	—	—	—	
KRISTAL Low Profile Offset Quadrant			Offset quadrant shower trays are available in left or right hand, left hand shown here						
1000 x 800 LH	KLP1080LQ100	**£300**	KLP1080LQ100AS	**£500**	—	—	—	—	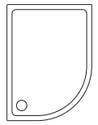
1000 x 800 RH	KLP1080RQ100	**£300**	KLP1080RQ100AS	**£500**	—	—	—	—	
1200 x 800 LH	KLP1280LQ100	**£300**	KLP1280LQ100AS	**£500**	—	—	—	—	
1200 x 800 RH	KLP1280RQ100	**£300**	KLP1280RQ100AS	**£500**	—	—	—	—	
1200 x 900 LH	KLP1290LQ100	**£300**	KLP1290LQ100AS	**£500**	—	—	—	—	
1200 x 900 RH	KLP1290RQ100	**£300**	KLP1290RQ100AS	**£500**	—	—	—	—	
KRISTAL Low Profile Square									
700 x 700	KLP70100	**£185**	KLP70100AS	**£300**	KLP70UPS	**£250**	KLP70UPSAS	**£390**	
760 x 760	KLP76100	**£185**	KLP76100AS	**£300**	KLP76UPS	**£250**	KLP76UPSAS	**£390**	
800 x 800	KLP80100	**£185**	KLP80100AS	**£300**	KLP80UPS	**£250**	KLP80UPSAS	**£390**	
900 x 900	KLP90100	**£250**	KLP90100AS	**£390**	KLP90UPS	**£360**	KLP90UPSAS	**£520**	
1000 x 1000	KLP100100	**£360**	KLP100100AS	**£525**	—	—	—	—	
KRISTAL Low Profile Rectangle									
800 x 700	KLP870100	**£295**	KLP870100AS	**£495**	KLP870UPS	**£430**	KLP870UPSAS	**£630**	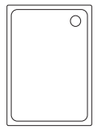
900 x 700	KLP970100	**£250**	KLP970100AS	**£445**	KLP970UPS	**£395**	KLP970UPSAS	**£585**	
900 x 760	KLP976100	**£250**	KLP976100AS	**£445**	KLP976UPS	**£395**	KLP976UPSAS	**£585**	
900 x 800	KLP980100	**£250**	KLP980100AS	**£445**	KLP980UPS	**£395**	KLP980UPSAS	**£585**	
1000 x 700	KLP1070100	**£275**	KLP1070100AS	**£470**	KLP1070UPS	**£410**	KLP1070UPSAS	**£620**	
1000 x 760	KLP1076100	**£275**	KLP1076100AS	**£470**	—	—	—	—	
1000 x 800	KLP1080100	**£275**	KLP1080100AS	**£470**	LP1080UPS	**£410**	KLP1080UPSAS	**£620**	
1000 x 900	KLP1090100	**£275**	KLP1090100AS	**£470**	KLP1090UPS	**£410**	KLP1090UPSAS	**£620**	
1100 x 760	KLP1176100	**£300**	KLP1176100AS	**£500**	—	—	—	—	
1100 x 800	KLP1180100	**£300**	KLP1180100AS	**£500**	—	—	—	—	
1100 x 900	KLP1190100	**£300**	KLP1190100AS	**£500**	—	—	—	—	
1200 x 700	KLP1270100	**£300**	KLP1270100AS	**£500**	—	—	—	—	
1200 x 760	KLP1276100	**£300**	KLP1276100AS	**£500**	KLP1276UPS	**£445**	KLP1276UPSAS	**£635**	
1200 x 800	KLP1280100	**£300**	KLP1280100AS	**£500**	KLP1280UPS	**£445**	KLP1280UPSAS	**£635**	
1200 x 900	KLP1290100	**£300**	KLP1290100AS	**£500**	KLP1290UPS	**£445**	KLP1290UPSAS	**£635**	
KRISTAL Low Profile LARGE Rectangle									
1300 x 800	KLP1380100	**£580**	KLP1380100AS	**£790**	—	—	—	—	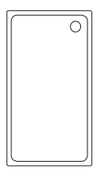
1400 x 700	KLP1470100	**£580**	KLP1470100AS	**£790**	—	—	—	—	
1400 x 800	KLP1480100	**£580**	KLP1480100AS	**£790**	KLP1480UPS	**£730**	KLP1480UPSAS	**£920**	
1400 x 900	KLP1490100	**£580**	KLP1490100AS	**£790**	KLP1490UPS	**£730**	KLP1490UPSAS	**£920**	
1500 x 700	KLP1570100	**£580**	KLP1570100AS	**£790**	KLP1570UPS	**£730**	KLP1570UPSAS	**£920**	
1500 x 760	KLP1576100	**£580**	KLP1576100AS	**£790**	—	—	—	—	
1500 x 800	KLP1580100	**£580**	KLP1580100AS	**£790**	—	—	—	—	
1500 x 900	KLP1590100	**£580**	KLP1590100AS	**£790**	KLP1590UPS	**£730**	KLP1590UPSAS	**£920**	
1600 x 700	KLP1670100	**£650**	KLP1670100AS	**£850**	KLP1670UPS	**£810**	KLP1670UPSAS	**£1005**	
1600 x 760	KLP1676100	**£650**	KLP1676100AS	**£850**	—	—	—	—	
1600 x 800	KLP1680100	**£650**	KLP1680100AS	**£850**	KLP1680UPS	**£810**	KLP1680UPSAS	**£1005**	
1600 x 900	KLP1690100	**£650**	KLP1690100AS	**£850**	KLP1690UPS	**£810**	KLP1690UPSAS	**£1005**	
1700 x 700	KLP1770100	**£830**	KLP1770100AS	**£1015**	—	—	—	—	
1700 x 760	KLP1776100	**£830**	KLP1776100AS	**£1015**	—	—	—	—	
1700 x 800	KLP1780100	**£830**	KLP1780100AS	**£1015**	—	—	—	—	
1700 x 900	KLP1790100	**£830**	KLP1790100AS	**£1015**	KLP1790UPS	**£960**	KLP1790100AS	**£1060**	

JTULTRACAST® Simple elegance

25 YEAR WARRANTY

Available with Anti-Slip
Please allow approx
4 week delivery

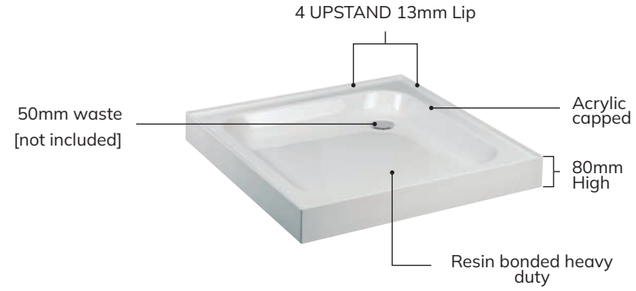

STANDARD **FLAT TOP**
The ULTRA CAST™ acrylic capped shower tray combines all the style and quality expected from the industry leader providing pleasure for years to come. Our contemporary design and beautiful finish enhances any bathroom environment. Manufactured to the highest specifications the ULTRA CAST™ acrylic capped resin bonded shower tray really is the perfect solution.

STANDARD **4 UPSTAND**
The concept behind tiling upstands was developed to improve shower tray installation, maximise sealing benefits and minimise installation costs. The ULTRA CAST™ Upstand shower tray has an integral tiling upstand which can be installed flush to the wall on one side allowing the shower cubicle tiling to simply overlap the upstand on the other side - simple but highly effective and especially suitable for new installations and building modernisation applications.

	Size	Code Standard	Price	Code Anti-slip	Price with Anti-slip	Code Upstand	Price with Upstand	Code Upstand with Anti-slip	Price Upstand with Anti-slip
JT ULTRACAST Quadrant									
	800	HSPA80Q100	**£250**	A80Q100AS*	**£405**	—	—	—	—
	900	HSPA90Q100	**£250**	A90Q100AS*	**£405**	—	—	—	—
	800 Q 550R	—	—	—	—	HSPA80Q120	**£250**	A80Q2AS*	**£405**
	900 Q 550R	—	—	—	—	HSPA90Q120	**£250**	A90Q2AS*	**£405**
	1000 Q 550R	—	—	—	—	HSPA100Q120*	**£320**	A100Q2AS*	**£480**
JT ULTRACAST Offset Quadrant				Offset quadrant shower trays are available in left or right hand, left hand shown here					
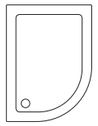	900 x 800 LH	HSPA980LQ100	**£315**	A980LQ2AS	**£515**	—	—	—	—
	900 x 800 RH	HSPA980RQ100	**£315**	A980RQ2AS	**£515**	—	—	—	—
	1000 x 800 LH	HSPA1080LQ100*	**£315**	A1080LQ2AS*	**£515**	—	—	—	—
	1000 x 800 RH	HSPA1080RQ100*	**£315**	A1080RQ2AS*	**£515**	—	—	—	—
	1200 x 900 LH	HSPA1290LQ100*	**£385**	A1290LQ2AS*	**£580**	—	—	—	—
	1200 x 900 RH	HSPA1290RQ100*	**£385**	A1290RQ2AS*	**£580**	—	—	—	—
JT ULTRACAST Square									
	700 x 700	HSPA70100	**£140**	A70AS*	**£255**	HSPA70140	**£245**	A704AS*	**£370**
	760 x 760	HSPA76100	**£140**	A76AS*	**£255**	HSPA76140	**£245**	A764AS*	**£370**
	800 x 800	HSPA80100	**£140**	A80AS*	**£255**	HSPA80140	**£245**	A804AS*	**£370**
	900 x 900	HSPA90100	**£230**	A90AS*	**£340**	HSPA90140	**£315**	A904AS*	**£440**
	1000 x 1000	HSP1000WH*	**£360**	A100AS*	**£480**	HSPA1000140*	**£470**	A104AS*	**£595**
JT ULTRACAST Rectangle									
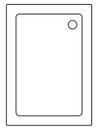	800 x 700	HSP8X7WH*	**£360**	J870AS*	**£580**	—	—	—	—
	900 x 700	HSPA970100*	**£230**	A970AS*	**£405**	HSPA970140*	**£315**	A9704AS*	**£515**
	900 x 760	HSPA976100*	**£230**	A976AS*	**£405**	HSPA976140*	**£315**	A9764AS*	**£515**
	900 x 800	HSPA980100	**£230**	A980AS*	**£405**	HSPA980140	**£315**	A9804AS*	**£515**
	1000 x 700	HSPA1070100*	**£250**	J1070AS*	**£440**	HSPA1070140*	**£360**	A10704AS*	**£545**
	1000 x 760	HSPA1076100*	**£250**	A1076AS*	**£440**	HSPA1076140*	**£360**	A10764AS*	**£545**
	1000 x 800	HSPA1080100	**£250**	A1080AS*	**£440**	HSPA1080140	**£360**	A10804AS*	**£545**
	1000 x 900	HSPA1090100*	**£290**	A1090AS*	**£480**	HSPA1090140*	**£385**	A10904AS*	**£580**
	1100 x 700	HSP11X7WH*	**£290**	J1170AS*	**£480**	—	—	—	—
	1100 x 760	HSP11X76WH*	**£290**	J1176AS*	**£480**	—	—	—	—
	1100 x 800	HSP11X8WH	**£290**	J1180AS*	**£480**	HSPA1180140	**£385**	A11804AS*	**£580**
	1200 x 700	HSPA1270100*	**£290**	A1270AS*	**£480**	HSPA1270140*	**£385**	A12704AS*	**£580**
	1200 x 760	HSPA1276100*	**£290**	A1276AS*	**£480**	HSPA1276140*	**£385**	A12764AS*	**£580**
	1200 x 800	HSPA1280100	**£290**	A1280AS*	**£480**	HSPA1280140	**£385**	A12804AS*	**£580**
	1200 x 900	HSPA1290100	**£290**	A1290AS*	**£480**	HSPA1290140	**£385**	A12904AS*	**£580**
	1200 x 1000	HSPA1210100	**£525**	A1210AS*	**£756**	—	—	—	—

For Trays sizes marked* please allow 4 week delivery for this size tray

ANTI-SLIP SOLUTION IS NOW AVAILABLE ON ALL **KRISTAL** LOW PROFILE & **JT** SHOWER TRAYS

For your additional safety and comfort, the **SONAS Bathrooms Collection** can now offer **Anti-Slip** on its entire range of shower trays. For any new shower tray ordered you can request to have it supplied with a factory fitted Anti-Slip coating.

- Factory applied treatment to aid the prevention of slips and falls
- Class C Slip rating - the highest level of approval for domestic use
- Also available in kit form for retro fitting to existing shower trays and baths
- Conforms BS7976-2 2002

MARKET LEADER BY DESIGN

ALREADY INSTALLED?

For existing baths and shower trays already installed, we have a handy self-application **RETRO FIT KIT** which comes complete with everything you need to apply the coating on site. Suitable for use with Acrylic or Steel baths and shower trays.

PRODUCT CODE: *ASLIP*

£165

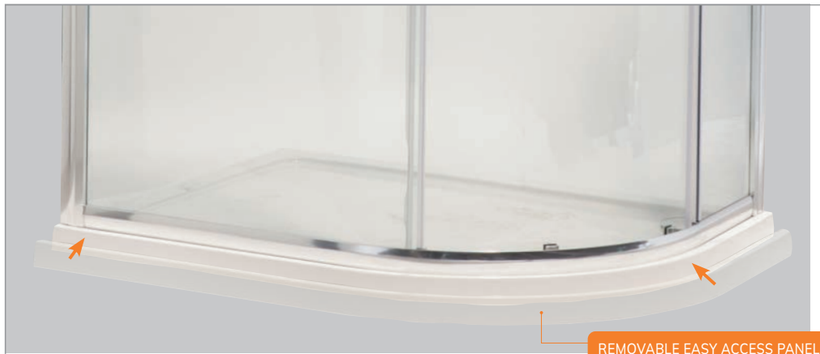

EASY PLUMB EASY ACCESS SHOWER TRAY KIT

SONAS Bathrooms now offer an **Easy Plumb, Easy Access kit** solution across its range of **KRISTAL Low Profile shower trays**.

Loved by installers, the easy plumb installation kit features adjustable legs and loose removable access panels with a unique fastening system. Designed to raise the tray off the floor, it is ideal in applications where the shower tray waste and pipework needs to be plumbed above the floor boards or concrete floor.

The access panels in each easy plumb kit are made to suit various sizes and therefore may need to be cut down on site to suit some tray sizes. Each panel has cut lines clearly marked to suit your tray size.

Please refer to the guide opposite to identify which easy plumb kit you require to make your shower tray **Easy Plumb**.

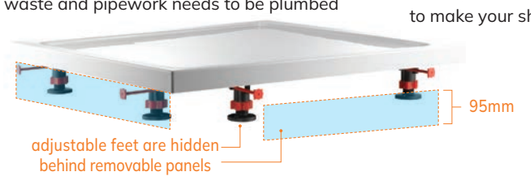

Kit 1 Quadrant	Kit 2 Offset Quadrant
800	1000 x 800
900	1200 x 800
1000	1200 x 900
CODE: FP900Q100	**CODE:** FP1290Q100

Kit 3	Kit 4
700 x 700	1200 x 1000
760 x 760	1300 x 800
800 x 700	1400 x 700
800 x 800	1400 x 800
900 x 700	1400 x 900
900 x 760	1500 x 700
900 x 800	1500 x 760
900 x 900	1500 x 800
1000 x 700	1500 x 900
1000 x 760	1600 x 700
1000 x 800	1600 x 760
1000 x 900	1600 x 800
1100 x 700	1600 x 900
1100 x 760	1700 x 700
1100 x 800	1700 x 760
1100 x 900	1700 x 800
1200 x 700	1700 x 900
1200 x 760	
1200 x 800	
1200 x 900	
CODE: FP1290100	**CODE:** FP1710100

£145

SAFE SEAL

WATERPROOF AND FLEXIBLE SEAL BAND

- Double Seal
- 120mm Tileable Seal
- Easy to Install
- Prevents Leaks
- Flexible & Versatile
- Available in 2, 3, 4 & 5m Rolls

2M ROLL	UST00105	**£40**
3M ROLL	UST00001	**£60**
4M ROLL	UST00103	**£75**
5M ROLL	UST00104	**£95**

SCAN CODE
TO WATCH INSTALLATION VIDEO

sonasbathrooms.com

BATHS

Transform your bathroom into a personal oasis with our exquisite range of baths. Beyond their practicality, baths offer a multitude of benefits that elevate your bathroom design and reflect your unique personality. Versatile in nature, baths take on different personas, adapting to the individual who immerses themselves in its soothing waters. Explore the realm of wellness and hydrotherapy as you indulge in the restorative effects of a bath. Immerse yourself in a tranquil sanctuary, a place to relax and drift away from the stresses of daily life. With our baths, you can create a personal haven where you can luxuriate, finding solace and rejuvenation. Experience the ultimate blend of style, functionality, and well-being, all within the embrace of your own bathroom.

Bath Guide

Freestanding

Create the “wow” factor in your bathroom with one of our stunning freestanding baths. Suited to all spaces, they create a spa-like, luxurious aesthetic. Freestanding baths grant the freedom to place the bath anywhere in your bathroom.

Straight Baths

Straight baths are a popular and versatile option. Typically wall fitted, they are available in single or double ended styles. Double ended baths have taps fitted along one side of the bath, while single ended have taps at one end.

Corner/Offset Baths

The ideal solution for space saving. Corner/Offset baths do not require a long wall as straight baths do, so can be neatly tucked into corners where another bath may not fit. These baths are available in left or right-hand orientation.

Shower Baths

Shower Baths are the perfect balance of luxury and practicality. There are 2 styles to choose from: P-shape and L-shape. These baths are wider at the showering area for comfort when standing. Both are available in left or right-handed orientation.

Steel Baths

Superb value, steel baths offer durability and style with great heat retention. They are also simple to install and present a singular style. Complete the look with bath panels from our Scandinavian or Belmont range.

Slipper Baths

Slipper baths offer a comfortable lounging position for an ultimate relaxation experience. Single-slipper baths elevate at one end, and double-slipper tubs are raised at both ends. Whether reading or simply resting, you can comfortably unwind in a slipper bath.

Endura Baths

For added durability, our range of Endura baths offer additional layers of GRP Reinforcement compared to a standard bath. Endura baths are available in double and single-ended options.

Whirlpool Baths

Luxurious and affordable, whirlpool baths are great for your well-being. Choose from 8 or 12 jets, with the option of an Aqua Light for added opulence. All SONAS Bathrooms acrylic baths are compatible with our whirlpool systems* excluding freestanding baths.

On/off Switch

Directional Whirlpool Jets

Air Control

Safety Suction Filter

Foot & Back Jets

Reimagine...
The Wonder of Colour

With a multitude of colour possibilities to choose from, why live in a neutral world? It's time for you to reimagine life with hues that you have never seen before.

Customise the exterior of our freestanding baths in any RAL colour possible and add personality to your bathroom. Our baths are available in more than **2500 colours** and with distinctive finishes of your choice.

Let SONAS colour your imagination!

NEW

SAMOA

Includes waste and overflow

Length	Width	Height	Code	Price
1700	750	580	UBA00149	**£1495**

WITH CUSTOM COLOUR	UBA00151	**£2370**

All Measurements in mm. All Prices include VAT

NEW

SEREN

Includes waste and overflow

Length	Width	Height	Code	Price
1700	750	580	UBA00150	**£1495**

WITH CUSTOM COLOUR	UBA00152	**£2370**

Taps Not Included See Page 321

ABYSS

Includes waste and overflow

Length	Width	Height	Code	Price
1700	750	580	UBA00054	**£1675**

WITH CUSTOM COLOUR	UBA00060	**£2550**

All Measurements in mm. All Prices include VAT

REEF

Includes waste and overflow

Length	Width	Height	Code	Price
1700	750	570	UBA00056	**£1795**

WITH CUSTOM COLOUR	UBA00061	**£2670**

Taps Not Included See Page 321

COMINO

Length	Width	Height	Code	Price
1700	750	580	UBA00049	**£1675**

Includes waste and overflow

WITH CUSTOM COLOUR	UBA00062	**£2550**

All Measurements in mm. All Prices include VAT

HOWE

Length	Width	Height	Code	Price
1700	750	580	UBA00052	**£1575**

Includes waste and overflow

WITH CUSTOM COLOUR	UBA00063	**£2450**

Taps Not Included See Page 321

LAGUNA

Includes waste and overflow

Length	Width	Height	Code	Price
1700	750	580	UBA00050	**£1675**
WITH CUSTOM COLOUR			UBA00064	**£2550**

LYRA

Includes waste and overflow

Length	Width	Height	Code	Price
1700	800	680	UBA00051	**£1875**
WITH CUSTOM COLOUR			UBA00065	**£2750**

All Measurements in mm. All Prices include VAT

Taps Not Included See Page 321

ONTARIO

Length	Width	Height	Code	Price
1700	750	570	UBA00053	**£1775**

Includes waste and overflow

WITH CUSTOM COLOUR	UBA00066	**£2650**

All Measurements in mm. All Prices include VAT

MAROVO

Length	Width	Height	Code	Price
1600	800	570	UBA00055	**£1775**

Includes waste and overflow

WITH CUSTOM COLOUR	UBA00067	**£2650**

Taps Not Included See Page 321

ANDREA

Length	Width	Height	Code	Price	WITH CUSTOM COLOUR Code	Price
1415	745	580	UBA00045	**£1450**	UBA00072	**£2325**
1555	745	580	UBA00046	**£1475**	UBA00069	**£2350**
1655	745	580	UBA00047	**£1575**	UBA00070	**£2450**
1800	745	580	UBA00048	**£1675**	UBA00071	**£2550**

Includes waste and overflow

All Measurements in mm. All Prices include VAT

MONARCH

Length	Width	Height	Code	Price
1760	700	720	MONA1760	**£1315**

Taps Not Included See Page 321

VICEROY

Length	Width	Height	Code	Price
1530	670	760	VICE1530	**£1115**
1710	710	780	VICE1710	**£1115**

All Measurements in mm. All Prices include VAT

DUCHESS

Length	Width	Height	Code	Price
1690	740	620	DUCH1690	**£1115**

Taps Not Included See Page 321

COUNTESS

Length	Width	Height	Code	Price
1760	700	760	COUNT1760	**£1115**

All Measurements in mm. All Prices include VAT

Floorstanding Bath Shower Mixers

ALITA

Chrome	UBR0146	**£850**
Matt Black	UBR0147	**£995**
Brushed Gold	UBR0149	**£995**
Brushed Nickel	UBR0148	**£995**

Comes with easy fit box

NORFOLK

Chrome	CORN001	**£610**
Matt Black	UBR0056	**£630**
Brushed Gold	UBR0078	**£630**

CONTOUR

Chrome	CCC001	**£610**
Matt Black	UBR0065	**£630**
Brushed Gold	UBR0087	**£630**

HARROW

Chrome	CORN001	**£545**
Matt Black	BLK001	**£620**

SERIES C

MAYC0011 **£545**

CORBY

MYKCOR001 **£610**

EDWARDIAN

MAY80011 **£620**

TRADITIONAL LEVER

MYKTL0011 **£620**

SURREY

CORSR0011 **£620**

min. operating pressure: 1 bar

PLEASE NOTE* Floorstanding bath shower mixer must be supplied to your installer at first fix stage.

CONCERTO Luxury Corner Bath

			BATH ONLY		12 JET WHIRLPOOL BATH		
					Chrome Jets	White Jets	
Length	Width	Depth	Code	Price	Code	Code	Price
1400	1400	370	UBA00032	**£950**	GGICON04	UBA00074	**£1805**

Price includes bath panel. Taps and waste not included. See Pages 172 - 204

Aqua Light
GGILUXPC **£285**

Pump Protection
GGIPP **£230**

Installing a **shower over** a whirlpool bath?
Please inform our team when ordering

All Measurements in mm. All Prices include VAT

MAYA Offset Corner Bath

			BATH ONLY		8 JET WHIRLPOOL BATH			
			£740		£1485			
					Chrome Jets		White Jets	
Length	Width	Depth	Left Hand	Right Hand	Left Hand	Right Hand	Left Hand	Right Hand
1500	1000	450	SANMLHWH	SANMRHWH	GGIMLH05	GGIMRH05	UBA00075	UBA00076

Price includes bath panel. Taps and waste not included. See Pages 172 - 204

Aqua Light
GGILUXPC **£285**

Pump Protection
GGIPP **£230**

Installing a **shower over** a whirlpool bath?
Please inform our team when ordering

Taps Not Included See Pages 172 - 204

Available in LEFT or RIGHT Hand [Left hand shown]

ARC Single Ended Bath

BATH ONLY

Length	Width	Depth	Left Hand	Right Hand	Price
1500	700	400	SANARC15WHL	SANARC15WHR	**£610**
1600	700	400	SANARC16WHL	SANARC16WHR	**£630**
1700	700	400	SANARC17WHL	SANARC17WHR	**£670**
1800	800	400	SANARC18WHL	SANARC18WHR	**£715**

8 JET WHIRLPOOL BATH

			Chrome Jets		White Jets		
Length	Width	Depth	Left Hand	Right Hand	Left Hand	Right Hand	Price
1700	700	400	GGIARC17005L	GGIARC17005R	UBA00079	UBA00080	**£1380**

12 JET WHIRLPOOL BATH

			Chrome Jets		White Jets		
Length	Width	Depth	Left Hand	Right Hand	Left Hand	Right Hand	Price
1700	700	400	GGIARC17004L	GGIARC17004R	UBA00077	UBA00078	**£1485**
1800	800	400	GGIARC18004L	GGIARC18004R	UBA00081	UBA00082	**£1585**

Price includes bath panel. Taps and waste not included. See Pages 172 - 204

Aqua Light
GGILUXPC **£285**

Pump Protection
GGIPP **£230**

Installing a **shower over** a whirlpool bath?
Please inform our team when ordering

All Measurements in mm. All Prices include VAT

CADENZA Single Ended Bath with Integrated Handles

			BATH ONLY		8 JET WHIRLPOOL BATH			12 JET WHIRLPOOL BATH		
					Chrome Jets	White Jets		Chrome Jets	White Jets	
Length	Width	Depth	Code	Price	Code	Code	Price	Code	Code	Price
1700	700	420	UBA00022	**£475**	GGICAD05	UBA00084	**£1225**	GGICAD04	UBA00083	**£1365**

See Page 340 for Bath Panels. Taps and waste not included. See Pages 172 - 204

Aqua Light
GGILUXPC **£285**

Pump Protection
GGIPP **£230**

Installing a **shower over** a whirlpool bath?
Please inform our team when ordering

Taps Not Included See Pages 172 - 204

Available in LEFT or RIGHT Hand [Left hand shown]

CLEAR SHIELD

L SHAPE bath screen features **CLEAR SHIELD** water repellent glass which helps prevent the build up of limescale dirt and soap deposits making glass easy to clean

L SHAPE Single Ended Shower Bath

Length: 1700 **Width:** 850 **Depth:** 385

BATH ONLY		8 JET WHIRLPOOL BATH				12 JET WHIRLPOOL BATH			
£950		£1695				£1805			
		Chrome Jets		White Jets		Chrome Jets		White Jets	
Left Hand	Right Hand	Left Hand	Right Hand	Left Hand	Right Hand	Left Hand	Right Hand	Left Hand	Right Hand
SANLSBL	SANLSBR	GGILS005L	GGILS005R	UBA00087	UBA00088	GGILS004L	GGILS004R	UBA00085	UBA00086

Price includes: fixed bath screen & front bath panel

END Panel SANPLEND **£140**

Taps and waste not included. See Pages 172 - 204

Aqua Light
GGILUXPC **£285**

Pump Protection
GGIPP **£230**

Installing a **shower over** a whirlpool bath? **Please inform** our team when ordering

All Measurements in mm. All Prices include VAT

Available in LEFT or RIGHT Hand [Right hand shown]

CLEAR SHIELD

P SHAPE bath screen features **CLEAR SHIELD** water repellent glass which helps prevent the build up of limescale dirt and soap deposits making glass easy to clean

P SHAPE Single Ended Shower Bath

Length: 1700 **Width:** 900 **Depth:** 380

BATH ONLY		8 JET WHIRLPOOL BATH				12 JET WHIRLPOOL BATH			
£950		£1695				£1805			
		Chrome Jets		White Jets		Chrome Jets		White Jets	
Left Hand	Right Hand	Left Hand	Right Hand	Left Hand	Right Hand	Left Hand	Right Hand	Left Hand	Right Hand
SANPSBL	SANPSBR	GGIPS005L	GGIPS005R	UBA00091	UBA00092	GGIPS004L	GGIPS004R	UBA00089	UBA00090

Price includes: fixed bath screen & front bath panel

END Panel SANPLEND **£140**

Taps and waste not included. See Pages 172 - 204

Aqua Light
GGILUXPC **£285**

Pump Protection
GGIPP **£230**

Installing a **shower over** a whirlpool bath? **Please inform** our team when ordering

Taps Not Included See Pages 172 - 204

OSCAR

Single Ended

			BATH ONLY	8 JET WHIRLPOOL BATH			12 JET WHIRLPOOL BATH		
				Chrome Jets	White Jets		Chrome Jets	White Jets	
Length	Width	Depth	Code	Code	Code	Price	Code	Code	Price
1700	700	400	SANOSSE170WH	GGIOSSE17005	UBA00100	£1180	GGIOSSE17004	UBA00099	£1315
1700	750	400	SANOSSE170WH £490	GGIOSSE17505	UBA00102	£1215	GGIOSSE17504	UBA00101	£1360
1800	800	400	SANOSSE180WH	GGIOSSE18005	UBA00104	£1285	GGIOSSE18004	UBA00103	£1425

Double Ended

			BATH ONLY	8 JET WHIRLPOOL BATH			12 JET WHIRLPOOL BATH		
				Chrome Jets	White Jets		Chrome Jets	White Jets	
Length	Width	Depth	Code	Code	Code	Price	Code	Code	Price
1700	700	400	SANOSDE170WH	GGIOSDE17005	UBA00094	£1180	GGIOSDE17004	UBA00093	£1315
1700	750	400	SANOSDE175WH	GGIOSDE17505	UBA00096	£1215	GGIOSDE17504	UBA00095	£1360
1800	800	400	SANOSDE180WH	GGIOSDE18005	UBA00098	£1285	GGIOSDE18004	UBA00097	£1425

See Page 340 for Bath Panels. Taps and waste not included. See Pages 172 - 204

Aqua Light
GGILUXPC £285

Pump Protection
GGIPP £230

Installing a **shower over** a whirlpool bath?
Please inform our team when ordering

All Measurements in mm. All Prices include VAT

CLOVER Double Ended Bath

			BATH ONLY	8 JET WHIRLPOOL BATH			12 JET WHIRLPOOL BATH		
				Chrome Jets	White Jets		Chrome Jets	White Jets	
Length	Width	Depth	Code	Code	Code	Price	Code	Code	Price
1700	750	400	SANCLO17WH	£340	GGICLO1705	UBA00106	£1040	GGICLO1704	UBA00105	£1200
1800	800	400	SANCLO18WH	£410	GGICLO1805	UBA00108	£1145	GGICLO1804	UBA00107	£1250

See Page 340 for Bath Panels. Taps and waste not included. See Pages 172 - 204

Aqua Light
GGILUXPC £285

Pump Protection
GGIPP £230

Installing a **shower over** a whirlpool bath?
Please inform our team when ordering

Taps Not Included See Pages 172 - 204

PACIFIC Extra Deep Baths

PACIFIC Single Ended

PACIFIC Double Ended

PACIFIC Single Ended

			BATH ONLY		8 JET WHIRLPOOL BATH			12 JET WHIRLPOOL BATH		
					Chrome Jets	White Jets		Chrome Jets	White Jets	
Length	Width	Depth	Code	Price	Code	Code	Price	Code	Code	Price
1700	700	700	UBA00041	**£520**	GGIPACSE167005	UBA00119	**£1275**	——	——	——
1700	700	700	UBA00042	**£535**	GGIPACSE177005	UBA00121	**£1285**	GGIPACSE177004	UBA00120	**£1430**
1700	750	750	UBA00043	**£560**	GGIPACSE177505	UBA00123	**£1305**	GGIPACSE177504	UBA00122	**£1450**
1800	800	800	UBA00044	**£585**	——	——	——	GGIPACSE188004	UBA00124	**£1485**

PACIFIC Double Ended

			BATH ONLY		8 JET WHIRLPOOL BATH			12 JET WHIRLPOOL BATH		
					Chrome Jets	White Jets		Chrome Jets	White Jets	
Length	Width	Depth	Code	Price	Code	Code	Price	Code	Code	Price
1600	700	420	UBA00033	**£520**	GGIPACDE167005	UBA00109	**£1275**	——	——	——
1700	700	450	UBA00034	**£535**	GGIPACDE177005	UBA00111	**£1285**	GGIPACDE177004	UBA00110	**£1430**
1700	750	450	UBA00035	**£560**	GGIPACDE177505	UBA00113	**£1305**	GGIPACDE177504	UBA00112	**£1450**
1800	800	490	UBA00036	**£585**	——	——	——	GGIPACDE188004	UBA00114	**£1485**
1800	900	490	UBA00037	**£695**	——	——	——	GGIPACDE189004	UBA00115	**£1585**
1900	800	490	UBA00038	**£695**	——	——	——	GGIPACDE198004	UBA00116	**£1585**
1900	900	490	UBA00039	**£740**	——	——	——	GGIPACDE199004	UBA00117	**£1625**
2000	900	490	UBA00040	**£790**	——	——	——	GGIPACDE209004	UBA00118	**£1655**

See Page 340 for Bath Panels. Taps and waste not included. See Pages 172 - 204

Aqua Light

GGILUXPC **£285**

Pump Protection

GGIPP **£230**

Installing a **shower over** a whirlpool bath?
Please inform our team when ordering

PACIFIC ENDURA Extra Deep Baths

PACIFIC **ENDURA** Single Ended

PACIFIC **ENDURA** Double Ended

PACIFIC ENDURA baths use additional layers of GRP Reinforcement that improve the overall strength of the bath.

40% heavier than a standard bath

PACIFIC ENDURA Single Ended — Extra Deep Baths

			BATH ONLY		8 JET WHIRLPOOL BATH			12 JET WHIRLPOOL BATH		
					Chrome Jets	White Jets		Chrome Jets	White Jets	
Length	Width	Depth	Code	Price	Code	Code	Price	Code	Code	Price
1700	700	700	UBA00009	**£630**	GGIENSE167005	UBA00135	**£1355**	——	——	——
1700	700	700	UBA00010	**£640**	GGIENSE177005	UBA00137	**£1380**	GGIENSE177004	UBA00136	**£1485**
1700	750	750	UBA00011	**£675**	GGIENSE177505	UBA00139	**£1410**	GGIENSE177504	UBA00138	**£1515**
1800	800	800	UBA00012	**£695**	——	——	——	GGIENSE188004	UBA00140	**£1585**

PACIFIC ENDURA Double Ended — Extra Deep Baths

			BATH ONLY		8 JET WHIRLPOOL BATH			12 JET WHIRLPOOL BATH		
					Chrome Jets	White Jets		Chrome Jets	White Jets	
Length	Width	Depth	Code	Price	Code	Code	Price	Code	Code	Price
1600	700	420	UBA00001	**£630**	GGIENDE167005	UBA00125	**£1355**	——	——	——
1700	700	450	UBA00002	**£640**	GGIENDE177005	UBA00127	**£1380**	GGIENDE177004	UBA00126	**£1485**
1700	750	450	UBA00003	**£675**	GGIENDE177505	UBA00129	**£1410**	GGIENDE177504	UBA00128	**£1515**
1800	800	490	UBA00004	**£695**	——	——	——	GGIENDE188004	UBA00130	**£1585**
1800	900	490	UBA00005	**£825**	——	——	——	GGIENDE189004	UBA00131	**£1695**
1900	800	490	UBA00006	**£825**	——	——	——	GGIENDE198004	UBA00132	**£1695**
1900	900	490	UBA00007	**£840**	——	——	——	GGIENDE199004	UBA00133	**£1760**
2000	900	490	UBA00008	**£890**	——	——	——	GGIENDE209004	UBA00134	**£1780**

See Page 340 for Bath Panels. Taps and waste not included. See Pages 172 - 204

Aqua Light
GGILUXPC **£285**

Pump Protection
GGIPP **£230**

Installing a **shower over** a whirlpool bath? **Please inform** our team when ordering

Taps Not Included See Pages 172 - 204

CUBO Single Ended Bath

			BATH ONLY		8 JET WHIRLPOOL BATH			12 JET WHIRLPOOL BATH		
					Chrome Jets	White Jets		Chrome Jets	White Jets	
Length	**Width**	**Depth**	**Code**	**Price**	**Code**	**Code**	**Price**	**Code**	**Code**	**Price**
1600	700	400	UBA00027	**£350**	GGICUB167005	UBA00141	**£1105**	——	——	——
1700	700	400	UBA00028	**£360**	GGICUB177005	UBA00143	**£1110**	GGICUB177004	UBA00142	**£1250**
1700	750	400	UBA00029	**£390**	GGICUB177505	UBA00145	**£1135**	GGICUB177504	UBA00144	**£1285**
1700	800	400	UBA00030	**£445**	GGICUB178005	UBA00147	**£1185**	GGICUB178004	UBA00146	**£1335**
1800	800	400	UBA00031	**£465**	——		——	GGICUB188004	UBA00148	**£1350**

See Page 340 for Bath Panels. Taps and waste not included. See Pages 172 - 204

Aqua Light
GGILUXPC **£285**

Pump Protection
GGIPP **£230**

Installing a **shower over** a whirlpool bath?
Please inform our team when ordering

All Measurements in mm. All Prices include VAT

STRATA Single Ended Steel Bath

STEEL BATHS ARE **100% RECYCLABLE**

Length	Width	Depth	Bath Only	Bath with Twin Grips & Anti-Slip	Bath with Twin Grips	Bath with Anti-Slip
1500	700	390	SSB157PLNGR	SSB157ASGR	SSB157PLGR	SSB157ASNGR
1600	700	390	SSB167PLNGR	SSB167ASGR	SSB167PLGR	SSB167ASNGR
1700	700	390	SSB177PLNGR	SSB177ASGR	SSB177PLGR	SSB177ASNGR
			£340	**£435**	**£410**	**£365**

Whirlpool system cannot be fitted to steel baths

LOTUS Single Ended Acrylic Bath

Length	Width	Depth	Single Ended	Single Ended with Twin Grips
1500	700	370	SANLOT15WH	——
1600	700	370	SANLOT16WH	——
1700	700	370	SANLOT17WH	SANLOT17T/GWH
			£310	**£310**

Taps Not Included See Pages 172 - 204

LUNAR Bath Screens

LUNAR SB6

LUNAR SB5

LUNAR SB3

LUNAR SB1 · Matt Black

LUNAR SB1 · Brushed Gold

LUNAR Bath Screens

LUNAR SB1
Radius Bathscreen, L800 x H1400mm

Chrome	LBS001	**£200**
Matt Black	LBS007	**£235**
Brushed Gold	LBS009	**£235**
Brushed Nickel	LBS010	**£235**

6mm

LUNAR SB2
Square Edge Bathscreen
L800 x H1400mm

LBS002	**£200**

6mm

LUNAR SB3
Radius Bathscreen with Towel Rail
L950 x H1400mm

LBS003	**£310**

6mm

LUNAR SB4
Hinged Radius Bathscreen with Towel Rail
L1250 x H1400mm

LBS004	**£365**

6mm

LUNAR SB5
Hinged Bathscreen
L980 x H1500mm

LBS005	**£345**

8mm

LUNAR SB6
Two Panel Hinged Bathscreen
L1000 x H1500mm

LBS006	**£415**

8mm

All Measurements in mm. All Prices include VAT

SCANDINAVIAN Universal Bath Panels

		FRONT PANELS		END PANELS		
		1700	1800	700	750	800
		£245	£255	£125	£140	£140
Gloss White		UF0187	UF0194	UF0201	UF0208	UF0215
White Matt		UF0378	UF0383	UF0388	UF0393	UF0398
Matt Black		UF0504	UF0505	UF0506	UF0507	UF0508
Sun Kissed Yellow Matt		UF0509	UF0510	UF0511	UF0512	UF0513
Cashmere Pink Matt		UF0380	UF0385	UF0390	UF0395	UF0400
Morning Sky Blue Matt		UF0379	UF0384	UF0389	UF0394	UF0399
Ocean Blue Matt		UF0181	UF0188	UF0195	UF0202	UF0209
Night Sky Blue Matt		UF0182	UF0189	UF0196	UF0203	UF0210
Khaki Matt		UF0186	UF0193	UF0200	UF0207	UF0214
Coral Green Matt		UF0381	UF0386	UF0391	UF0396	UF0401
Wreath Green Matt		UF0382	UF0387	UF0392	UF0397	UF0402
Arctic Grey Matt		UF0185	UF0192	UF0199	UF0206	UF0213
Dolphin Grey Matt		UF0184	UF0191	UF0198	UF0205	UF0212
Midnight Grey Matt		UF0183	UF0190	UF0197	UF0204	UF0211

Bath panels are supplied with adjustable height plinth between 40-59cm

BELMONT White Wooden Bath Panels

FRONT PANELS		END PANELS		
1700	1800	700	750	800
£175	£199	£90	£90	£108
ELTFP17WH	ELTFP18WH	ELTEP70WH	ELTEP75WH	ELTEP80WH

Bath panels are supplied with adjustable height plinth between 40-59cm

All Measurements in mm. All Prices include VAT

Bath Waste Fittings

Round Overflow Bath Filler & Waste

Chrome	UBR0107	£95
Matt Black	UBR0108	£120
Brushed Gold	UBR0109	£120
Brushed Nickel	UBR0116	£120

SYNC Brass Luxury Round pop up waste

Chrome	UBR0024	£80
Matt White	UBR0170	£95
Matt Black	UBR0025	£95
Brushed Gold	UBR0026	£95
Brushed Nickel	UBR0138	£95

Bath Waste
and plug
UBR0039 **£16**

Bath Pop Up Waste
plastic
UBR0046 **£50**

Extended
Bath pop-up Waste
UBR0115 **£95**

Tidy Bath Waste
MAYACC033CP **£30**

Traditional Bath Waste Fittings

Exposed Bath Waste
with retaining plug
UBR0113 **£155**

Exposed Bath Trap
UBR0114 **£125**

Includes: exposed bath waste with retaining plug, standpipes, exposed trap
Standpipes in this kit are only suitable as pipe shrouds and are mounted to the underside of bath taps
UBR0036 **£310**

HEATING

Elevate your bathroom comfort and experience luxurious warmth with our stylish range of heated towel rails and radiators. Not only do they provide a cosy and comfortable environment, but they also add to the overall aesthetics of your space. Our collection of heated towel rails and radiators is built with enduring quality and compliance, ensuring peace of mind for homeowners.

With rigorous testing and adherence to industry standards, you can trust that our products deliver superior performance and longevity. Choose from vertical or horizontal designs to suit your bathroom layout and maximise space efficiency.

Our ranges also offer a wide selection of stunning finishes, such as chrome, matt black, brushed gold, and brushed nickel, allowing you to effortlessly complement your bathroom decor and create a cohesive design. Treat yourself to the ultimate indulgence by stepping into a warm and inviting bathroom. Explore our beautiful range of heated towel rails and radiators and enhance both the functionality and style of your space. Embrace the comfort and elegance that our collection has to offer and transform your bathroom into a haven of relaxation.

Radiator Guide

Vertical

Vertical heated rails make the most of your available wall space, allowing you to choose a wider vanity unit or shower enclosure. These rails offer a striking focal point and are available in innovative contemporary designs.

Ladder

Ladder heated rails are a stylish bathroom staple. These rails are available in three colour options and a variety of sizes. Ladder heated rails offer a sleek and minimalistic look, keeping your towel snug, warm and ready for use.

Stainless Steel Towel Warmers

Stainless steel is a versatile, strong, and durable material that is resistant to rust and corrosion. Easy to clean, it has a modern appearance, and is environmentally friendly, making it ideal for everyday life.

Horizontal

Horizontal heated rails are neat, compact and perfect for placing under windows. This is usually the coldest place in the room. Placing a heated rail here will protect against the cold and makes good use of your wall space.

Traditional

The timeless range of Traditional heated rails are the perfect addition to your classic bathroom design. The timeless range combines form and function and will confer on your space an air of elegance.

Speak to your qualified installer about your heating system type and the BTU requirement. BTU (British Thermal Unit) is the measurement used to calculate how much heat output is needed to warm a room. It's important that this is calculated accurately, to make sure your comfort level matches your space.

ARYA Stainless Steel Towel Warmers

Polished Steel | Matt Black | Brushed Gold | Brushed Nickel

Ø25 mm

10 YEAR WARRANTY

Experience the ultimate bathroom upgrade with our ARYA range of stainless steel towel warmers. Crafted from high-quality stainless steel, a strong and durable material, they offer longevity and exceptional heat distribution.

No more waiting for your towels to warm up on chilly mornings. Efficient heat distribution is the key feature of the ARYA range. With rapid heating capabilities, the range provides you with warm towels in a matter of minutes.

What truly sets the ARYA range apart is its remarkable durability and efficiency. Corrosion-resistant, they will maintain their pristine appearance over time, ensuring a long-lasting investment for your bathroom.

Say goodbye to standard radiators and embrace the benefits of premium quality stainless steel.

All Measurements in mm. All Prices include VAT

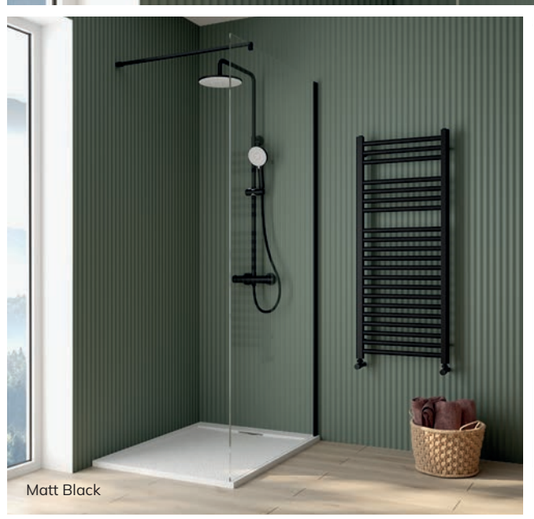

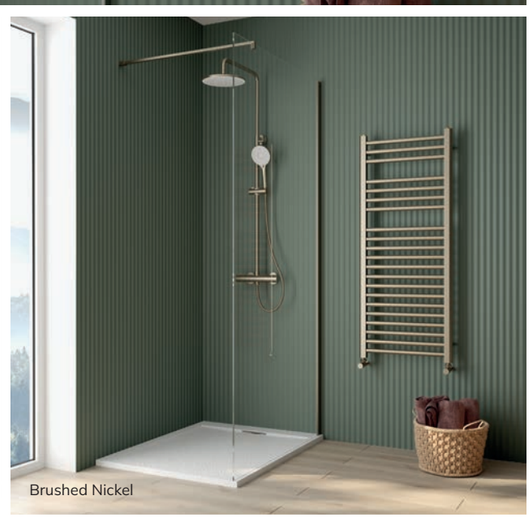

Height (mm)	Width (mm)
1200mm	500mm

Finish/Colour	Pipe Centre (mm)	BTU	Code	Price
Polished Steel	450	1376	UHT00001	**£475**
Matt Black	450	1743	UHT00002	**£475**
Brushed Gold	450	1376	UHT00003	**£575**
Brushed Nickel	450	1376	UHT00004	**£575**

See Page 357 for Radiator Valves

PIATTO

SINGLE PANEL

PIATTO 376 Single **£365**

Flat tube single panel
BTU 2525, pipe centre 450mm
H1800 x W376mm

Anthracite		PSP1837AT
Matt Black		PSP1837BK
White		PSP1837WH

PIATTO 452 Single **£415**

Flat tube single panel
BTU 3031, pipe centre 520mm
H1800 x W452mm

Anthracite		PSP1845AT
Matt Black		PSP1845BK
White		PSP1845WH

DOUBLE PANEL

PIATTO 380 Double **£630**

Flat tube double panel
BTU 4895, pipe centre 450mm
H1800 x W380mm

Anthracite		PDP1838AT
Matt Black		PDP1838BK
White		PDP1838WH

PIATTO 456 Double **£665**

Flat tube double panel
BTU 5874, pipe centre 530mm
H1800 x W456mm

Anthracite		PDP1845AT
Matt Black		PDP1845BK
White		PDP1845WH

All Measurements in mm. All Prices include VAT

COMO

COMO

Flat tube
BTU 1620, pipe centre 80mm
H1126 x W550mm

Chrome	CO1255CP	**£630**
Anthracite	CO1255AT	**£520**

SYNERGY

SYNERGY 1220

Complete with chrome brackets
BTU 1249, pipe centre 520mm
H1220 x W452mm

Anthracite	SY1245AT	**£580**

SYNERGY 1820

Complete with chrome brackets
BTU 1845, pipe centre 520mm
H1820 x W452mm

Anthracite	SY1845AT	**£690**

See Page 357 for Radiator Valves

AMURA

SINGLE PANEL

AMURA 360 Single **£365**

Elliptical tube **vertical** single panel
BTU 2426, pipe centre 430mm
H1800 x W360mm

Anthracite	ASPV1836AT
Matt Black	ASPV1836BK
White	ASPV1836WH

AMURA 480 Single **£415**

Elliptical tube **vertical** single panel
BTU 3234, pipe centre 550mm
H1800 x W480mm

Anthracite	ASPV1848AT
Matt Black	ASPV1848BK
White	ASPV1848WH

DOUBLE PANEL

AMURA 360 Double **£610**

Elliptical tube **vertical** double panel
BTU 4724, pipe centre 430mm
H1800 x W360mm

Anthracite	ADPV1836AT
Matt Black	ADPV1836BK
White	ADPV1836WH

AMURA 480 Double **£665**

Elliptical tube **vertical** double panel
BTU 6299, pipe centre 550mm
H1800 x W480mm

Anthracite	ADPV1848AT
Matt Black	ADPV1848BK
White	ADPV1848WH

All Measurements in mm. All Prices include VAT

SINGLE PANEL

AMURA with Mirror **£580**

Elliptical tube **vertical** single panel
BTU 2508, pipe centre 570mm
H1800 x W500mm

Anthracite	ASPM1850AT

DOUBLE PANEL

AMURA with Mirror **£840**

Elliptical tube **vertical** double panel
BTU 5573, pipe centre 570mm
H1800 x W500mm

Anthracite	ADPM1850AT

SINGLE PANEL

AMURA 600 Single **£280**

Elliptical tube **horizontal** single panel
BTU 1489, pipe centre 670mm
H600 x W600mm

Anthracite	ASPH60AT
Matt Black	ASPH60BK

DOUBLE PANEL

AMURA 600 Double **£415**

Elliptical tube **horizontal** double panel
BTU 2766, pipe centre 670mm
H600 x W600mm

Anthracite	ADPH60AT
Matt Black	ADPH60BK

See Page 357 for Radiator Valves

FORGE

FORGE 1200
H1200 x W500mm

	Pipe Centre (mm)	BTU	Code	Price
Chrome	450	1645	FOR12050CP	**£630**
Anthracite	450	1687	FOR1250AT	**£520**

FORGE 800
H800 x W500mm

	Pipe Centre (mm)	BTU	Code	Price
Chrome	450	908	FOR8050CP	**£470**
Anthracite	450	1124	FOR0850AT	**£400**

All Measurements in mm. All Prices include VAT

ASHTON

ASHTON 1200
H1200 x W500mm

	Pipe Centre (mm)	BTU	Code	Price
Chrome	450	1687	ASH12050CP	**£475**
Anthracite	450	1924	ASH1250AT	**£415**

ASHTON 800
H800 x W500mm

	Pipe Centre (mm)	BTU	Code	Price
Chrome	450	1124	ASH8050CP	**£365**
Anthracite	450	1362	ASH0850AT	**£305**

See Page 357 for Radiator Valves

CURVED

	Height (mm)	Width (mm)	Finish/Colour		Pipe Centre (mm)	BTU	Code	Price
	1800	500	Chrome		460	2259	STW185CCP	£280
			—	—	—	—	—	—
			—	—	—	—	—	—
		600	Chrome		560	2570	STW186CCP	£290
			—	—	—	—	—	—
			—	—	—	—	—	—
	1200	500	Chrome		460	1436	STW125CCP	£200
			Anthracite		460	2154	STW125CAT	£190
			Matt Black		460	2154	STW125CBLK	£190
		600	Chrome		560	1633	STW126CCP	£225
			Anthracite		560	2451	STW126CAT	£200
			Matt Black		560	2451	STW126CBLK	£200
	800	500	Chrome		460	1027	STW085CCP	£145
			Anthracite		460	1540	STW085CAT	£140
			Matt Black		460	1540	STW085CBLK	£140
		600	Chrome		560	1168	STW086CCP	£165
			Anthracite		560	1572	STW086CAT	£145
			Matt Black		560	1572	STW086CBLK	£145

All Measurements in mm. All Prices include VAT

STRAIGHT

	Height (mm)	Width (mm)	Finish/Colour		Pipe Centre (mm)	BTU	Code	Price
	1800	500	Chrome		460	2259	STW185SCP	£280
			—	—	—	—	—	—
			—	—	—	—	—	—
		600	Chrome		560	2570	STW186SCP	£290
			—	—	—	—	—	—
			—	—	—	—	—	—
	1200	500	Chrome		460	1436	STW125SCP	£200
			Anthracite		460	2154	STW125SAT	£190
			Matt Black		460	2154	STW125SBLK	£190
		600	Chrome		560	1633	STW126SCP	£225
			Anthracite		560	2451	STW126SAT	£200
			Matt Black		560	2451	STW126SBLK	£200
	800	500	Chrome		460	1027	STW085SCP	£145
			Anthracite		460	1540	STW085SAT	£140
			Matt Black		460	1540	STW085SBLK	£140
		600	Chrome		560	1168	STW086SCP	£165
			Anthracite		560	1572	STW086SAT	£145
			Matt Black		560	1572	STW086SBLK	£145

See Page 357 for Radiator Valves

CROFT

H940 x W474 x D135mm
BTU 1383, pipe centre 265mm

CRO940	**£575**

CHAPEL 1

H952 x W659 x D235mm
BTU 2420, pipe centre 425mm

CH659	**£680**

CHAPEL 2

H952 x W479 x D235mm
BTU 1386, pipe centre 255mm

CH479	**£620**

All Measurements in mm. All Prices include VAT

RADIATOR VALVES

Finish/Colour	Straight	Angled	Price
Chrome	RSVAL01	RAVAL01	**£35**
Anthracite	RSVAL02	RAVAL02	**£35**
Matt Black	RSVAL03	RAVAL03	**£35**
Brushed Gold	UHT00011	UHT00007	**£45**
Brushed Nickel	UHT00012	UHT00008	**£45**

	Straight	Angled	Price
Thermostatic	TRV002	TRV001	**£25**

	Straight	Angled	Price
Traditional	TSVAL03	TAVAL03	**£65**

ACCESSORIES

Complete the look of your bathroom and add those all-important finishing touches with our exquisite collection of bathroom accessories. We understand the significance of these small details in tying together the overall design and creating a cohesive and stylish space. From sleek and modern to timeless and traditional, our accessories come in a variety of styles, colours, and options, allowing you to find the perfect match for your bathroom.

Elevate both the functionality and aesthetic appeal of your space with our thoughtfully crafted range of towel rails, tumblers, robe hooks, and more. Experience the transformative power of attention to detail with our exceptional bathroom accessories that are sure to leave a lasting impression.

HAKK

Chrome · Matt Black · Brushed Gold · Brushed Nickel · Frosted Glass

PVD COATED · 15 YEAR WARRANTY

NEW RANGE

Brushed Nickel

Brushed Gold

Matt Black

Toothbrush Holder

Chrome	UA0104	£60		Brushed Gold	UA0106	£75
Matt Black	UA0105	£75		Brushed Nickel	UA0107	£75

Robe Hook

Chrome	UA0124	£40		Brushed Gold	UA0126	£45
Matt Black	UA0125	£45		Brushed Nickel	UA0127	£45

Toilet Roll Holder

Chrome	UA0109	£65		Brushed Gold	UA0111	£75
Matt Black	UA0110	£75		Brushed Nickel	UA0112	£75

Towel Ring

Chrome	UA0114	£65		Brushed Gold	UA0116	£75
Matt Black	UA0115	£75		Brushed Nickel	UA0117	£75

Towel Rail 45cm

Chrome	UA0119	£90		Brushed Gold	UA0121	£105
Matt Black	UA0120	£105		Brushed Nickel	UA0122	£105

ALITA

Chrome · Matt Black · Brushed Gold · Brushed Nickel · Frosted Glass

PVD COATED · 15 YEAR WARRANTY

Toothbrush Holder

Chrome	UA0088	£60
Matt Black	UA0089	£75
Brushed Gold	UA0090	£75
Brushed Nickel	UA0091	£75

Robe Hook

Chrome	UA0072	£40
Matt Black	UA0073	£45
Brushed Gold	UA0074	£45
Brushed Nickel	UA0075	£45

Toilet Roll Holder

Chrome	UA0076	£65
Matt Black	UA0077	£75
Brushed Gold	UA0078	£75
Brushed Nickel	UA0079	£75

Towel Holder

Chrome	UA0080	£65
Matt Black	UA0081	£75
Brushed Gold	UA0082	£75
Brushed Nickel	UA0083	£75

Towel Rail 45cm

Chrome	UA0084	£90
Matt Black	UA0085	£105
Brushed Gold	UA0086	£105
Brushed Nickel	UA0087	£105

ARCANA

Chrome · Matt Black · Brushed Gold · Brushed Nickel · Frosted Glass

10 YEAR WARRANTY

Toothbrush Holder

Chrome	UA0025	£40
Matt Black	UA0030	£50
Brushed Gold	UA0103	£50
Brushed Nickel	UA0102	£50

Robe Hook

Chrome	UA0022	£30
Matt Black	UA0027	£40
Brushed Gold	UA0095	£40
Brushed Nickel	UA0094	£40

Toilet Roll Holder

Chrome	UA0021	£40
Matt Black	UA0026	£50
Brushed Gold	UA0093	£50
Brushed Nickel	UA0092	£50

Towel Holder

Chrome	UA0023	£40
Matt Black	UA0028	£50
Brushed Gold	UA0097	£50
Brushed Nickel	UA0096	£50

Towel Rail 45cm

Chrome	UA0024	£60
Matt Black	UA0029	£75
Brushed Gold	UA0099	£75
Brushed Nickel	UA0098	£75

GENESIS

Chrome

Frosted Glass

10 YEAR WARRANTY

Toothbrush Holder

UA0035 **£60**

Robe Hook

UA0032 **£40**

Toilet Roll Holder

UA0031 **£60**

Towel Ring

UA0033 **£60**

Towel Rail 45cm

UA0034 **£95**

PARMA

Chrome

Frosted Glass

10 YEAR WARRANTY

Toothbrush Holder

UA0015 **£40**

Robe Hook

UA0012 **£30**

Toilet Roll Holder

UA0011 **£40**

Towel Ring

UA0013 **£40**

Towel Rail 45cm

UA0014 **£60**

BETA

Chrome

Frosted Glass

10 YEAR WARRANTY

Toothbrush Holder

UA0020 **£40**

Robe Hook

UA0017 **£30**

Toilet Roll Holder

UA0016 **£40**

Towel Ring

UA0018 **£40**

Towel Rail 45cm

UA0019 **£60**

AVA

Chrome

Frosted Glass

10 YEAR WARRANTY

Toothbrush Holder

UA0005 **£35**

Robe Hook

UA0002 **£30**

Toilet Roll Holder

UA0001 **£35**

Towel Ring

UA0003 **£35**

Towel Rail 45cm

UA0004 **£50**

PIAVE

Chrome

Frosted Glass

10 YEAR WARRANTY

Toothbrush Holder

UA0010 **£35**

Robe Hook

UA0007 **£30**

Toilet Roll Holder

UA0006 **£35**

Towel Ring

UA0008 **£35**

Towel Rail 45cm

UA0009 **£50**

STOCKTON

Chrome

10 YEAR WARRANTY

Ceramic Soap Dish

STOACC006 **£45**

Double Robe Hook

STOACC009 **£25**

Traditional
Open Toilet Roll Holder

STOACC001 **£35**

Traditional
Toilet Roll Holder

STOACC004 **£50**

Towel Ring

STOACC002 **£40**

Corner Soap Basket

STOACC007 **£115**

Towel Rail

STOACC005 **£80**

Bath Rack

STOACC008 **£175**

Wall Mounted Shower Basket

STOACC003 **£135**

UNIVERSAL ACCESSORIES

Matt Black

Chrome

Frosted Glass

10 YEAR WARRANTY

CORA Chrome
Corner Shower Basket

UA0038 **£75**

CORA
Wire Shower Basket

UA0040 **£80**

CORA Chrome
Shower Basket

UA0036 **£75**

CORA Black
Corner Shower Basket

UA0039 **£75**

CORA Black
Wire Shower Basket

UA0041 **£80**

CORA Black
Shower Basket

UA0037 **£75**

STESSA Chrome
ROUND Toilet Brush Holder

UA0046 **£45**

STESSA Black
ROUND Toilet Brush Holder

UA0048 **£45**

STESSA Chrome
SQUARE Toilet Brush Holder

UA0047 **£45**

STESSA Chrome
Glass Shelf Round

UA0052 **£75**

STESSA Chrome
Glass Shelf Square

UA0053 **£75**

STESSA Chrome
Angled Grab Rail

UA0050 **£145**

STESSA Chrome
Towel Shelf

UA0051 **£95**

ASTER Chrome
Towel Stand

UA0044 **£120**

ASTER Black
Towel Stand

UA0045 **£120**

ASTER Black
Butler

UA0043 **£120**

ASTER Chrome
Butler

UA0042 **£120**

WESTBURY

Chrome

10 YEAR WARRANTY

Toothbrush Holder

WES027 **£65**

Ceramic Soap Dish

WES024 **£55**

Robe Hook

WES025 **£40**

Toilet Roll Holder

WES019 **£45**

Towel Ring

WES020 **£65**

Soap Dispenser

WES035 **£120**

Mirror

WES032 **£165**

Wall Mounted Toilet Brush & Holder

WES036 **£145**

Glass Shelf

W480 x D155mm

WES026 **£95**

Single Towel Rail 68cm

WES022 **£105**

Arched Mirror

W500 x H680mm

WES023 **£185**

Double Towel Rail 68cm

WES021 **£155**

TECHNICAL SPECIFICATION

We know precision is an important part of planning your dream bathroom, that's why in the following section we have collated specific technical information on the **SONAS Bathrooms** products featured in this brochure.

All the basic detail and information you require is presented in an easy to use format, however should you require any further information or general advice, please do not hesitate to contact your approved **SONAS** dealer.

Planning tips to help you design your dream bathroom

1 Measure your bathroom carefully. Using our grid on the opposite page draw out your bathroom space to scale.

2 Accurately mark out all fixtures such as doors, windows and radiators, also making note of which way and how much the door protrudes into the room.

3 Draw in shapes to best represent your bathroom items: wc, basin etc.

Using the scale 1 square = 100mm

Scale: 1 square = 100mm

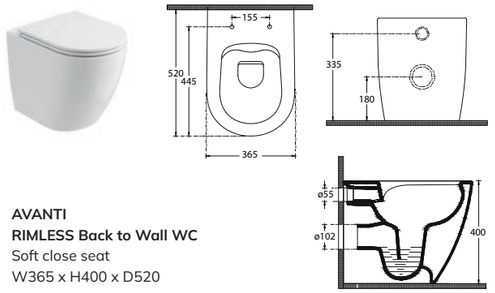

AVANTI
RIMLESS Back to Wall WC
Soft close seat
W365 x H400 x D520

Note:*this technical drawing applies to
all colours of back to wall wcs in the Avanti range

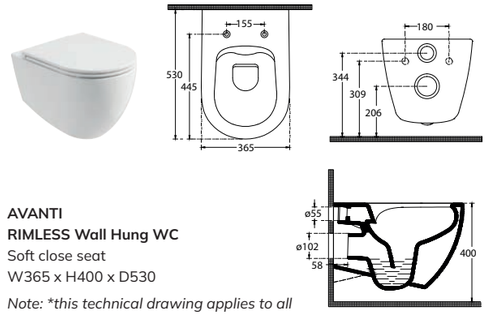

AVANTI
RIMLESS Wall Hung WC
Soft close seat
W365 x H400 x D530

*Note: *this technical drawing applies to all colours of wall hung wcs in the Avanti range*

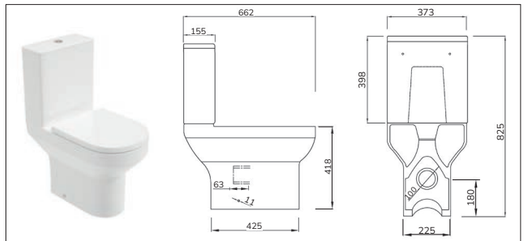

BASE
RIMLESS Open Back Close Coupled WC
WC, cistern & fittings, 4.5/3L push button
Soft close quick release seat
W373 x H825 x D662mm

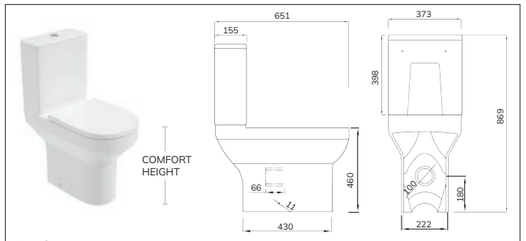

BASE
Comfort Height
RIMLESS Open Back Close Coupled WC
WC, cistern & fittings, 4.5/3L push button
Soft close quick release seat
W373 x **H869** x D651mm

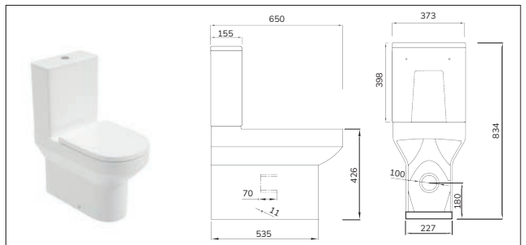

BASE
RIMLESS Fully Shrouded WC
WC, cistern & fittings, 4.5/3L push button
Soft close quick release seat
W373 x H834 x D650mm

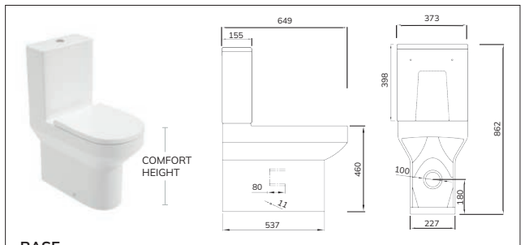

BASE
Comfort Height
RIMLESS Fully Shrouded WC
WC, cistern & fittings, 4.5/3L push button
Soft close quick release seat
W373 x **H862** x D649mm

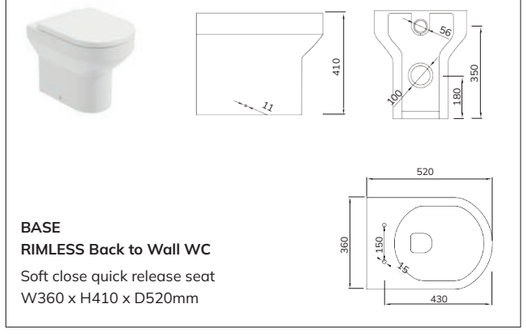

BASE
RIMLESS Back to Wall WC
Soft close quick release seat
W360 x H410 x D520mm

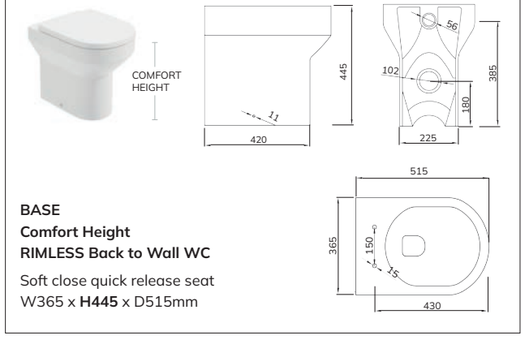

BASE
Comfort Height
RIMLESS Back to Wall WC
Soft close quick release seat
W365 x **H445** x D515mm

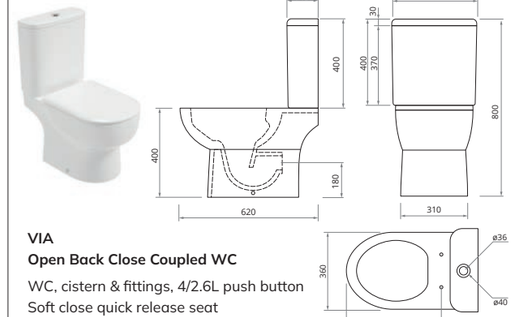

VIA
Open Back Close Coupled WC
WC, cistern & fittings, 4/2.6L push button
Soft close quick release seat
W395 x H800 x D620mm

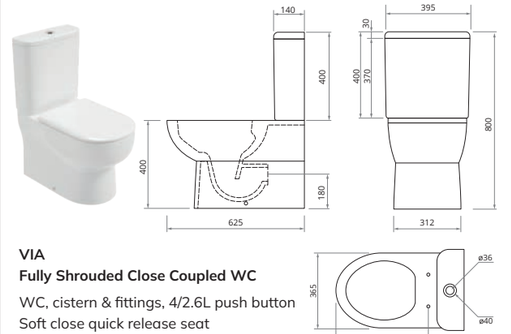

VIA
Fully Shrouded Close Coupled WC
WC, cistern & fittings, 4/2.6L push button
Soft close quick release seat
W395 x H800 x D625mm

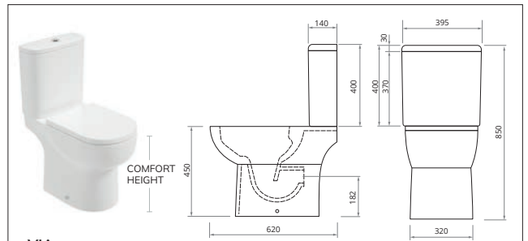

VIA
Comfort Height
Open Back Close Coupled WC
WC, cistern & fittings, 4/2.6L push button
Soft close quick release seat
W395 x **H850** x D620mm

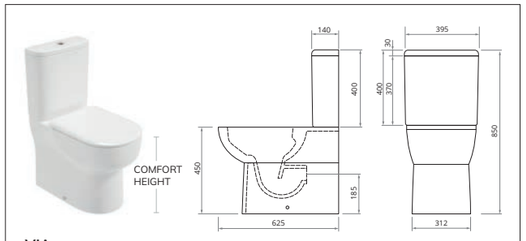

VIA
Comfort Height
Fully Shrouded Close Coupled WC
WC, cistern & fittings, 4/2.6L push button
Soft close quick release seat
W395 x **H850** x D625mm

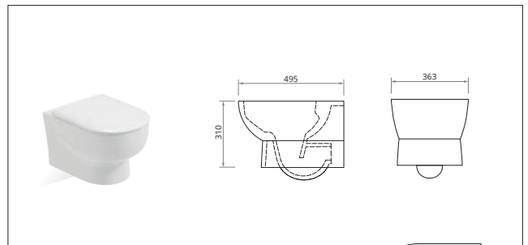

VIA
Wall Hung WC
Soft close quick release seat
W363 x H310 x D495mm

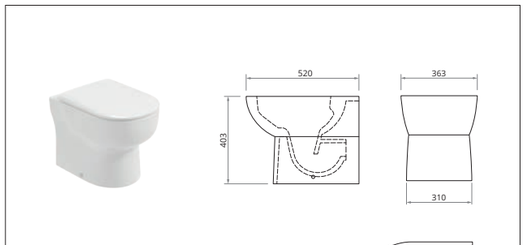

VIA
Back to Wall WC
Soft close quick release seat
W363 x H403 x D520mm

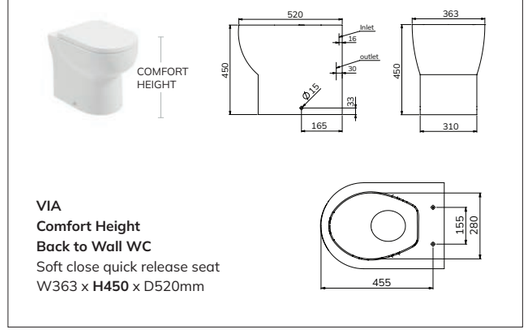

VIA
Comfort Height
Back to Wall WC
Soft close quick release seat
W363 x **H450** x D520mm

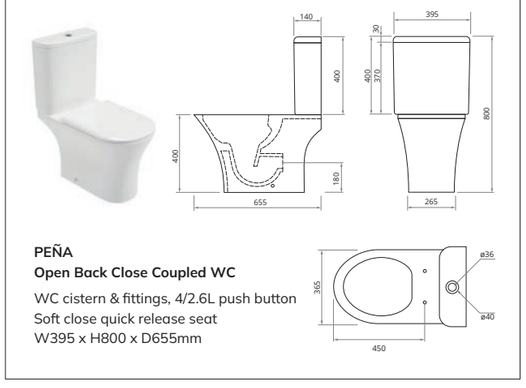

PEÑA
Open Back Close Coupled WC
WC cistern & fittings, 4/2.6L push button
Soft close quick release seat
W395 x H800 x D655mm

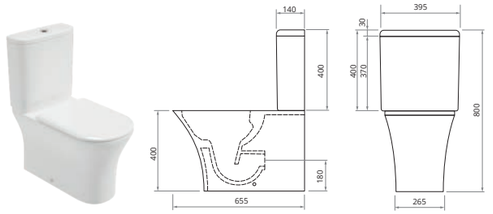

PEÑA
Fully Shrouded Close Coupled WC
WC cistern & fittings, 4/2.6L push button
Soft close quick release seat.
W395 x H800 x D655mm

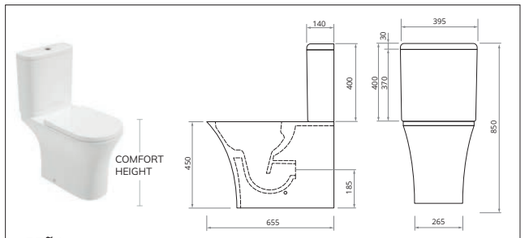

PEÑA
Comfort Height
Open Back Close Coupled WC
WC cistern & fittings, 4/2.6L push button
Soft close quick release seat.
W395 x **H850** x D655mm

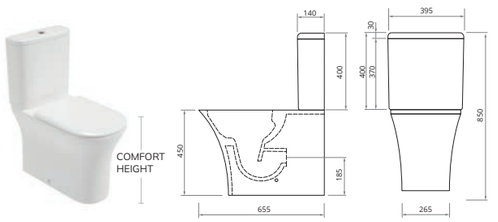

PEÑA
Comfort Height
Fully Shrouded Close Coupled WC
WC cistern & fittings, 4/2.6L push button
Soft close quick release seat.
W395 x **H850** x D655mm

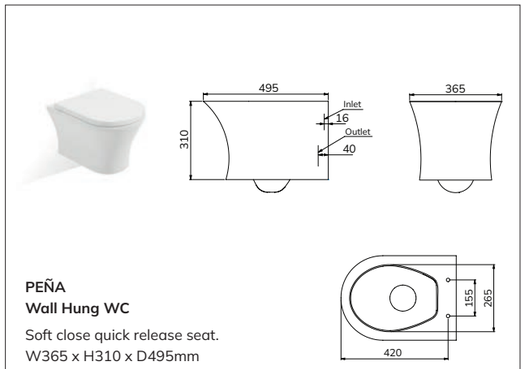

PEÑA
Wall Hung WC
Soft close quick release seat.
W365 x H310 x D495mm

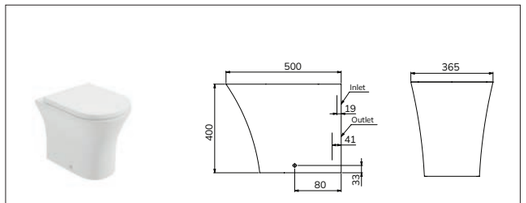

PEÑA
Back to Wall WC
Soft close quick release seat.
W365 x H400 x D500mm

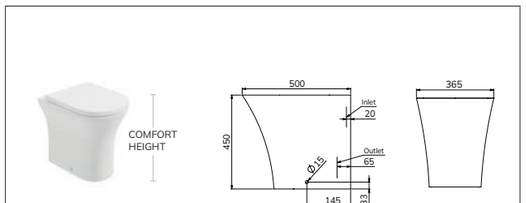

PEÑA
Comfort Height
Back to Wall WC
Soft close quick release seat.
W365 x **H450** x D500mm

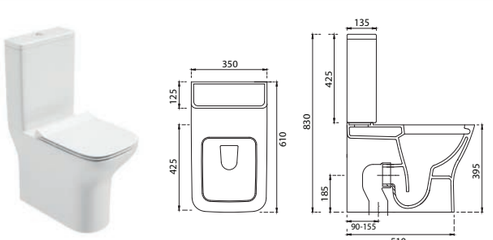

SOPHIA
RIMLESS Fully Shrouded Close Coupled WC
Wc, cistern & fittings, 4.5/3L push button
W350 x H830 x D610mm

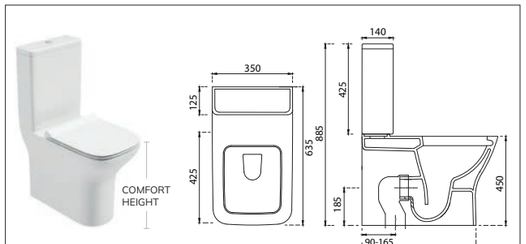

SOPHIA
Comfort Height
RIMLESS Fully Shrouded Close Ciupled WC
Wc cistern & fittings, 4.5/3L push button
W350 x **H885** x D635mm

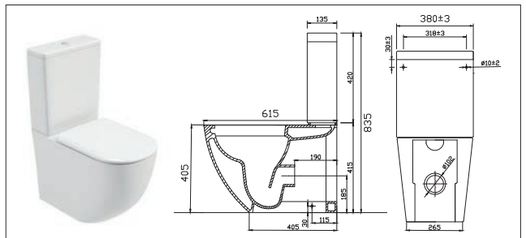

INSPIRE
RIMLESS Fully Shrouded WC
Wc cistern & fittings, 4.5/3L push button
W380 x H835 x D615mm

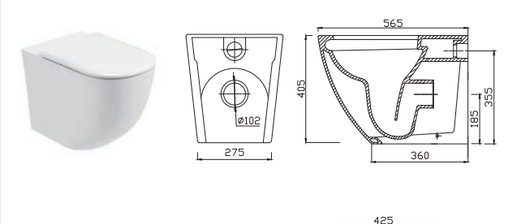

INSPIRE
RIMLESS Back to Wall WC
Soft close seat
W365 x H405 x D565mm

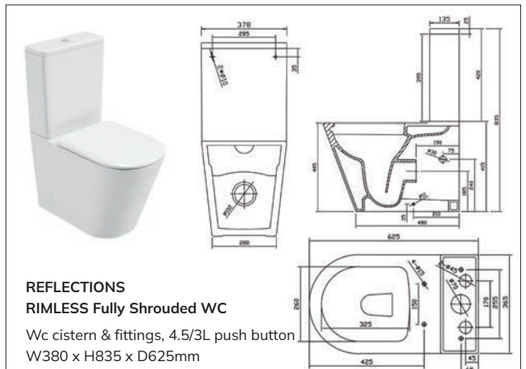

REFLECTIONS
RIMLESS Fully Shrouded WC
Wc cistern & fittings, 4.5/3L push button
W380 x H835 x D625mm

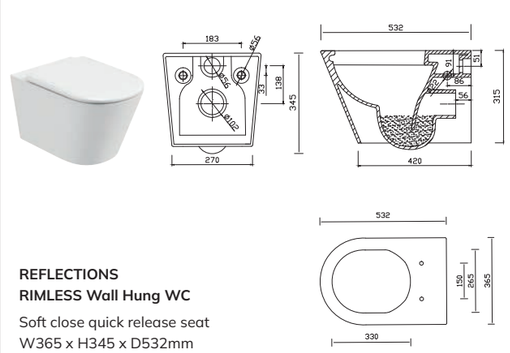

REFLECTIONS
RIMLESS Wall Hung WC
Soft close quick release seat
W365 x H345 x D532mm

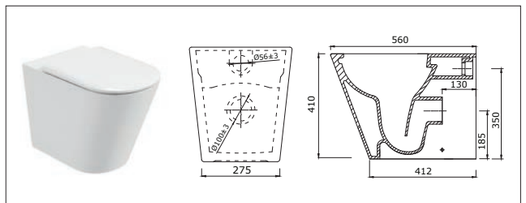

REFLECTIONS
RIMLESS Back to Wall WC
Soft close quick release seat
W363 x H410 x D560mm

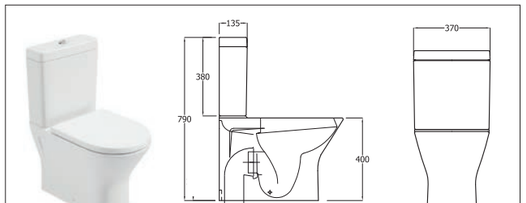

SCALA
RIMLESS Fully Shrouded
Close Coupled WC
Wc cistern & fittings, 6/4L push button
W370 x H790 x D600mm

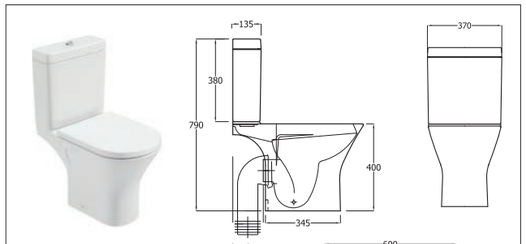

SCALA
RIMLESS Open Back Close Coupled WC
Wc, cistern & fittings, 6/4L push button
W370 x H790 x D600mm

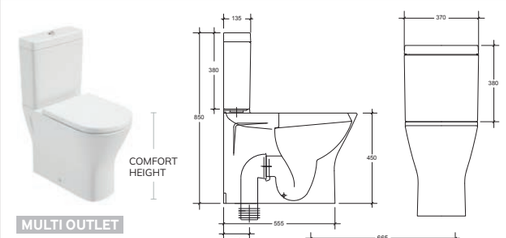

SCALA
Comfort height
RIMLESS Fully Shrouded WC
Wc, cistern & fittings, 6/4L push button
W370 x **H850** x D665mm

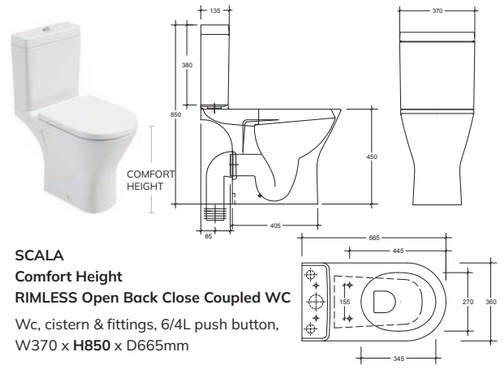

SCALA
Comfort Height
RIMLESS Open Back Close Coupled WC

Wc, cistern & fittings, 6/4L push button,
W370 x **H850** x D665mm

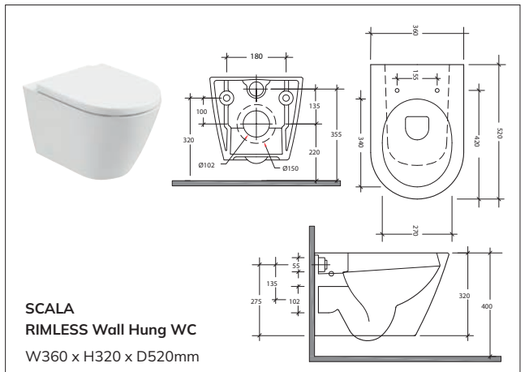

SCALA
RIMLESS Wall Hung WC

W360 x H320 x D520mm

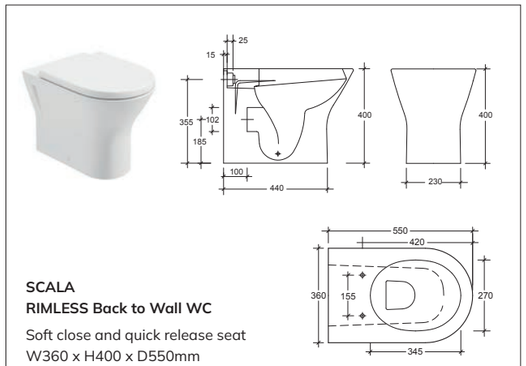

SCALA
RIMLESS Back to Wall WC

Soft close and quick release seat
W360 x H400 x D550mm

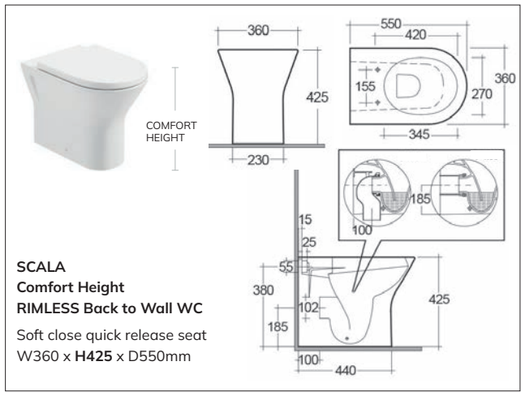

SCALA
Comfort Height
RIMLESS Back to Wall WC

Soft close quick release seat
W360 x **H425** x D550mm

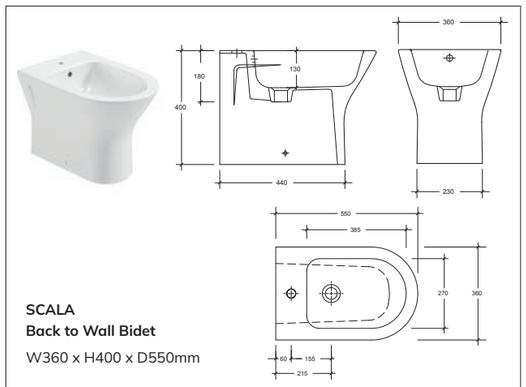

SCALA
Back to Wall Bidet

W360 x H400 x D550mm

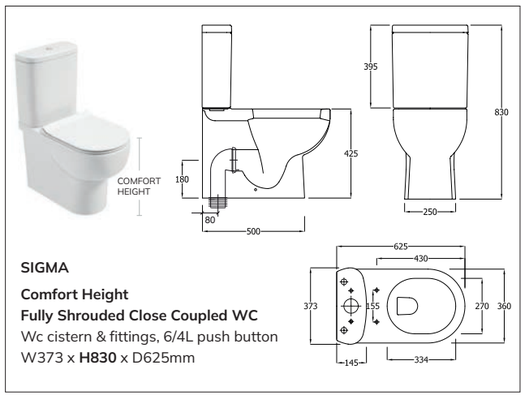

SIGMA
Comfort Height
Fully Shrouded Close Coupled WC

Wc cistern & fittings, 6/4L push button
W373 x **H830** x D625mm

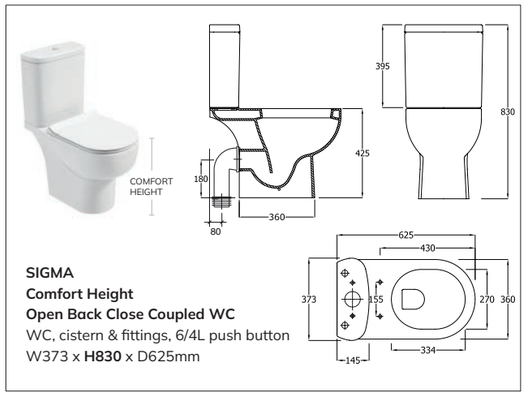

SIGMA
Comfort Height
Open Back Close Coupled WC

WC, cistern & fittings, 6/4L push button
W373 x **H830** x D625mm

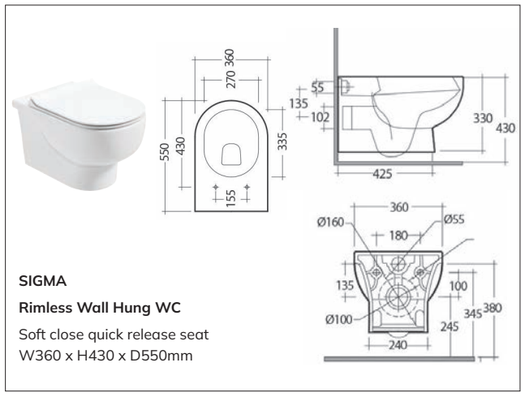

SIGMA
Rimless Wall Hung WC

Soft close quick release seat
W360 x H430 x D550mm

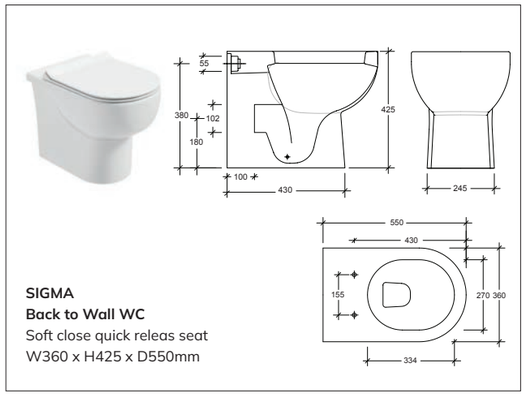

SIGMA
Back to Wall WC

Soft close quick releas seat
W360 x H425 x D550mm

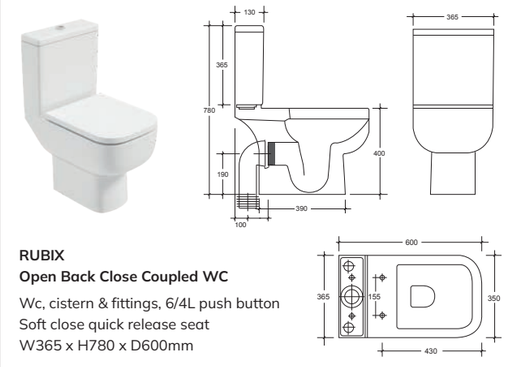

RUBIX
Open Back Close Coupled WC

Wc, cistern & fittings, 6/4L push button
Soft close quick release seat
W365 x H780 x D600mm

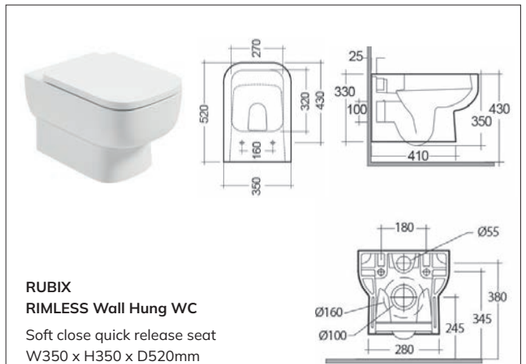

RUBIX
RIMLESS Wall Hung WC

Soft close quick release seat
W350 x H350 x D520mm

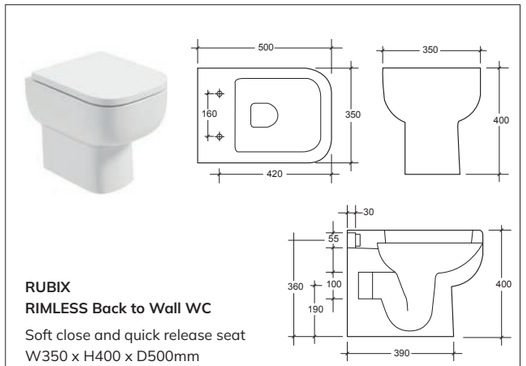

RUBIX
RIMLESS Back to Wall WC

Soft close and quick release seat
W350 x H400 x D500mm

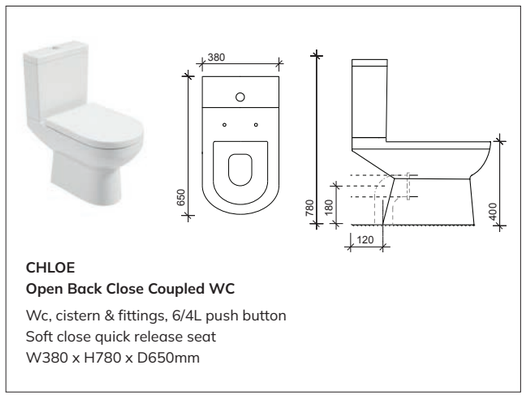

CHLOE
Open Back Close Coupled WC

Wc, cistern & fittings, 6/4L push button
Soft close quick release seat
W380 x H780 x D650mm

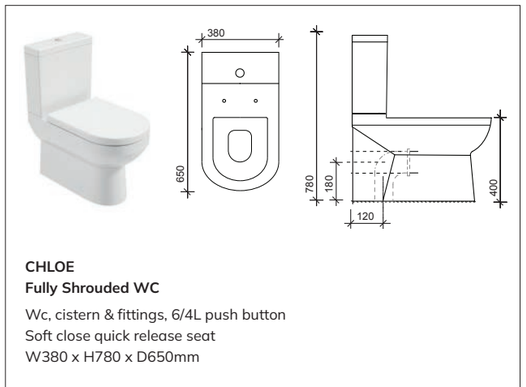

CHLOE
Fully Shrouded WC

Wc, cistern & fittings, 6/4L push button
Soft close quick release seat
W380 x H780 x D650mm

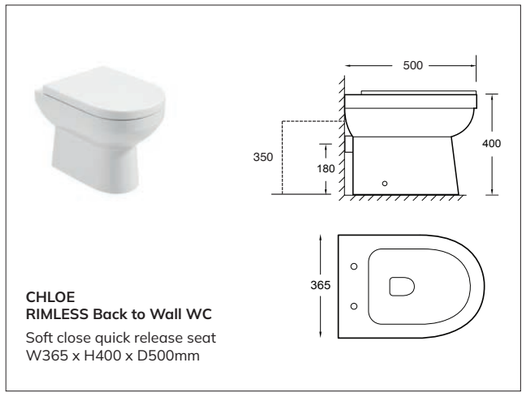

CHLOE
RIMLESS Back to Wall WC

Soft close quick release seat
W365 x H400 x D500mm

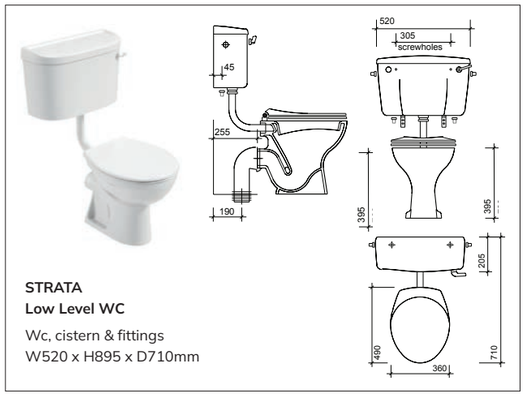

STRATA
Low Level WC

Wc, cistern & fittings
W520 x H895 x D710mm

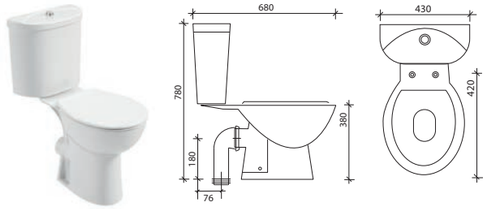

STRATA
Close Coupled WC

Wc, cistern & fittings, 6/4L push button
W430 x H780 x D680mm

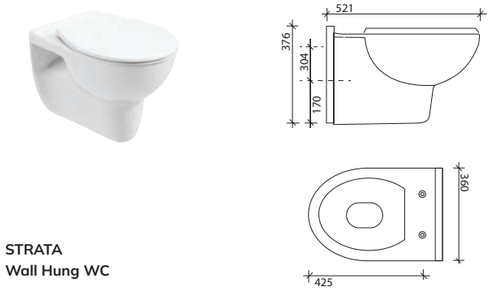

STRATA
Wall Hung WC

W360 x H376 x D521mm

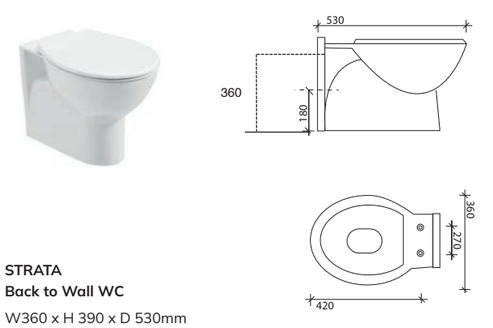

STRATA
Back to Wall WC

W360 x H 390 x D 530mm

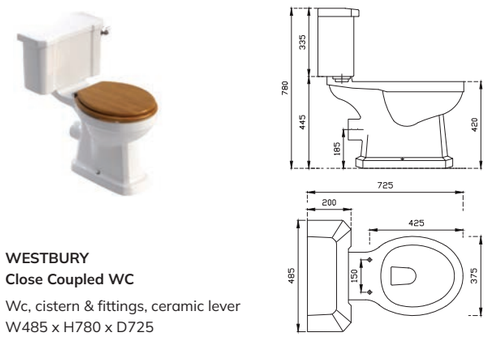

WESTBURY
Close Coupled WC

Wc, cistern & fittings, ceramic lever
W485 x H780 x D725

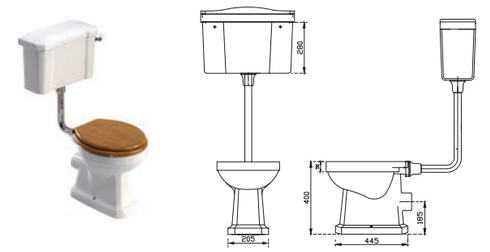

WESTBURY
Low Level WC

Wc, cistern & fittings, chrome flushpipe kit, ceramic lever
W493 x H1205 x D745mm

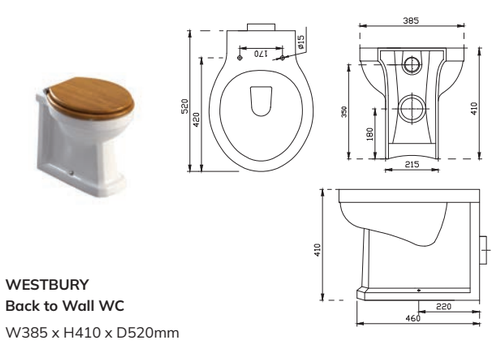

WESTBURY
Back to Wall WC

W385 x H410 x D520mm

WESTBURY
High Level WC

Wc, cistern & fittings
Chrome flushpipe kit, ceramic lever on chain
W493 x H2455-2495 x D655mm

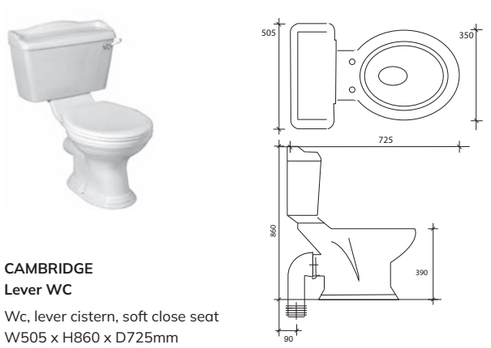

CAMBRIDGE
Lever WC

Wc, lever cistern, soft close seat
W505 x H860 x D725mm

Concealed Cistern for Back To Wall WCs

Includes pan connectors with front access, dual flush cistern and rectangular or circular flush plate [excluding wc pan]

W420 x H420 x D155 - 185mm

With Rectanglular Flush Plate

Chrome		USW0147
White		USW0148
Black		USW0149

With Circular Flush Plate

Chrome		USW0150
White		USW0151
Black		USW0152
Gold		USW0510
Nickel		USW0511

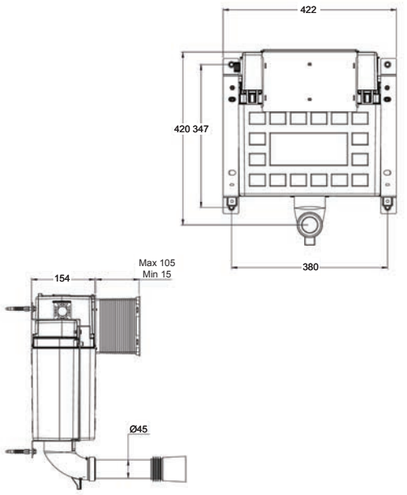

FASTFIX Frame for Wall Hung WCs

Includes pan connectors with top and front access, dual flush compact cistern and rectangular or circular flush plate [excluding wc pan]

W420 x H780-980 x D155-185mm

Install Fascia Plate to Top or Front

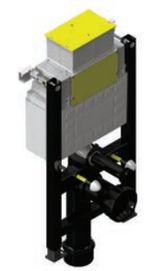

Install Fascia Plate To Top Or Front

With Rectanglular Flush Plate

Chrome		TO64113P43
White		TO64113P44
Black		TO64113P45

With Circular Flush Plate

Chrome		TO64113P47
White		TO64113P48
Black		TO64113P49
Gold		USW0506
Nickel		USW0507

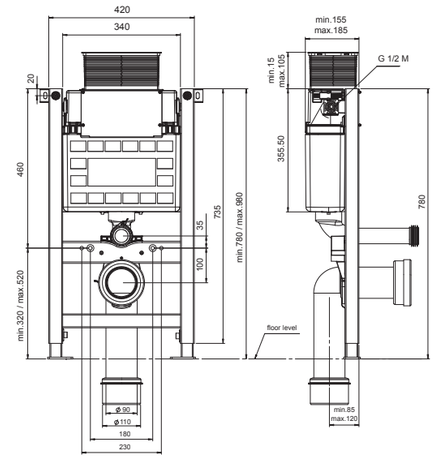

FASTFIX Frame for Wall Hung WCs

Includes pan connectors with front access,
dual flush cistern and rectangular or circular flush plate [excluding wc pan]

W350 x H1100-1300 x D150-180mm

Install Fascia Plate To Top Or Front

With Rectanglular Flush Plate

Chrome		TO74113P43
White		TO74113P44
Black		TO74113P45

With Circular Flush Plate

Chrome		TO74113P47
White		TO74113P48
Black		TO74113P49
Gold		USW0508
Nickel		USW0509

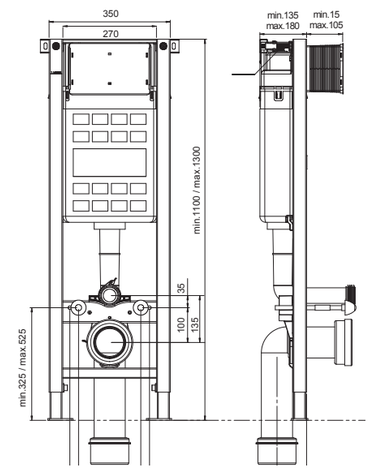

PRODUCT WARRANTIES

At SONAS Bathrooms our products have become the benchmark for others to follow. Our ranges are specifically tailored to meet the requirements of Homeowners, Installers and Trade Professionals. All our products are manufactured to appropriate industry standards and where required to the necessary EN standards. For your additional peace of mind, we fully support our product Warranties with our technical support and spare parts after sales service. In the event that you do encounter a problem with a SONAS product please contact us with the details of the fault and a proof of purchase from the SONAS dealer where the item was bought and we will do the rest. All after sales or technical queries can be emailed directly to customerservice@sonasbathrooms.com which will be answered by one of our in-house qualified plumbing advisors.

Ceramics
Lifetime – Ceramic Parts
2 Years – Toilet Seats
2 Years – Flushing Mechanism

Baths & Whirlpools
Lifetime – Freestanding and Plain
2 Years – Whirlpool Baths
5 Years – Steel Baths
5 Years – Colour Painted Finishes

Taps & Showers
15 Years – All Finishes
15 Years – On Cartridges and Flexi's (*)
5 Years – On all shower Cartridges
2 Years – On hoses, heads, wastes and consumables

Enclosures, Screens & Wet room panels
Lifetime – On Glass & Profiles
5 Years – Handles on doors
5 Years – Rollers
2 Years – Seals

Furniture
10 Years – Scandinavian range
5 Years - All Other Ranges
2 Years – Handles, Runners, Hinges

Heated Towel Warmers and Rads
10 Years – On all Radiators
10 Years – On all Rad Valves

Shower Trays
Lifetime – Acrylic Trays
5 Years - Slate and Eternity trays
2 Years – Traps and Covers

Accessories
15 years on the HAKK and ALITA ranges
10 years on all other ranges

Resin Products
5 Year Warranty

Mirrors
2 Year Warranty

The above Warranty applies to all replacement products and parts within the Warranty period, labour will be covered for a period of 2 Year.

(*) Cartridges and flexi hoses in the Hakk, Alita, Luta and Scope ranges are covered by 15-year warranty, 2 years on all other models.

Please note that above Warranty and extended warranties are applicable for goods installed in a domestic environment with reasonable usage. Any item installed in a public or commercial area will be subject to 1 Year Warranty. Faults must be reported within the respective Warranty period from proof of purchase date.

Warranties are limited to product defects and failures arising from the manufacturing process and does not apply to products that have been damaged as a result of transit, misuse or incorrect installation.

While all products are subject to quality control checks by the manufacturer, from time to time a product or batch of products may enter the market that does not meet the necessary quality standard. SONAS Bathrooms will replace any product with a visual defect or that is manufactured outside of the allowable tolerances according to EN standards, however; all products must be checked for these defects by the installer as SONAS Bathrooms will not be responsible for any refitting or refitting costs associated with replacing the product.

SONAS Bathrooms must be given reasonable opportunity to inspect the product in the installed situation, if removed the product must not be destroyed but should be retained for inspection. Photographic or video media of the product in the installed situation may be requested. Suitable access must be provided in order to reasonably and cost effectively allow for a product to be repaired or replaced under warranty. SONAS Bathrooms will not be responsible for reinstallation of products that are tiled in to areas without suitable access.

Cleaning & Maintenance

- All products should be cared for with a regular and suitable cleaning regime.
- The use of aggressive cleaning agents should be avoided and in particular on chrome, brass and aluminium surfaces a soft damp cloth and warm soapy water is sufficient.
- Suitable ventilation should be provided and in cases of bathroom furniture materials are water resistant but not water proof, therefore regular maintenance and the removal of excess water on or around the product is necessary to avoid damage.

Exclusions of Warranty

- Incorrect installation not in accordance with fitting instructions and best plumbing practice.
- Failure to care for and maintain product as per care & maintenance guidelines.
- Improper use of product not in accordance with the intended use and limitations of the product specifications.
- Wilful or negligent damage.
- Damage caused by specific environmental circumstances, excess or negative pressure in the line, insufficient operating pressure as per the product technical specifications, limescale or hard water, aggressive cleaning agents or chemicals.
- If excess water levels are found in vanity units.
- Scratches or defects reported post installation.
- Products that are fitted and then reported damaged.
- Ex display items.

Service Engineer Call Outs

- In cases where products fail under warranty, a replacement part, product or repair will be provided for the period of the Warranty as per the table above, in cases of labour to remedy faulty products, this will apply for a period of one year.
- If our onsite inspection determines the reported issue is not a manufacturing or materials defect, a call out charge of €100.00 & VAT may be applied.
- SONAS Bathrooms may choose at our own discretion to provide a directly employed engineer or appoint a suitably qualified contractor to replace or repair a faulty product.

All prices are recommended retail and include VAT The prices and specifications contained within this brochure are for information purposes only and as our products are continually updated they may be subject to change without prior notice. The images included are for general guidance only and are limited to the constraints of the printing process. MEASUREMENTS are in millimetres — unless otherwise stated.

NOTES

Real Bathrooms, in Real HOMES.

Let SONAS be part of your story.

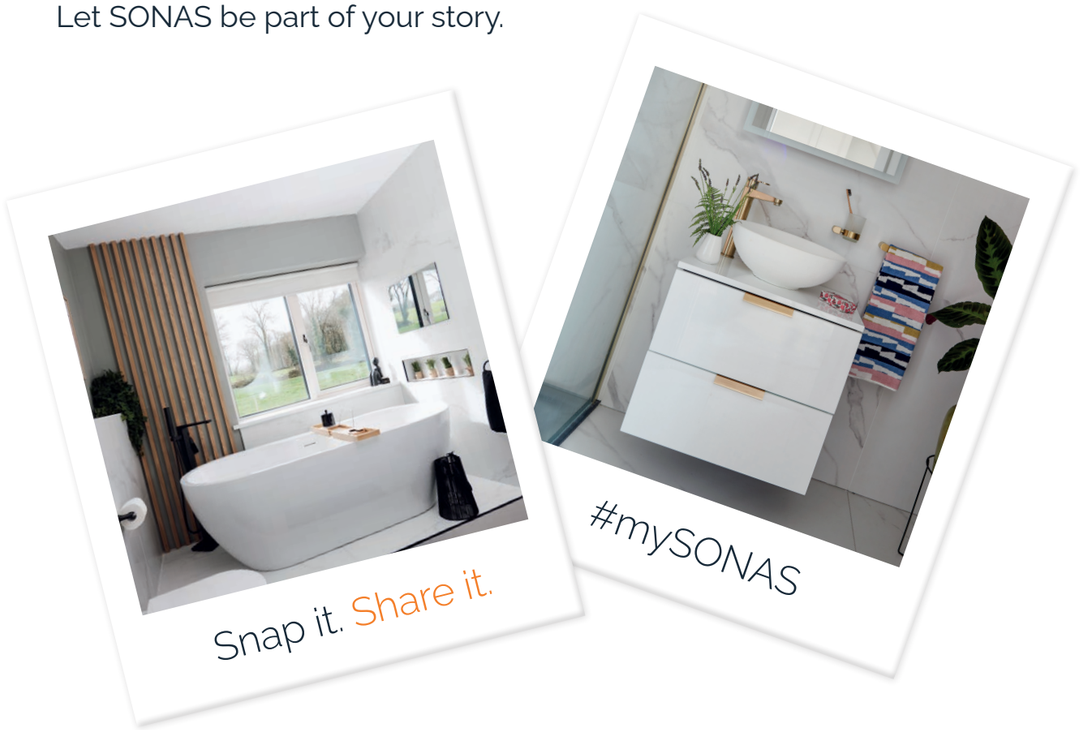

Imagine more for your bathroom

Take a picture of our products in your bathroom and share them with us through our social media channels.

Don't forget to add the hashtag #mySONAS

SONAS
BATHROOMS **REIMAGINED**

Follow US: @sonasbathrooms

SONAS
BATHROOMS **REIMAGINED**

VISIT OUR SHOWROOM

Scan For Directions

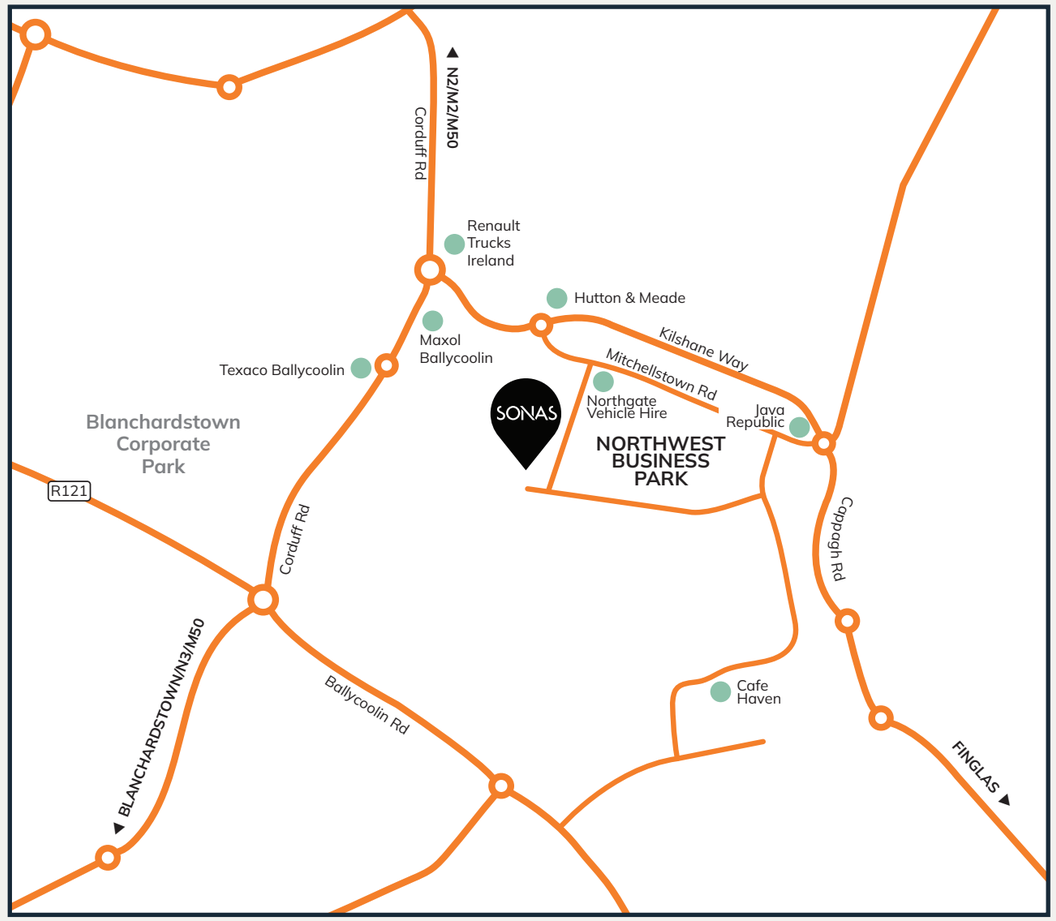

103 Northwest Business Park · Ballycoolin · Dublin 15 · D15 R883

103 Northwest Business Park
Ballycoolin
Dublin 15
D15 R883

TEL: +353 (01) 817 9755

SALES: info@sonasbathrooms.com

AFTERSALES: customerservice@sonasbathrooms.com

sonasbathrooms.com

Follow Us: @sonasbathrooms

Scan Code

To download a pdf version
of this brochure

Produced from pulp derived from wholly sustainable forestry, which is 'bleached' without the use of elemental chlorine (ECF) Printed on paper which is PEFC certified. Manufactured in a mill managed in accordance with International environmental standard ISO14001.*

**Programme for the Endorsement of Forest Certification (PEFC)*

WORLD LAND TRUST™

www.carbonbalancedpaper.com
CBP2264

PEFC Certified

This product is from sustainably managed forests and controlled sources

PEFC/16-33-533

www.pefc.co.uk

COVER - PLASTIC LAMINATE
Not Yet Recycled

INNER PAGES - PAPER
Widely Recycled

Please remove cover before placing inner pages in recycle bin.