heating collection

ISSUE 51 | MAY - SEPT 2026

Eastbrook

stylish warmth.

www.eastbrooktrade.com

New Heating Ranges, Sizes & Colours available!

CORTONA ELECTRIC

ROSANO HORIZONTAL

WENDOVER - STRAIGHT

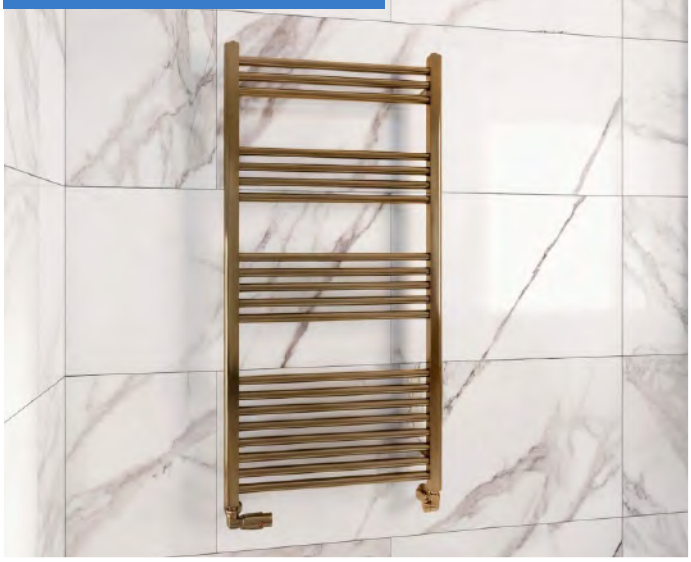

BIAVA MULTIRAIL HIDDEN VENT, STRAIGHT

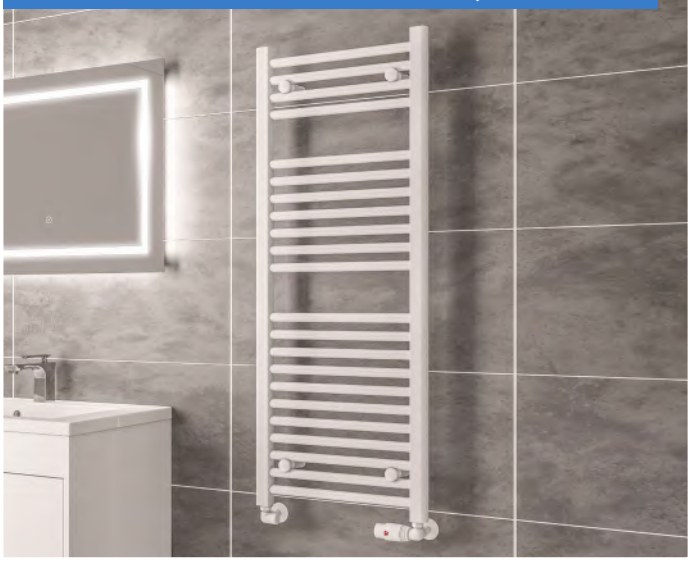

NEW ACCESSORIES

PEFC
PEFC/16-33-582

PEFC Certified

This product is from sustainably managed forests and controlled sources

www.pefc.org

RAL Colours / Codes

The RAL codes for the radiator and valve colours in the radiator section are as follows:

Gloss White* : RAL 9016
Matt White* : RAL 9016 Matt
Matt Grey* : RAL 7040 Matt
Matt Cappuccino* : Special Colour (Closest colour RAL 1019 Matt)
Matt Cobalt Blue* : RAL 5013 Matt
Matt Anthracite* : Special colour (Closest colour RAL 7016 Matt)
Matt Black* : RAL 9005 Matt

*Touch Up pens for above colours available, please ask sales/technical for more details.
*Eastbrook radiator colour swatch contains above colours & more colours, please don't forget to ask for your copy.

Correction Factors

Heat outputs are calculated at Delta T30 & T50.

To convert for your requirement, use the multiples from the provided table. (Based on Delta T50.

Delta ▲T	Multiple
25	0.404
30	0.513
35	0.627
40	0.747
45	0.871
50	1
60	1.268
65	1.406
70	1.548

We have tried to ensure that all price and product information is correct at the time of going to print. However, the specifications contained in this catalogue are for information purposes only and are subject to change. Due to our ongoing policy of product development and improvement, all prices, specifications and features are subject to change without prior notice. Errors and omissions excepted.

Heating Contents

P14 - 67	The **Multirail** Range	A **huge variety** of contemporary towel rails in a **wide variety of sizes and colours**
P68 - 79	The **All Electric** Range	Using **modern technology benefits**, the All Electric Range consists of **lighter towel rails** and **energy efficient daily usage**.
P80 - 89	The **Stainless Steel** Range	Whilst retaining the features of a ladder rail, the stainless steel range produces a **stylish contemporary look**.
P90 -175	The **Designer** Range	Our aim is to offer a **statement piece radiator** that allows maximum space to keep towels warm. In the designer range you can find a huge variety of towel rail styles and radiators using **minimalistic, clean designs.**
P176 -193	The **Compact Panel** Range	Offering a selection of approximately **200 sizes**, you can be confident in discovering the ideal solution for **efficient home heating** that perfectly matches your space.
P194 -275	The **Aluminium** Range	A huge variety of **contemporary aluminium radiators** and towel rails, from flat panel to ladder rail styles **to suit any room.**
P276 - 321	The **Traditional** Range	Our **traditional range** of radiators offer character and flair to ensure they fit in with your classic design. Most of these radiator can be **powered** via **dual fuel, single fuel and /or all electric.**
P324 - 337	**Elements**	A huge variety **elements** and **valves** to allow easy control of your radiators heat output , whilst **looking stylish**.
P338 - 353	**Valves**	**Complete the look with** coloured pipe shrouds and vent caps **to match your radiatorcolour.**
P354 - 357	**Accessories**	To **add extra functionality**, **towel hangers & robe hooks** make daily life easy when warming towels.
P358 - 435	**Technical Tables**	
P2 - 13	**Visual Contents**	

RAL Colours / Codes **The RAL codes for the radiator and valve colours in the radiator section are as follows:**

Gloss White* : RAL 9016
Matt White* : RAL 9016 Matt
Matt Grey* : RAL 7040 Matt

Matt Cappuccino* : Special Colour (Closest colour RAL 1019 Matt)
Matt Cobalt Blue* : RAL 5013 Matt
Matt Anthracite* : Special colour (Closest colour RAL 7016 Matt)

Matt Black* : RAL 9005 Matt

*Touch Up pens for above colours available, please ask sales/technical for more details.
*Eastbrook radiator colour swatch contains these colours, please don't forget to ask for your copy.

Towel Rails & Radiators

MULTIRAIL RANGE P14-67

Wendover Straight Chrome
P16-17

Wendover Straight Gloss White
P20

Wendover Curved
P18-19 & 21

Wendover Straight
Matt Anthracite P22-23

Wendover Straight Matt Black
P24-25

Wendover Straight
Brushed Brass P26-27

Wendover Straight
PVD Finishes P28-29

Wendover Straight
PVD Finishes P28-29

Please ask your local showroom or installer for a radiator colour swatch to match your preferred colour.

Biava Multirail HV Straight
P30-33

Wingrave Straight Chrome
P34-35

Wingrave Straight Gloss White
P36-37

Wingrave Straight Matt White
P38-39

Wingrave Straight Matt
Anthracite P40-41

Wingrave Straight Matt Black
P42-43

Wingrave Straight Matt Grey
P44

Wingrave Straight Matt Cobalt
Blue P45

Towel Rails & Radiators

MULTIRAIL RANGE P14-67

Wingrave Curved
P46-47

Biava Multirail Straight
P48

Biava Multirail Curved
P49

Westward Straight
P50-51

Rion Multirail
P52-53

Tuscan Gloss White & Chrome
P54

Biava Round
P55

Corinium Round
P56-57

Please ask your local showroom or installer for a radiator colour swatch to match your preferred colour.

Tuscan Round
P58-59

Biava Tube On Tube Chrome
P60

Biava Square
P61

Tuscan Square Multirail
P62-63

Tuscan Square
P64-65

Launton
P66

Haddenham
P67

RADIATOR KEY
Directional Size Availability

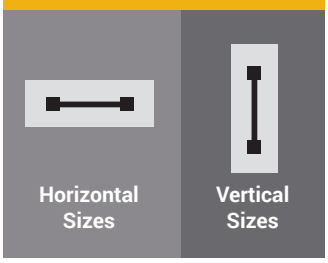

Towel Rails & Radiators

ALL ELECTRIC RANGE P68-79

Cortona Electric
P70-71

Cortona Electric
P70-71

Derwent Aluminium Dry Element
P72-73

Biava Dry Element Straight
P74-75

Biava Dry Element Straight
P74-75

Loddon Dry Element
P76-77

Brockworth All Electric
P78

Kennet Dry Element
P79

STAINLESS STEEL RANGE P80-89

Wendover Straight Polished
P82-83

Wendover Straight Brushed
P84-85

Violla II Polished
P86

Violla II Brushed
P87

Rizano Polished
P88

Velino Polished
P89

Velino Brushed
P89

RADIATOR KEY
Directional Size Availability

Horizontal Sizes

Vertical Sizes

Towel Rails & Radiators

DESIGNER RANGE P90-175

Warrington Type 10 Horizontal
P92

Warrington Type 10 Vertical
P93-95

Warrington Type 20 Horizontal
P96

Warrington Type 20 Vertical
P97-99

Warrington Type 20 Vertical
P97-99

Warrington Type 20 Vertical
P97-99

Leonardo
P100-101

Staverton Tube On Tube Straight
P102

Please ask your local showroom or installer for a radiator colour swatch to match your preferred colour.

Staverton Tube On Tube Curved
P103

Defford
P104-105

Staverton
P106-107

Santero
P108-109

Hurley Towel Rail
P110-113

Hurley Towel Rail
P110-113

Hurley Towel Rail
P110-113

Helmsley Towel Rail
P114-115

Towel Rails & Radiators

DESIGNER RANGE P90-175

Platani
P116-117

Reinbach
P118-119

Marlow
P120-121

Marlow E-Style
P122-123

Conwy
P124

Portchester
P125

Murano Vertical
P126

Murano Horizontal
P127

Please ask your local showroom or installer for a radiator colour swatch.

Ryton Towel Rail
P128

Kenilworth Towel Rail
P129

Loxley Towel Rail
P130

Eshton Towel Rail
P131

Rubano Vertical & Horizontal
P132-133

Rowsham Vertical & Horizontal
P134-136

Rowsham Towel Rail
P137

Wingrave Flat Panel
P138-139

Towel Rails & Radiators

DESIGNER RANGE P90-175

Tunstall Vertical
P140-141

Tunstall Horizontal
P142

Tunstall Towel Rail
P143

Tunstall Double Vertical
P144-145

Tunstall Double Horizontal
P146-147

Tunstall Double Towel Rail
P148

Tunstall Mirror
P149

Tunstall Double Mirror
P149

Please ask your local showroom or installer for a radiator colour swatch.

Deddington Vertical
P150-151

Deddington Horizontal
P152-153

Deddington Towel Rail
P154-155

RADIATOR KEY
Directional Size Availability

Horizontal Sizes

Vertical Sizes

Addington II Type 10 Vertical & Horizontal P156-163

Addington II Type 20 Vertical & Horizontal P166-171

Addington II Type 10 Towel Rail
P172-174

Addington II Type 20 Towel Rail
P175

Towel Rails & Radiators

COMPACT PANEL RANGE P176-193

Longbridge Type 22 Compact Panel
P178-179

RADIATOR KEY
Directional Size Availability

Horizontal Sizes

Vertical Sizes

Longbridge Type 22 Compact Panel
P178-179

Radiator Valves
Page 338-353

Please ask your local showroom or installer for a radiator colour swatch.

Longden Type 11 Compact Panel
P180

Longden Type 21 Compact Panel
P181

Longden Type 22 Compact Panel
P182-183

Longden Type 11, 21 & 22 Compact Panel Matt Anthracite
P184

Longden Type 11, 21 & 22 Compact Panel Matt Black P185

Type 22 Keynsham Radiator Flat Cover P188

Type 22 Keynsham Radiator Lined Cover P189

Cover Plates - Flat & Lined
P190-191

Towel Rails & Radiators

ALUMINIUM RANGE P194-275

Rosano Vertical
P196-197

Rosano Horizontal
P198-199

Peretti Vertical
P202-203

Peretti Horizontal
P204-205

Kingswood Slimline Vertical & Horizontal P208-209

Kingswood Slimline Towel Rail
P210-211

Queenswood Vertical
P212-213

Queenswood Horizontal
P214-215

Please ask your local showroom or installer for a radiator colour swatch.

Mersey Vertical
P216-217

Trent Vertical
P218-219

Addington Aluminium Type 10
P220-223

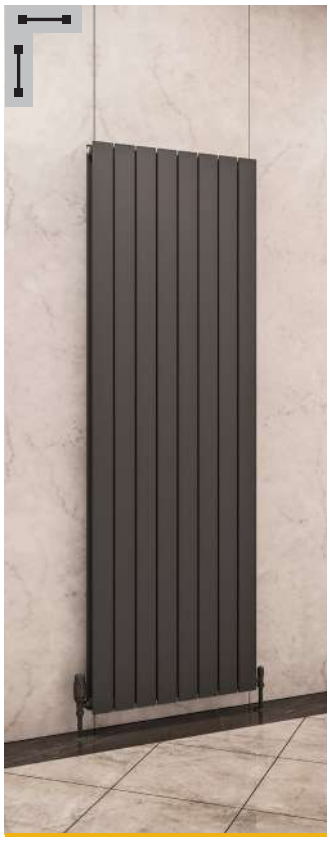

Addington Aluminium Type 20
P224-227

Towel Rails & Radiators

ALUMINIUM RANGE P194-275

Charlton Vertical
P228-229

Charlton Horizontal
P230-231

Withington Vertical
P234-235

Withington Horizontal
P23-237

Malmesbury Vertical
P240-243

Malmesbury Horizontal
P244

Berkeley Horizontal
P246-247

RADIATOR KEY
Directional Size Availability

Horizontal Sizes

Vertical Sizes

Please ask your local showroom or installer for a radiator colour swatch.

Tordino Vertical
P248-249

Tordino Horizontal
P250

Guardia Vertical
P252-253

Guardia Horizontal
P254-255

Hadleigh Vertical
P256-257

Hadleigh Horizontal
P258-259

Vesima Vertical
P260-261

Vesima Horizontal
P262-263

Towel Rails & Radiators

ALUMINIUM RANGE P194-275

Preston Vertical
P264-265

Berlini Vertical
P266-267

Fairford Vertical
P268

Fairford Horizontal
P269

Burford Vertical
P270

Burford Horizontal
P271

Kelmscott Vertical & Horizontal
P272-273

Witney Vertical & Horizontal
P274-275

TRADITIONAL RANGE P276-321

Windrush
P278

Stour
P279-281

Stour
P279-281

Stour
P279-281

Thames
P282

Leadon
P283

Coln
P284

Towel Rails & Radiators

TRADITIONAL RANGE P276-321

Twyver
P285

Avon
P286-287

Isbourne
P288-289

Isbourne
P288-289

Imperia 2 Column
P290-296

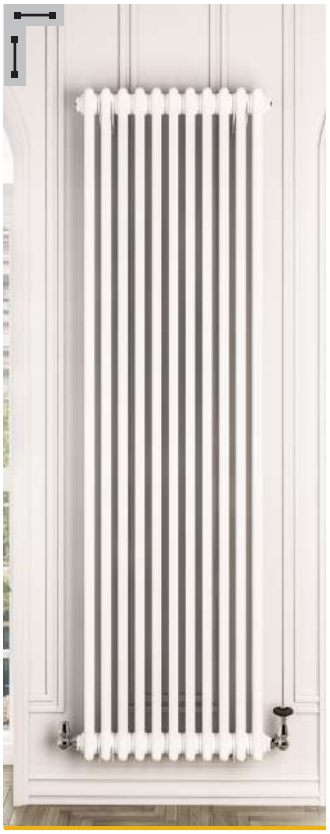

Imperia 3 Column
P297-303

Imperia 4 Column
P304-305

Imperia 6 Column
P306-308

Imperia 6 Column Bench
P309

RADIATOR KEY
Directional Size Availability

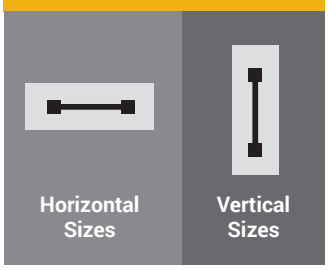

Towel Rails & Radiators

TRADITIONAL RANGE P276-321

Imperia 2 Column Bare Metal
P296

Imperia Multirail 2 Column
P310-311

Rivassa 2 Column
P312-315

Rivassa 3 Column
P316-319

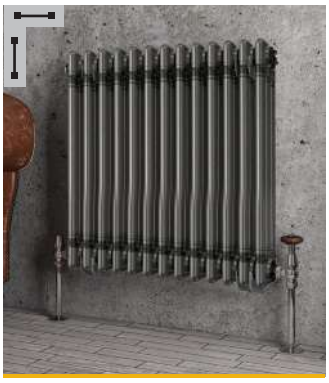

Imperia 3 Column Bare Metal
P297

Rivassa 4 Column
P320-321

ACCESSORIES P322-357

Elements
P324-337

Radiator Valves
P338-353

Multirail Towel Hangers
P355-356

Radiator Robe Hooks
P355

Pipe Shrouds - Slide On
P354

Pipe Shrouds - Clip On
P355

Radiator Vent Caps
P357

RADIATOR KEY
Directional Size Availability

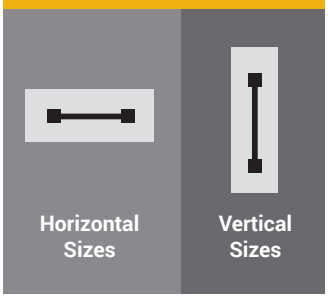

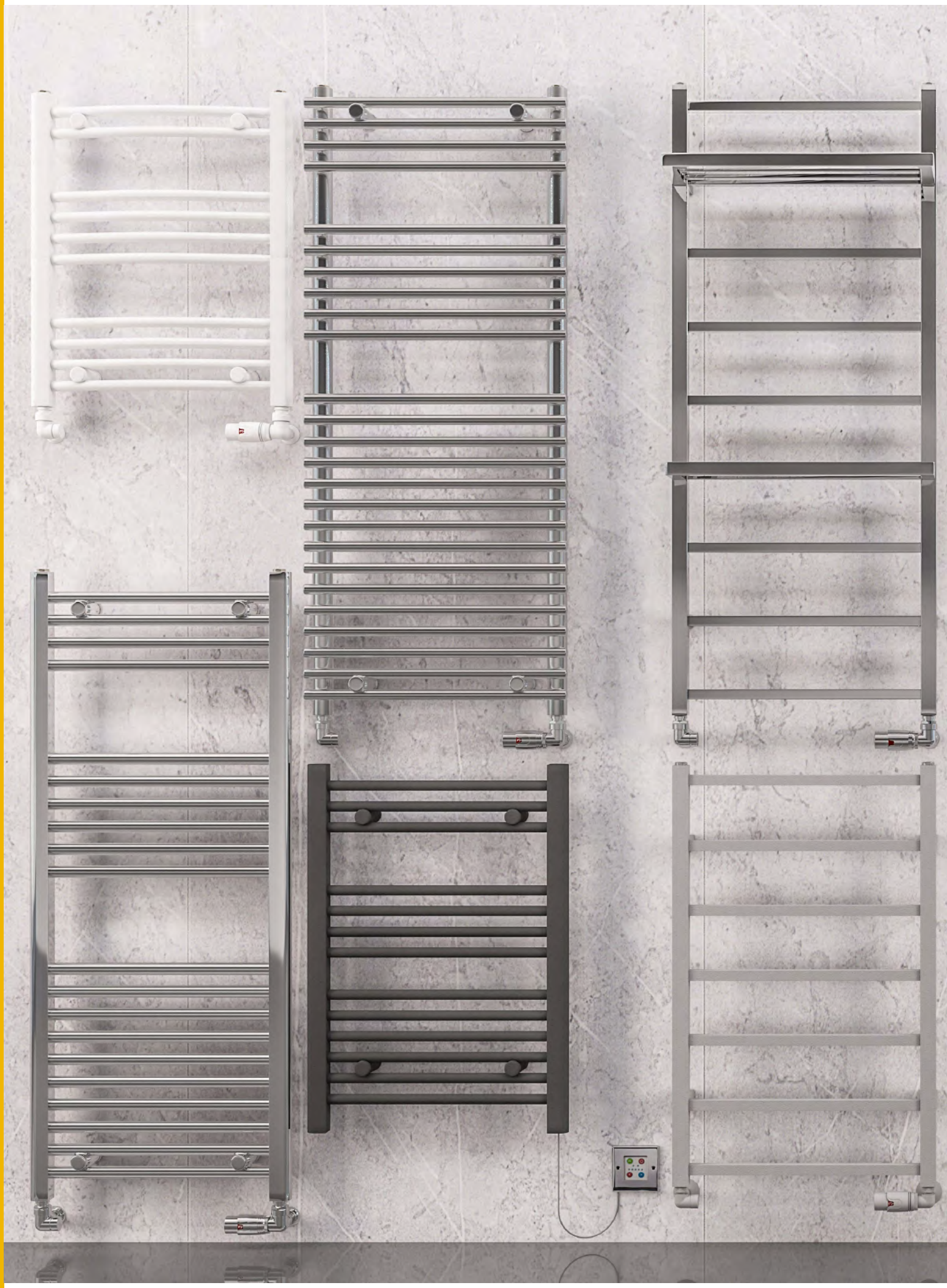

Multirail Range

Contents

Wendover Straight, Chrome	16-17
Wendover Curved, Chrome	18-19
Wendover Straight, Gloss White	20
Wendover Curved, Gloss White	21
Wendover Straight, Matt Anthracite	22-23
Wendover Straight, Matt Black	24-25
Wendover Straight, Brushed Brass	26-27
Wendover Straight, PVD Finishes - **NEW COLOUR**	28-29
Biava Multirail HV Straight, Available in 5 colours	30-33
Wingrave Straight, Chrome	34-35
Wingrave Straight, Gloss White	36-37
Wingrave Straight, Matt White	38-39
Wingrave Straight, Matt Anthracite	40-41
Wingrave Straight, Matt Black	42-43
Wingrave Straight, Matt Grey	44
Wingrave Straight, Matt Cobalt Blue	45
Wingrave Curved, Chrome	46
Wingrave Curved, Gloss White	47
Biava Multirail Straight, Gloss White	48
Biava Multirail Straight, Chrome	48
Biava Multirail Curved, Gloss White	49
Biava Multirail Curved, Chrome	49
Westward Straight, Gloss White & Chrome	50-51
Rion Multirail, Available in 4 colours	52-53
Tuscan, Gloss White & Chrome	54
Biava Round, Gloss White & Chrome	55
Corinium Round, Available in 5 colours	56-57
Tuscan Round, Available in 5 colours	58-59
Biava Tube on Tube, Chrome	60
Biava Square, Chrome	61
Tuscan Square Multirail, Available in 4 colours	62-63
Tuscan Square, Available in 5 colours	64-65
Launton, Available in 3 colours	66
Haddenham, Available in 3 colours	67

Multirail Range

WENDOVER - STRAIGHT, CHROME

Pictured 41.0245 Chrome

Pictured 41.0015 Chrome

A modern ladder towel rail, available in a vast array of sizes which is ideal for bathrooms. Wendover Straight range is available in chrome, brushed brass, gloss white, matt anthracite, matt black, black gold, brushed gunmetal and brushed bronze along with matching radiator valves and pipe shrouds.

FEATURES

- 22mm diameter horizontal round tubes
- Tested to BS EN 442 standards
- 5 Year manufacturer's warranty*
- Can be single or dual fuel, or all electric

* With conditions

Warranty 5 Year | Diameter (Ø) 22 MM Bars | Heating | All Electric | Dual-Fuel

Wendover - Straight Chrome 360mm Height

Width	Delta △T30 Watts	Delta △T30 BTU	Delta △T50 Watts	Delta △T50 BTU	Element Output	Element Type	Code	£ Ex VAT	£ Inc VAT
400mm	54	185	104	355	100W	B	41.0267	74.00	**88.80**

Wendover - Straight Chrome 600mm Height

Width	Delta △T30 Watts	Delta △T30 BTU	Delta △T50 Watts	Delta △T50 BTU	Element Output	Element Type	Code	£ Ex VAT	£ Inc VAT
300mm	67	229	128	437	100W	A, A+, B, D, E, F, G	41.0085	92.00	**110.40**
400mm	83	284	156	532	100W	A, A+, B, D, E, F, G	41.0082	100.00	**120.00**
500mm	98	335	185	631	100W	A, A+, B, D, E, F, G	41.0083	107.00	**128.40**
600mm	113	386	213	727	150W	A, A+, B, D, E, F, G	41.0084	116.00	**139.20**
750mm	134	457	258	880	150W	A, A+, B, D, E, F, G	41.0076	131.00	**157.20**
1000mm	173	590	327	1116	150W	A, A+, B, D, E, F, G	41.0244	195.00	**234.00**
1200mm	212	723	392	1337	150W	A, A+, B, D, E, F, G	41.0245	217.00	**260.40**

Radiator Valves
Page 338-353

360mm High

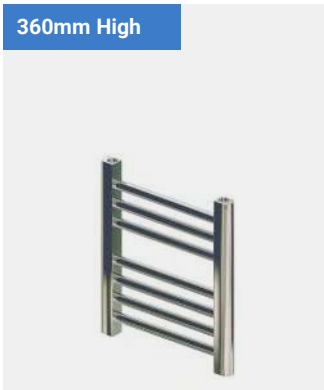

600mm High

Multirail Range

WENDOVER - STRAIGHT, CHROME

Wendover - Straight Chrome 800mm Height

Width	Delta △T30 Watts	Delta △T30 BTU	Delta △T50 Watts	Delta △T50 BTU	Element Output	Element Type	Code	£ Ex VAT	£ Inc VAT
300mm	73	249	139	474	100W	A, A+, B, D, E, F, G	41.0086	112.00	**134.40**
400mm	91	311	173	590	150W	A, A+, B, D, E, F, G	41.0001	119.00	**142.80**
500mm	109	372	208	710	150W	A, A+, B, D, E, F, G	41.0003	128.00	**153.60**
600mm	124	423	238	812	150W	A, A+, B, D, E, F, G	41.0005	136.00	**163.20**
750mm	173	590	327	1116	150W	A, A+, B, D, E, F, G	41.0077	166.00	**199.20**

Wendover - Straight Chrome 1400mm Height

Width	Delta △T30 Watts	Delta △T30 BTU	Delta △T50 Watts	Delta △T50 BTU	Element Output	Element Type	Code	£ Ex VAT	£ Inc VAT
300mm	128	437	249	850	100W	A, A+, B, D, E, F, G	41.0620	173.00	**207.60**
400mm	160	546	311	1061	150W	A, A+, B, D, E, F, G	41.0621	181.00	**217.20**
500mm	190	648	369	1259	150W	A, A+, B, D, E, F, G	41.0622	193.00	**231.60**
600mm	219	747	424	1446	150W	A, A+, B, D, E, F, G	41.0623	209.00	**250.80**
750mm	260	887	504	1719	150W	A, A+, B, D, E, F, G	41.0624	275.00	**330.00**

Wendover - Straight Chrome 1000mm Height

Width	Delta △T30 Watts	Delta △T30 BTU	Delta △T50 Watts	Delta △T50 BTU	Element Output	Element Type	Code	£ Ex VAT	£ Inc VAT
300mm	103	352	198	676	150W	A, A+, B, D, E, F, G	41.0087	130.00	**156.00**
400mm	113*	386*	216*	737*	150W	A, A+, B, D, E, F, G	41.0007	136.00	**163.20**
500mm	132	451	256	873	150W	A, A+, B, D, E, F, G	41.0009	146.00	**175.20**
600mm	154	526	298	1017	150W	A, A+, B, D, E, F, G	41.0011	156.00	**187.20**
750mm	208	710	396	1351	300W	A, A+, B, D, E, F, G	41.0078	191.00	**229.20**

Wendover - Straight Chrome 1600mm Height

Width	Delta △T30 Watts	Delta △T30 BTU	Delta △T50 Watts	Delta △T50 BTU	Element Output	Element Type	Code	£ Ex VAT	£ Inc VAT
300mm	155	529	303	1034	150W	A, A+, B, D, E, F, G	41.0089	187.00	**224.40**
400mm	186	635	363	1238	150W	A, A+, B, D, E, F, G	41.0019	195.00	**234.00**
500mm	220	751	431	1470	150W	A, A+, B, D, E, F, G	41.0021	213.00	**255.60**
600mm	240	819	453	1545	150W	A, A+, B, D, E, F, G	41.0023	231.00	**277.20**
750mm	324	1105	632	2156	300W	A, A+, B, D, E, F, G	41.0080	287.00	**344.40**

Wendover - Straight Chrome 1200mm Height

Width	Delta △T30 Watts	Delta △T30 BTU	Delta △T50 Watts	Delta △T50 BTU	Element Output	Element Type	Code	£ Ex VAT	£ Inc VAT
300mm	109	372	210	717	150W	A, A+, B, D, E, F, G	41.0088	153.00	**183.60**
400mm	136	464	262	894	150W	A, A+, B, D, E, F, G	41.0013	156.00	**187.20**
500mm	161	550	311	1061	150W	A, A+, B, D, E, F, G	41.0015	168.00	**201.60**
600mm	205*	700*	393*	1341*	300W	A, A+, B, D, E, F, G	41.0017	185.00	**222.00**
750mm	247	843	473	1613	300W	A, A+, B, D, E, F, G	41.0079	228.00	**273.60**

Wendover - Straight Chrome 1800mm Height

Width	Delta △T30 Watts	Delta △T30 BTU	Delta △T50 Watts	Delta △T50 BTU	Element Output	Element Type	Code	£ Ex VAT	£ Inc VAT
300mm	181	618	353	1204	150W	A, A+, B, D, E, F, G	41.0090	207.00	**248.40**
400mm	222	758	431	1470	150W	A, A+, B, D, E, F, G	41.0025	217.00	**260.40**
500mm	262	894	510	1740	150W	A, A+, B, D, E, F, G	41.0027	240.00	**288.00**
600mm	304	1037	576	1965	300W	A, A+, B, D, E, F, G	41.0029	259.00	**310.80**
750mm	370	1262	702	2394	300W	A, A+, B, D, E, F, G	41.0081	321.00	**385.20**

* Further heat output information available on eastbrooktrade.com **E&OA**

Round Vent Caps
Page 357

Robe Hooks
Page 355

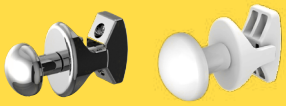

Towel Hangers
Page 355-356

Multi-Rail Hangers
Page 355-356

TECHNICAL INFORMATION

All measurements in Height by Width. Radiators that are electric only are restricted to the heat output of the elements. Element size can be increased to full capacity of rail if using element type B, D, E, F or G. For element types see pages 324-337. For matching valves see pages 338-353. For indirect heating systems only. Tappings are approx. 50mm less than the width of the rail and approx. 75-95mm off the wall. Projection from wall 90-110mm. Price includes radiator and wall fixing sets, valves extra.

Technical Tables & Drawings
Page 360-361

800mm High

1000mm High

1200mm High

1400mm High

1600mm High

1800mm High

Multirail Range

WENDOVER - CURVED, CHROME

Pictured 41.0035 Chrome

Pictured 41.0051 Chrome

A modern ladder towel rail, with a range of sizes available, from 600 x 400mm to 1800 x 750mm. Wendover Curved Multirail is available in chrome and gloss white finishes.

FEATURES
- 22mm diameter horizontal round tubes
- Tested to BS EN 442 standards
- 5 Year manufacturer's warranty*
- Can be single or dual fuel, or all electric

* With conditions

Technical Tables & Drawings
Page 361

Warranty 5 Year | Diameter (Ø) 22 MM Bars | Heating | All Electric | Dual-Fuel

600mm High

800mm High

Multirail Range

WENDOVER - CURVED, CHROME

Wendover - Curved Chrome 600mm Height

Width	Delta △T30 Watts	Delta △T30 BTU	Delta △T50 Watts	Delta △T50 BTU	Element Output	Element Type	Code	£ Ex VAT	£ Inc VAT
400mm	79*	270*	153	522	100W	A, A+, B, D, E, F, G	41.0106	101.00	**121.20**
500mm	94*	321*	181	618	150W	A, A+, B, D, E, F, G	41.0107	109.00	**130.80**
600mm	109*	372*	209	713	150W	A, A+, B, D, E, F, G	41.0108	119.00	**142.80**
750mm	133	454	251	856	150W	A, A+, B, D, E, F, G	41.0100	136.00	**163.20**

Wendover - Curved Chrome 800mm Height

Width	Delta △T30 Watts	Delta △T30 BTU	Delta △T50 Watts	Delta △T50 BTU	Element Output	Element Type	Code	£ Ex VAT	£ Inc VAT
400mm	91	311	173	590	150W	A, A+, B, D, E, F, G	41.0031	124.00	**148.80**
500mm	109	372	206	703	150W	A, A+, B, D, E, F, G	41.0033	130.00	**156.00**
600mm	146	498	282	962	150W	A, A+, B, D, E, F, G	41.0035	139.00	**166.80**
750mm	182*	621*	348*	1187*	150W	A, A+, B, D, E, F, G	41.0101	174.00	**208.80**

Wendover - Curved Chrome 1000mm Height

Width	Delta △T30 Watts	Delta △T30 BTU	Delta △T50 Watts	Delta △T50 BTU	Element Output	Element Type	Code	£ Ex VAT	£ Inc VAT
400mm	113	386	216	737	150W	A, A+, B, D, E, F, G	41.0037	137.00	**164.40**
500mm	134	457	257	877	150W	A, A+, B, D, E, F, G	41.0039	150.00	**180.00**
600mm	155	529	295	1006	150W	A, A+, B, D, E, F, G	41.0041	158.00	**189.60**
750mm	212*	723*	406*	1385*	300W	A, A+, B, D, E, F, G	41.0102	195.00	**234.00**

* Further heat output information available on eastbrooktrade.com **E&OA**

Wendover - Curved Chrome 1200mm Height

Width	Delta △T30 Watts	Delta △T30 BTU	Delta △T50 Watts	Delta △T50 BTU	Element Output	Element Type	Code	£ Ex VAT	£ Inc VAT
400mm	136	464	262	894	150W	A, A+, B, D, E, F, G	41.0043	158.00	**189.60**
500mm	161	550	311	1061	150W	A, A+, B, D, E, F, G	41.0045	177.00	**212.40**
600mm	204	696	386	1317	300W	A, A+, B, D, E, F, G	41.0047	189.00	**226.80**
750mm	262*	894*	502*	1712*	300W	A, A+, B, D, E, F, G	41.0103	234.00	**280.80**

Wendover - Curved Chrome 1600mm Height

Width	Delta △T30 Watts	Delta △T30 BTU	Delta △T50 Watts	Delta △T50 BTU	Element Output	Element Type	Code	£ Ex VAT	£ Inc VAT
400mm	186	635	363	1238	300W	A, A+, B, D, E, F, G	41.0049	203.00	**243.60**
500mm	220	751	431	1470	300W	A, A+, B, D, E, F, G	41.0051	222.00	**266.40**
600mm	254	867	496	1692	300W	A, A+, B, D, E, F, G	41.0053	239.00	**286.80**
750mm	343*	1170*	657*	2241*	450W	A, A+, B, D, E, F, G	41.0104	296.00	**355.20**

Wendover - Curved Chrome 1800mm Height

Width	Delta △T30 Watts	Delta △T30 BTU	Delta △T50 Watts	Delta △T50 BTU	Element Output	Element Type	Code	£ Ex VAT	£ Inc VAT
400mm	239*	815*	459*	1566*	300W	A, A+, B, D, E, F, G	41.0055	228.00	**273.60**
500mm	283*	966*	543*	1852*	300W	A, A+, B, D, E, F, G	41.0057	247.00	**296.40**
600mm	371	1266	703	2398	450W	A, A+, B, D, E, F, G	41.0059	266.00	**319.20**
750mm	403	1375	766	2613	450W	A, A+, B, D, E, F, G	41.0105	332.00	**398.40**

* Further heat output information available on eastbrooktrade.com **E&OA**

Round Vent Caps
Page 357

Robe Hooks
Page 355

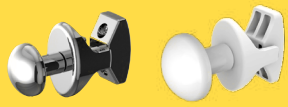

Radiator Valves
Page 338-353

TECHNICAL INFORMATION

All measurements in Height by Width. Radiators that are electric only are restricted to the heat output of the elements. Element size can be increased to full capacity of rail if using element type B, D, E, F or G. For element types see pages 324-337. For matching valves see pages 338-353. For indirect heating systems only. Tappings are approx. 50mm less than the width of the rail and approx. 70mm off the wall. Price includes radiator and wall fixing sets, valves extra.

1000mm High

1200mm High

1600mm High

1800mm High

Multirail Range

WENDOVER - STRAIGHT, GLOSS WHITE

Pictured 41.0028 Gloss White

A modern ladder towel rail, available in a vast array of sizes which is ideal for bathrooms. Wendover Straight range is available in chrome, brushed brass, gloss white, matt anthracite, matt black, black gold, brushed gunmetal and brushed bronze along with matching radiator valves and pipe shrouds.

FEATURES

- 22mm diameter horizontal round tubes
- Tested to BS EN 442 standards
- 5 Year manufacturer's warranty*
- Can be single or dual fuel, or all electric

* With conditions

Wendover - Straight Gloss White 360mm Height

Width	Delta △T30 Watts	Delta △T30 BTU	Delta △T50 Watts	Delta △T50 BTU	Element Output	Element Type	Code	£ Ex VAT	£ Inc VAT
400mm	80	273	147	502	150W	B	41.0266	47.00	**56.40**

TECHNICAL INFORMATION

All measurements in Height by Width. Radiators that are electric only are restricted to the heat output of the elements. Element size can be increased to full capacity of rail if using element type B, D, E, F or G. For element types see pages 324-337. For matching valves see pages 338-353. For indirect heating systems only. Tappings are approx. 50mm less than the width of the rail and approx. 75-95mm off the wall. Projection from wall 90-110mm. Price includes radiator and wall fixing sets, valves extra.

Warranty 5 Year | Diameter (Ø) 22 MM Bars | Heating | All Electric | Dual-Fuel

Wendover - Straight Gloss White 600mm Height

Width	Delta △T30 Watts	Delta △T30 BTU	Delta △T50 Watts	Delta △T50 BTU	Element Output	Element Type	Code	£ Ex VAT	£ Inc VAT
300mm	98	335	182	621	100W	A, A+, B, D, E, F, G	41.0070	56.00	**67.20**
400mm	120	410	220	751	150W	A, A+, B, D, E, F, G	41.0067	62.00	**74.40**
500mm	141	481	260	887	150W	A, A+, B, D, E, F, G	41.0068	65.00	**78.00**
600mm	163	556	299	1020	150W	A, A+, B, D, E, F, G	41.0069	69.00	**82.80**
750mm	193	659	361	1232	150W	A, A+, B, D, E, F, G	41.0061	79.00	**94.80**
1000mm	248	846	460	1569	300W	A, A+, B, D, E, F, G	41.0246	116.00	**139.20**
1200mm	291	993	541	1845	300W	A, A+, B, D, E, F, G	41.0247	125.00	**150.00**

Wendover - Straight Gloss White 800mm Height

Width	Delta △T30 Watts	Delta △T30 BTU	Delta △T50 Watts	Delta △T50 BTU	Element Output	Element Type	Code	£ Ex VAT	£ Inc VAT
300mm	99	338	181	618	150W	A, A+, B, D, E, F, G	41.0071	66.00	**79.20**
400mm	152	519	281	959	150W	A, A+, B, D, E, F, G	41.0002	70.00	**84.00**
500mm	180	614	332	1133	150W	A, A+, B, D, E, F, G	41.0004	74.00	**88.80**
600mm	204	696	386	1317	150W	A, A+, B, D, E, F, G	41.0006	79.00	**94.80**
750mm	250	853	461	1573	300W	A, A+, B, D, E, F, G	41.0062	96.00	**115.20**

Wendover - Straight Gloss White 1000mm Height

Width	Delta △T30 Watts	Delta △T30 BTU	Delta △T50 Watts	Delta △T50 BTU	Element Output	Element Type	Code	£ Ex VAT	£ Inc VAT
300mm	149	509	277	945	150W	A, A+, B, D, E, F, G	41.0072	78.00	**93.60**
400mm	184	628	343	1170	150W	A, A+, B, D, E, F, G	41.0008	79.00	**94.80**
500mm	219	747	408	1392	150W	A, A+, B, D, E, F, G	41.0010	84.00	**100.80**
600mm	254	867	472	1610	300W	A, A+, B, D, E, F, G	41.0012	90.00	**108.00**
750mm	303	1034	565	1927	300W	A, A+, B, D, E, F, G	41.0063	107.00	**128.40**

Wendover - Straight Gloss White 1200mm Height

Width	Delta △T30 Watts	Delta △T30 BTU	Delta △T50 Watts	Delta △T50 BTU	Element Output	Element Type	Code	£ Ex VAT	£ Inc VAT
300mm	176	601	331	1129	150W	A, A+, B, D, E, F, G	41.0073	88.00	**105.60**
400mm	218	744	409	1395	300W	A, A+, B, D, E, F, G	41.0014	90.00	**108.00**
500mm	264	901	497	1695	300W	A, A+, B, D, E, F, G	41.0016	96.00	**115.20**
600mm	294*	1003*	560*	1910*	300W	A, A+, B, D, E, F, G	41.0018	101.00	**121.20**
750mm	363	1238	680	2319	450W	A, A+, B, D, E, F, G	41.0064	126.00	**151.20**

Wendover - Straight Gloss White 1400mm Height

Width	Delta △T30 Watts	Delta △T30 BTU	Delta △T50 Watts	Delta △T50 BTU	Element Output	Element Type	Code	£ Ex VAT	£ Inc VAT
300mm	194	662	371	1266	150W	A, A+, B, D, E, F, G	41.0625	96.00	**115.20**
400mm	245	836	467	1593	300W	A, A+, B, D, E, F, G	41.0626	101.00	**121.20**
500mm	293	1000	560	1910	300W	A, A+, B, D, E, F, G	41.0627	111.00	**133.20**
600mm	340	1160	649	2214	300W	A, A+, B, D, E, F, G	41.0628	121.00	**145.20**
750mm	407	1388	778	2653	450W	A, A+, B, D, E, F, G	41.0629	152.00	**182.40**

Wendover - Straight Gloss White 1600mm Height

Width	Delta △T30 Watts	Delta △T30 BTU	Delta △T50 Watts	Delta △T50 BTU	Element Output	Element Type	Code	£ Ex VAT	£ Inc VAT
300mm	237	809	444	1515	300W	A, A+, B, D, E, F, G	41.0074	102.00	**122.40**
400mm	289	986	551	1879	300W	A, A+, B, D, E, F, G	41.0020	109.00	**130.80**
500mm	346	1180	657	2241	450W	A, A+, B, D, E, F, G	41.0022	119.00	**142.80**
600mm	398	1358	763	2602	450W	A, A+, B, D, E, F, G	41.0024	128.00	**153.60**
750mm	491	1675	915	3121	600W	A, A+, B, D, E, F, G	41.0065	155.00	**186.00**

Wendover - Straight Gloss White 1800mm Height

Width	Delta △T30 Watts	Delta △T30 BTU	Delta △T50 Watts	Delta △T50 BTU	Element Output	Element Type	Code	£ Ex VAT	£ Inc VAT
300mm	261	891	489	1668	300W	A, A+, B, D, E, F, G	41.0075	116.00	**139.20**
400mm	326	1112	615	2098	300W	A, A+, B, D, E, F, G	41.0026	124.00	**148.80**
500mm	391	1334	741	2527	450W	A, A+, B, D, E, F, G	41.0028	131.00	**157.20**
600mm	459	1566	868	2960	600W	A, A+, B, D, E, F, G	41.0030	141.00	**169.20**
750mm	561	1914	1060	3615	600W	A, A+, B, D, E, F, G	41.0066	176.00	**211.20**

* Further heat output information available on eastbrooktrade.com **E&OA**

Multirail Range

WENDOVER - CURVED, GLOSS WHITE

Pictured 41.0036 Gloss White

A modern ladder towel rail, with a range of sizes available, from 600 x 400mm to 1800 x 750mm. Wendover Curved Multirail is available in chrome and gloss white finishes.

FEATURES

- 22mm diameter horizontal round tubes
- Tested to BS EN 442 standards
- 5 Year manufacturer's warranty*
- Can be single or dual fuel, or all electric

* With conditions

Technical Tables & Drawings
Page 361

Wendover - Curved Gloss White 600mm Height

Width	Delta △T30 Watts	Delta △T30 BTU	Delta △T50 Watts	Delta △T50 BTU	Element Output	Element Type	Code	£ Ex VAT	£ Inc VAT
400mm	101*	345*	193*	659*	150W	A, A+, B, D, E, F, G	41.0097	63.00	**75.60**
500mm	119*	406*	229*	781*	150W	A, A+, B, D, E, F, G	41.0098	66.00	**79.20**
600mm	138*	471*	264*	901*	150W	A, A+, B, D, E, F, G	41.0099	70.00	**84.00**
750mm	205	700	380	1296	150W	A, A+, B, D, E, F, G	41.0091	80.00	**96.00**

Wendover - Curved Gloss White 800mm Height

Width	Delta △T30 Watts	Delta △T30 BTU	Delta △T50 Watts	Delta △T50 BTU	Element Output	Element Type	Code	£ Ex VAT	£ Inc VAT
400mm	138*	471*	266*	908*	150W	A, A+, B, D, E, F, G	41.0032	73.00	**87.60**
500mm	164*	560*	315*	1075*	150W	A, A+, B, D, E, F, G	41.0034	78.00	**93.60**
600mm	217	740	405	1382	150W	A, A+, B, D, E, F, G	41.0036	83.00	**99.60**
750mm	229*	781*	440*	1501*	300W	A, A+, B, D, E, F, G	41.0092	97.00	**116.40**

Wendover - Curved Gloss White 1000mm Height

Width	Delta △T30 Watts	Delta △T30 BTU	Delta △T50 Watts	Delta △T50 BTU	Element Output	Element Type	Code	£ Ex VAT	£ Inc VAT
400mm	164*	560*	315*	1075*	150W	A, A+, B, D, E, F, G	41.0038	80.00	**96.00**
500mm	194*	662*	372*	1269*	150W	A, A+, B, D, E, F, G	41.0040	88.00	**105.60**
600mm	223*	761*	429*	1463*	300W	A, A+, B, D, E, F, G	41.0042	91.00	**109.20**
750mm	268*	914*	514*	1753*	300W	A, A+, B, D, E, F, G	41.0093	109.00	**130.80**

Wendover - Curved Gloss White 1200mm Height

Width	Delta △T30 Watts	Delta △T30 BTU	Delta △T50 Watts	Delta △T50 BTU	Element Output	Element Type	Code	£ Ex VAT	£ Inc VAT
400mm	202*	689*	387*	1320*	300W	A, A+, B, D, E, F, G	41.0044	91.00	**109.20**
500mm	254	867	483	1648	300W	A, A+, B, D, E, F, G	41.0046	98.00	**117.60**
600mm	310	1058	576	1965	300W	A, A+, B, D, E, F, G	41.0048	103.00	**123.60**
750mm	332*	1133*	636*	2169*	450W	A, A+, B, D, E, F, G	41.0094	130.00	**156.00**

Wendover - Curved Gloss White 1600mm Height

Width	Delta △T30 Watts	Delta △T30 BTU	Delta △T50 Watts	Delta △T50 BTU	Element Output	Element Type	Code	£ Ex VAT	£ Inc VAT
400mm	265*	904*	508*	1733*	300W	A, A+, B, D, E, F, G	41.0050	112.00	**134.40**
500mm	313*	1068*	601*	2050*	450W	A, A+, B, D, E, F, G	41.0052	124.00	**148.80**
600mm	386	1317	740	2524	450W	A, A+, B, D, E, F, G	41.0054	131.00	**157.20**
750mm	434*	1480*	832*	2838*	600W	A, A+, B, D, E, F, G	41.0095	158.00	**189.60**

Wendover - Curved Gloss White 1800mm Height

Width	Delta △T30 Watts	Delta △T30 BTU	Delta △T50 Watts	Delta △T50 BTU	Element Output	Element Type	Code	£ Ex VAT	£ Inc VAT
400mm	303*	1034*	581*	1982*	300W	A, A+, B, D, E, F, G	41.0056	125.00	**150.00**
500mm	358*	1221*	687*	2343*	450W	A, A+, B, D, E, F, G	41.0058	136.00	**163.20**
600mm	538	1835	1012	3451	600W	A, A+, B, D, E, F, G	41.0060	146.00	**175.20**
750mm	594	2026	1116	3806	600W	A, A+, B, D, E, F, G	41.0096	178.00	**213.60**

* Further heat output information available on eastbrooktrade.com **E&OA**

TECHNICAL INFORMATION

All measurements in Height by Width. Radiators that are electric only are restricted to the heat output of the elements. Element size can be increased to full capacity of rail if using element type B, D, E, F or G. For element types see pages 324-337. For matching valves see pages 338-353. For indirect heating systems only. Tappings are approx. 50mm less than the width of the rail and approx. 70mm off the wall. Price includes radiator and wall fixing sets, valves extra.

Round Vent Caps
Page 357

Robe Hooks
Page 355

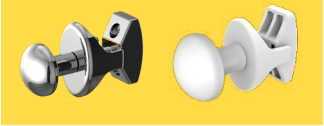

Warranty 5 Year | Diameter (Ø) 22 MM Bars | Heating | All Electric | Dual-Fuel

Multirail Range

WENDOVER - STRAIGHT MATT ANTHRACITE

Pictured 41.0324 Matt Anthracite

Pictured 41.0326 Matt Anthracite

A modern ladder towel rail, available in a vast array of sizes which is ideal for bathrooms. Wendover Straight range is available in chrome, brushed brass, gloss white, matt anthracite, matt black, black gold, brushed gunmetal and brushed bronze along with matching radiator valves and pipe shrouds.

FEATURES

- 22mm diameter horizontal round tubes
- Tested to BS EN 442 standards
- 5 Year manufacturer's warranty*
- Can be single or dual fuel, or all electric

* With conditions

Technical Tables & Drawings
Page 360-361

Warranty 5 Year | Diameter (Ø) 22 MM Bars | Heating | All Electric | Dual-Fuel

Wendover - Straight Matt Anthracite 360mm Height

Width	Delta △T30 Watts	Delta △T30 BTU	Delta △T50 Watts	Delta △T50 BTU	Element Output	Element Type	Code	£ Ex VAT	£ Inc VAT
400mm	80	273	147	502	150W	B	41.0630	50.00	**60.00**

Wendover - Straight Matt Anthracite 600mm Height

Width	Delta △T30 Watts	Delta △T30 BTU	Delta △T50 Watts	Delta △T50 BTU	Element Output	Element Type	Code	£ Ex VAT	£ Inc VAT
300mm	98	335	182	621	100W	A, A+, B, D, E, F, G	41.0631	58.00	**69.60**
400mm	120	410	220	751	150W	A, A+, B, D, E, F, G	41.0320	65.00	**78.00**
500mm	141	481	260	887	150W	A, A+, B, D, E, F, G	41.0321	69.00	**82.80**
600mm	163	556	299	1020	150W	A, A+, B, D, E, F, G	41.0322	73.00	**87.60**
750mm	193	659	361	1232	150W	A, A+, B, D, E, F, G	41.0632	83.00	**99.60**
1000mm	248	846	460	1569	300W	A, A+, B, D, E, F, G	41.0633	119.00	**142.80**
1200mm	291	993	541	1845	300W	A, A+, B, D, E, F, G	41.0634	130.00	**156.00**

360mm High

600mm High

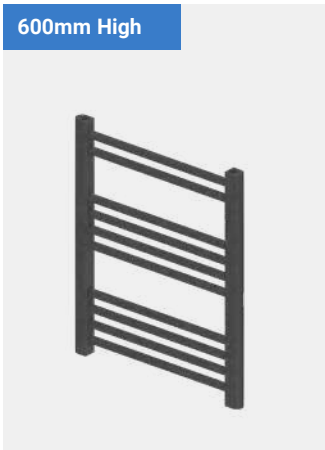

Multirail Range

WENDOVER - STRAIGHT MATT ANTHRACITE

Wendover - Straight Matt Anthracite 800mm Height

Width	Delta △T30 Watts	Delta △T30 BTU	Delta △T50 Watts	Delta △T50 BTU	Element Output	Element Type	Code	£ Ex VAT	£ Inc VAT
300mm	99	338	181	618	150W	A, A+, B, D, E, F, G	41.0635	70.00	**84.00**
400mm	152	519	281	959	150W	A, A+, B, D, E, F, G	41.0636	73.00	**87.60**
500mm	180	614	332	1133	150W	A, A+, B, D, E, F, G	41.0637	79.00	**94.80**
600mm	204	696	386	1317	150W	A, A+, B, D, E, F, G	41.0638	86.00	**103.20**
750mm	250	853	461	1573	300W	A, A+, B, D, E, F, G	41.0639	104.00	**124.80**

Wendover - Straight Matt Anthracite 1400mm Height

Width	Delta △T30 Watts	Delta △T30 BTU	Delta △T50 Watts	Delta △T50 BTU	Element Output	Element Type	Code	£ Ex VAT	£ Inc VAT
300mm	194	662	371	1266	150W	A, A+, B, D, E, F, G	41.0647	98.00	**117.60**
400mm	245	836	467	1593	300W	A, A+, B, D, E, F, G	41.0648	103.00	**123.60**
500mm	293	1000	560	1910	300W	A, A+, B, D, E, F, G	41.0649	114.00	**136.80**
600mm	340	1160	649	2214	300W	A, A+, B, D, E, F, G	41.0650	121.00	**145.20**
750mm	407	1388	778	2653	450W	A, A+, B, D, E, F, G	41.0651	151.00	**181.20**

Wendover - Straight Matt Anthracite 1000mm Height

Width	Delta △T30 Watts	Delta △T30 BTU	Delta △T50 Watts	Delta △T50 BTU	Element Output	Element Type	Code	£ Ex VAT	£ Inc VAT
300mm	149	509	277	945	150W	A, A+, B, D, E, F, G	41.0640	81.00	**97.20**
400mm	184	628	343	1170	150W	A, A+, B, D, E, F, G	41.0641	83.00	**99.60**
500mm	219	747	408	1392	150W	A, A+, B, D, E, F, G	41.0642	91.00	**109.20**
600mm	254	867	472	1610	300W	A, A+, B, D, E, F, G	41.0643	95.00	**114.00**
750mm	303	1034	565	1927	300W	A, A+, B, D, E, F, G	41.0644	117.00	**140.40**

Wendover - Straight Matt Anthracite 1600mm Height

Width	Delta △T30 Watts	Delta △T30 BTU	Delta △T50 Watts	Delta △T50 BTU	Element Output	Element Type	Code	£ Ex VAT	£ Inc VAT
300mm	237	809	444	1515	300W	A, A+, B, D, E, F, G	41.0652	108.00	**129.60**
400mm	289	986	551	1879	300W	A, A+, B, D, E, F, G	41.0653	114.00	**136.80**
500mm	346	1180	657	2241	450W	A, A+, B, D, E, F, G	41.0654	125.00	**150.00**
600mm	398	1358	763	2602	450W	A, A+, B, D, E, F, G	41.0655	137.00	**164.40**
750mm	491	1675	915	3121	600W	A, A+, B, D, E, F, G	41.0656	171.00	**205.20**

Wendover - Straight Matt Anthracite 1200mm Height

Width	Delta △T30 Watts	Delta △T30 BTU	Delta △T50 Watts	Delta △T50 BTU	Element Output	Element Type	Code	£ Ex VAT	£ Inc VAT
300mm	176	601	331	1129	150W	A, A+, B, D, E, F, G	41.0645	92.00	**110.40**
400mm	218	744	409	1395	300W	A, A+, B, D, E, F, G	41.0323	96.00	**115.20**
500mm	264	901	497	1695	300W	A, A+, B, D, E, F, G	41.0324	100.00	**120.00**
600mm	294*	1003*	560*	1910*	300W	A, A+, B, D, E, F, G	41.0325	107.00	**128.40**
750mm	363	1238	680	2319	450W	A, A+, B, D, E, F, G	41.0646	138.00	**165.60**

Wendover - Straight Matt Anthracite 1800mm Height

Width	Delta △T30 Watts	Delta △T30 BTU	Delta △T50 Watts	Delta △T50 BTU	Element Output	Element Type	Code	£ Ex VAT	£ Inc VAT
300mm	261	891	489	1668	300W	A, A+, B, D, E, F, G	41.0657	122.00	**146.40**
400mm	326	1112	615	2098	300W	A, A+, B, D, E, F, G	41.0658	130.00	**156.00**
500mm	391	1334	741	2527	450W	A, A+, B, D, E, F, G	41.0326	139.00	**166.80**
600mm	459	1566	868	2960	600W	A, A+, B, D, E, F, G	41.0327	150.00	**180.00**
750mm	561	1914	1060	3615	600W	A, A+, B, D, E, F, G	41.0659	191.00	**229.20**

* Further heat output information available on eastbrooktrade.com **E&OA**

Round Vent Caps
Page 357

Robe Hooks
Page 355

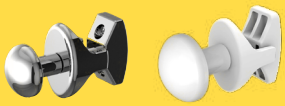

Towel Hangers
Page 355-356

Multi-Rail Hangers
Page 355-356

TECHNICAL INFORMATION

All measurements in Height by Width. Radiators that are electric only are restricted to the heat output of the elements. Element size can be increased to full capacity of rail if using element type B, D, E, F or G. For element types see pages 324-337. For matching valves see pages 338-353. For indirect heating systems only. Tappings are approx. 50mm less than the width of the rail and approx. 75-95mm off the wall. Projection from wall 90-110mm. Price includes radiator and wall fixing sets, valves extra.

800mm High

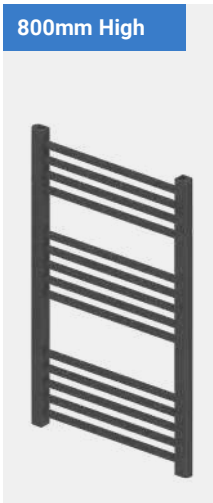

1000mm High

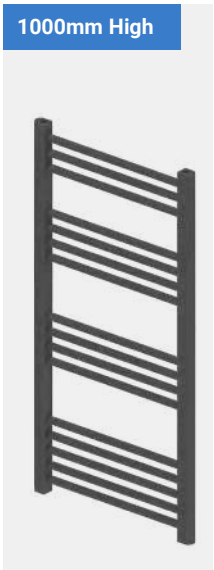

1200mm High

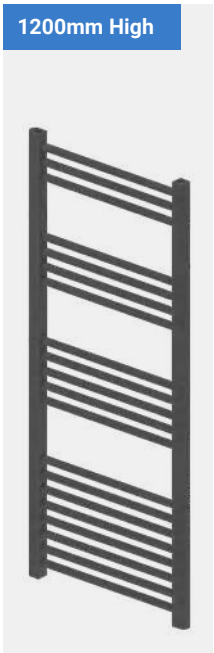

1400mm High

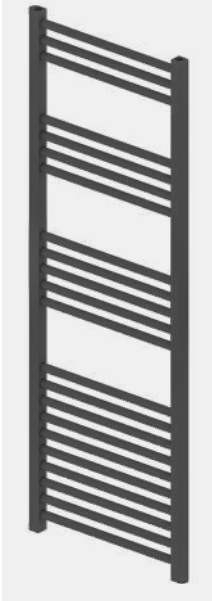

1600mm High

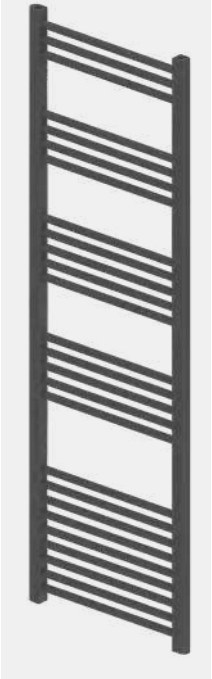

1800mm High

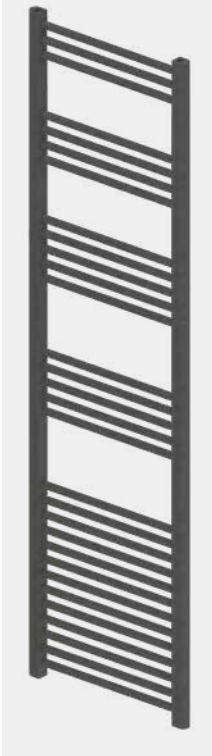

Multirail Range

WENDOVER - STRAIGHT MATT BLACK

Pictured 41.0670 Matt Black

Pictured 41.0681 Matt Black

A modern ladder towel rail, available in a vast array of sizes which is ideal for bathrooms. Wendover Straight range is available in chrome, brushed brass, gloss white, matt anthracite, matt black, black gold, brushed gunmetal and brushed bronze along with matching radiator valves and pipe shrouds.

FEATURES

- 22mm diameter horizontal round tubes
- Tested to BS EN 442 standards
- 5 Year manufacturer's warranty*
- Can be single or dual fuel, or all electric

* With conditions

Technical Tables & Drawings
Page 360-361

Warranty 5 Year | Diameter (Ø) 22 MM Bars | Heating | All Electric | Dual-Fuel

Wendover - Straight Matt Black 360mm Height

Width	Delta △T30 Watts	Delta △T30 BTU	Delta △T50 Watts	Delta △T50 BTU	Element Output	Element Type	Code	£ Ex VAT	£ Inc VAT
400mm	80	273	147	502	150W	B	41.0660	50.00	**60.00**

Wendover - Straight Matt Black 600mm Height

Width	Delta △T30 Watts	Delta △T30 BTU	Delta △T50 Watts	Delta △T50 BTU	Element Output	Element Type	Code	£ Ex VAT	£ Inc VAT
300mm	98	335	182	621	100W	A, A+, B, D, E, F, G	41.0661	58.00	**69.60**
400mm	120	410	220	751	150W	A, A+, B, D, E, F, G	41.0662	65.00	**78.00**
500mm	141	481	260	887	150W	A, A+, B, D, E, F, G	41.0663	69.00	**82.80**
600mm	163	556	299	1020	150W	A, A+, B, D, E, F, G	41.0664	73.00	**87.60**
750mm	193	659	361	1232	150W	A, A+, B, D, E, F, G	41.0665	83.00	**99.60**
1000mm	248	846	460	1569	300W	A, A+, B, D, E, F, G	41.0666	119.00	**142.80**
1200mm	291	993	541	1845	300W	A, A+, B, D, E, F, G	41.0667	130.00	**156.00**

360mm High

600mm High

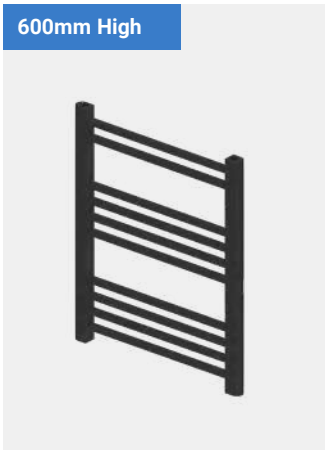

Multirail Range

WENDOVER - STRAIGHT MATT BLACK

Wendover - Straight Matt Black 800mm Height

Width	Delta △T30 Watts	Delta △T30 BTU	Delta △T50 Watts	Delta △T50 BTU	Element Output	Element Type	Code	£ Ex VAT	£ Inc VAT
300mm	99	338	181	618	150W	A, A+, B, D, E, F, G	41.0668	70.00	**84.00**
400mm	152	519	281	959	150W	A, A+, B, D, E, F, G	41.0669	73.00	**87.60**
500mm	180	614	332	1133	150W	A, A+, B, D, E, F, G	41.0670	79.00	**94.80**
600mm	204	696	386	1317	150W	A, A+, B, D, E, F, G	41.0671	86.00	**103.20**
750mm	250	853	461	1573	300W	A, A+, B, D, E, F, G	41.0672	104.00	**124.80**

Wendover - Straight Matt Black 1000mm Height

Width	Delta △T30 Watts	Delta △T30 BTU	Delta △T50 Watts	Delta △T50 BTU	Element Output	Element Type	Code	£ Ex VAT	£ Inc VAT
300mm	149	509	277	945	150W	A, A+, B, D, E, F, G	41.0673	81.00	**97.20**
400mm	184	628	343	1170	150W	A, A+, B, D, E, F, G	41.0674	83.00	**99.60**
500mm	219	747	408	1392	150W	A, A+, B, D, E, F, G	41.0675	91.00	**109.20**
600mm	254	867	472	1610	300W	A, A+, B, D, E, F, G	41.0676	95.00	**114.00**
750mm	303	1034	565	1927	300W	A, A+, B, D, E, F, G	41.0677	117.00	**140.40**

Wendover - Straight Matt Black 1200mm Height

Width	Delta △T30 Watts	Delta △T30 BTU	Delta △T50 Watts	Delta △T50 BTU	Element Output	Element Type	Code	£ Ex VAT	£ Inc VAT
300mm	176	601	331	1129	150W	A, A+, B, D, E, F, G	41.0678	92.00	**110.40**
400mm	218	744	409	1395	300W	A, A+, B, D, E, F, G	41.0679	96.00	**115.20**
500mm	264	901	497	1695	300W	A, A+, B, D, E, F, G	41.0680	100.00	**120.00**
600mm	294*	1003*	560*	1910*	300W	A, A+, B, D, E, F, G	41.0681	107.00	**128.40**
750mm	363	1238	680	2319	450W	A, A+, B, D, E, F, G	41.0682	138.00	**165.60**

Wendover - Straight Matt Black 1400mm Height

Width	Delta △T30 Watts	Delta △T30 BTU	Delta △T50 Watts	Delta △T50 BTU	Element Output	Element Type	Code	£ Ex VAT	£ Inc VAT
300mm	194	662	371	1266	150W	A, A+, B, D, E, F, G	41.0683	98.00	**117.60**
400mm	245	836	467	1593	300W	A, A+, B, D, E, F, G	41.0684	103.00	**123.60**
500mm	293	1000	560	1910	300W	A, A+, B, D, E, F, G	41.0685	114.00	**136.80**
600mm	340	1160	649	2214	300W	A, A+, B, D, E, F, G	41.0686	121.00	**145.20**
750mm	407	1388	778	2653	450W	A, A+, B, D, E, F, G	41.0687	151.00	**181.20**

Wendover - Straight Matt Black 1600mm Height

Width	Delta △T30 Watts	Delta △T30 BTU	Delta △T50 Watts	Delta △T50 BTU	Element Output	Element Type	Code	£ Ex VAT	£ Inc VAT
300mm	237	809	444	1515	300W	A, A+, B, D, E, F, G	41.0688	108.00	**129.60**
400mm	289	986	551	1879	300W	A, A+, B, D, E, F, G	41.0689	114.00	**136.80**
500mm	346	1180	657	2241	450W	A, A+, B, D, E, F, G	41.0690	125.00	**150.00**
600mm	398	1358	763	2602	450W	A, A+, B, D, E, F, G	41.0691	137.00	**164.40**
750mm	491	1675	915	3121	600W	A, A+, B, D, E, F, G	41.0692	171.00	**205.20**

Wendover - Straight Matt Black 1800mm Height

Width	Delta △T30 Watts	Delta △T30 BTU	Delta △T50 Watts	Delta △T50 BTU	Element Output	Element Type	Code	£ Ex VAT	£ Inc VAT
300mm	261	891	489	1668	300W	A, A+, B, D, E, F, G	41.0693	122.00	**146.40**
400mm	326	1112	615	2098	300W	A, A+, B, D, E, F, G	41.0694	130.00	**156.00**
500mm	391	1334	741	2527	450W	A, A+, B, D, E, F, G	41.0695	139.00	**166.80**
600mm	459	1566	868	2960	600W	A, A+, B, D, E, F, G	41.0696	150.00	**180.00**
750mm	561	1914	1060	3615	600W	A, A+, B, D, E, F, G	41.0697	191.00	**229.20**

* Further heat output information available on eastbrooktrade.com **E&OA**

Round Vent Caps
Page 357

Robe Hooks
Page 355

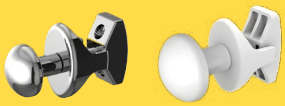

Towel Hangers
Page 355-356

Multi-Rail Hangers
Page 355-356

TECHNICAL INFORMATION

All measurements in Height by Width. Radiators that are electric only are restricted to the heat output of the elements. Element size can be increased to full capacity of rail if using element type B, D, E, F or G. For element types see pages 324-337. For matching valves see pages 338-353. For indirect heating systems only. Tappings are approx. 50mm less than the width of the rail and approx. 75-95mm off the wall. Projection from wall 90-110mm. Price includes radiator and wall fixing sets, valves extra.

800mm High

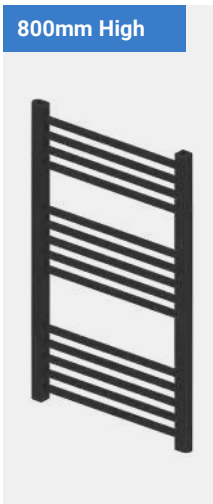

1000mm High

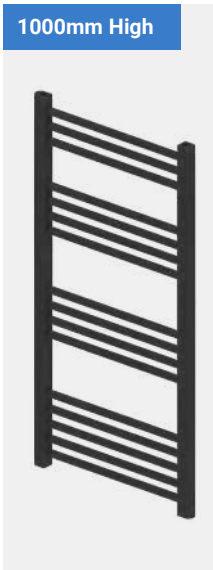

1200mm High

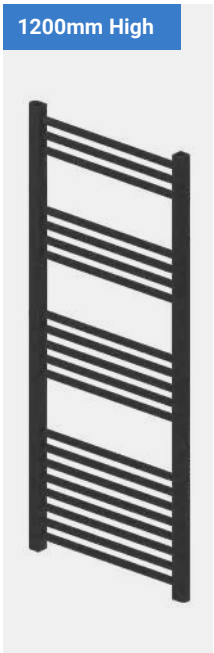

1400mm High

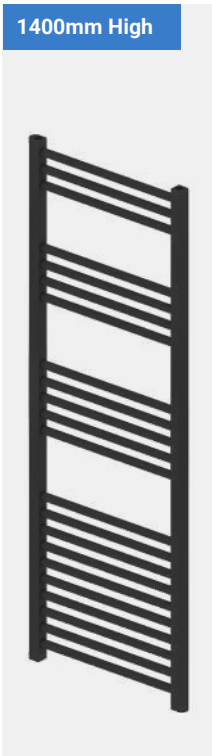

1600mm High

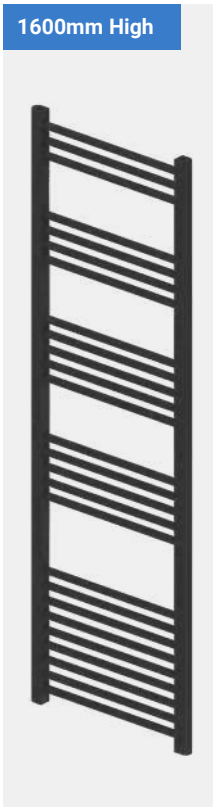

1800mm High

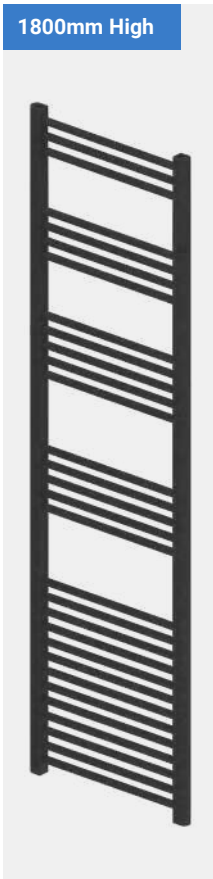

Multirail Range

Wendover - STRAIGHT Brushed Brass

Brushed Brass colour shown in images are subject to the limitations of the printing process and may appear different.

Pictured 41.0361 Brushed Brass

Pictured 41.0363 Brushed Brass

Rear fixing wall brackets

A modern ladder towel rail, available in a vast array of sizes which is ideal for bathrooms. Wendover Straight range is available in chrome, brushed brass, gloss white, matt anthracite, matt black, black gold, brushed gunmetal and brushed bronze along with matching radiator valves and pipe shrouds.

FEATURES

- 22mm diameter horizontal round tubes
- High quality PVD coating
- Rear fixing metal wall brackets
- Tested to BS EN 442 standards
- Can be single or dual fuel, or all electric
- Comes with same colour blanking plug & bleed valve
- 5 Year manufacturer's warranty*

* With conditions

Technical Tables & Drawings
Page 360-361

Warranty 5 Year | Diameter (Ø) 22 MM Bars | Heating | All Electric | Dual-Fuel

Wendover - Straight Brushed Brass 360mm Height

Width	Delta △T30 Watts	Delta △T30 BTU	Delta △T50 Watts	Delta △T50 BTU	Element Output	Element Type	Code	£ Ex VAT	£ Inc VAT
400mm	68	232	126	430	100W	B	41.1170	99.00	**118.80**

Wendover - Straight Brushed Brass 600mm Height

Width	Delta △T30 Watts	Delta △T30 BTU	Delta △T50 Watts	Delta △T50 BTU	Element Output	Element Type	Code	£ Ex VAT	£ Inc VAT
300mm	80	273	149	509	100W	A, A+, B	41.1171	142.00	**170.40**
400mm	78	266	150	512	100W	A, A+, B, D, E, F, G	41.0698	142.00	**170.40**
500mm	93	318	178	607	100W	A, A+, B, D, E, F, G	41.0699	146.00	**175.20**
600mm	108	369	207	706	150W	A, A+, B, D, E, F, G	41.0700	151.00	**181.20**
750mm	172	587	321	1095	150W	A, A+, B, D, E, F, G	41.1172	176.00	**211.20**
1000mm	218	744	407	1388	150W	A, A+, B, D, E, F, G	41.1173	209.00	**250.80**
1200mm	254	867	474	1617	150W	A, A+, B, D, E, F, G	41.1174	225.00	**270.00**

360mm High

600mm High

Multirail Range

WENDOVER - STRAIGHT BRUSHED BRASS

Wendover - Straight Brushed Brass 800mm Height

Width	Delta △T30 Watts	Delta △T30 BTU	Delta △T50 Watts	Delta △T50 BTU	Element Output	Element Type	Code	£ Ex VAT	£ Inc VAT
300mm	102	348	192	655	100W	A, A+, B, D, E, F, G	41.1175	180.00	**216.00**
400mm	108	369	207	706	150W	A, A+, B, D, E, F, G	41.0701	177.00	**212.40**
500mm	128	437	246	839	150W	A, A+, B, D, E, F, G	41.0361	180.00	**216.00**
600mm	149	509	285	972	150W	A, A+, B, D, E, F, G	41.0362	192.00	**230.40**
750mm	219	747	412	1405	150W	A, A+, B, D, E, F, G	41.1176	233.00	**279.60**

Wendover - Straight Brushed Brass 1000mm Height

Width	Delta △T30 Watts	Delta △T30 BTU	Delta △T50 Watts	Delta △T50 BTU	Element Output	Element Type	Code	£ Ex VAT	£ Inc VAT
300mm	125	427	236	805	150W	A, A+, B, D, E, F, G	41.1177	215.00	**258.00**
400mm	127	434	245	836	150W	A, A+, B, D, E, F, G	41.0702	211.00	**253.20**
500mm	151	515	290	989	150W	A, A+, B, D, E, F, G	41.0703	215.00	**258.00**
600mm	186	635	344	1174	150W	A, A+, B, D, E, F, G	41.0704	219.00	**262.80**
750mm	268	914	508	1733	300W	A, A+, B, D, E, F, G	41.1178	278.00	**333.60**

Wendover - Straight Brushed Brass 1200mm Height

Width	Delta △T30 Watts	Delta △T30 BTU	Delta △T50 Watts	Delta △T50 BTU	Element Output	Element Type	Code	£ Ex VAT	£ Inc VAT
300mm	148	505	284	969	150W	A, A+, B, D, E, F, G	41.1179	254.00	**304.80**
400mm	157	536	301	1027	150W	A, A+, B, D, E, F, G	41.0705	249.00	**298.80**
500mm	186	635	357	1218	150W	A, A+, B, D, E, F, G	41.0363	254.00	**304.80**
600mm	216	737	414	1412	300W	A, A+, B, D, E, F, G	41.0364	259.00	**310.80**
750mm	319	1088	609	2077	300W	A, A+, B, D, E, F, G	41.1180	331.00	**397.20**

Wendover - Straight Brushed Brass 1400mm Height

Width	Delta △T30 Watts	Delta △T30 BTU	Delta △T50 Watts	Delta △T50 BTU	Element Output	Element Type	Code	£ Ex VAT	£ Inc VAT
300mm	173	590	334	1139	150W	A, A+, B, D, E, F, G	41.1181	275.00	**330.00**
400mm	177	604	339	1156	150W	A, A+, B, D, E, F, G	41.0706	276.00	**331.20**
500mm	209	713	401	1368	300W	A, A+, B, D, E, F, G	41.0365	283.00	**339.60**
600mm	241	822	463	1579	300W	A, A+, B, D, E, F, G	41.0366	294.00	**352.80**
750mm	372	1269	717	2445	300W	A, A+, B, D, E, F, G	41.1182	358.00	**429.60**

Wendover - Straight Brushed Brass 1600mm Height

Width	Delta △T30 Watts	Delta △T30 BTU	Delta △T50 Watts	Delta △T50 BTU	Element Output	Element Type	Code	£ Ex VAT	£ Inc VAT
300mm	200	682	388	1324	150W	A, A+, B, D, E, F, G	41.1183	328.00	**393.60**
400mm	206	703	396	1351	300W	A, A+, B, D, E, F, G	41.0707	322.00	**386.40**
500mm	244	833	469	1600	300W	A, A+, B, D, E, F, G	41.0367	328.00	**393.60**
600mm	282	962	542	1849	300W	A, A+, B, D, E, F, G	41.0368	334.00	**400.80**
750mm	429	1463	833	2841	450W	A, A+, B, D, E, F, G	41.1184	428.00	**513.60**

Wendover - Straight Brushed Brass 1800mm Height

Width	Delta △T30 Watts	Delta △T30 BTU	Delta △T50 Watts	Delta △T50 BTU	Element Output	Element Type	Code	£ Ex VAT	£ Inc VAT
300mm	228	778	446	1521	150W	A, A+, B, D, E, F, G	41.1185	366.00	**439.20**
400mm	236	805	452	1542	300W	A, A+, B, D, E, F, G	41.0708	360.00	**432.00**
500mm	280	955	536	1828	300W	A, A+, B, D, E, F, G	41.0369	366.00	**439.20**
600mm	324	1105	621	2118	450W	A, A+, B, D, E, F, G	41.0370	375.00	**450.00**
750mm	489	1668	958	3267	600W	A, A+, B, D, E, F, G	41.1186	480.00	**576.00**

Pictured 41.0732

Bleed Valve & Blanking Plug Set - Brushed Brass

Code	£ Ex VAT	£ Inc VAT
41.0732	11.00	**13.20**

TECHNICAL INFORMATION

All measurements in Height by Width. Radiators that are electric only are restricted to the heat output of the elements. Element size can be increased to full capacity of rail if using element type B, D, E, F or G. For element types see pages 324-337. For matching valves see pages 338-353. For indirect heating systems only. Tappings are approx. 50mm less than the width of the rail and approx. 59-69mm off the wall. Projection from wall 74-84mm. Price includes radiator and wall fixing sets, valves extra.

800mm High

1000mm High

1200mm High

1400mm High

1600mm High

1800mm High

• NEW COLOUR HERE •

Multirail Range

WENDOVER - STRAIGHT

Pictured 41.1216 Brushed Bronze

Available June 2026

Brushed Bronze colour

Colours shown in images are subject to the limitations of the printing process and may appear different.

Pictured 41.1222

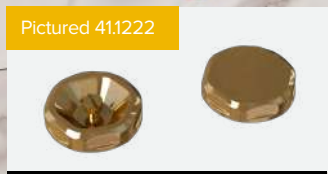

Bleed Valve & Blanking Plug Set - Brushed Bronze

Code	£ Ex VAT	£ Inc VAT
41.1222	11.00	**13.20**

A modern ladder towel rail, available in a vast array of sizes which is ideal for bathrooms. Wendover Straight range is available in chrome, brushed brass, gloss white, matt anthracite, matt black, black gold, brushed gunmetal and brushed bronze along with matching radiator valves and pipe shrouds.

FEATURES

- 22mm diameter horizontal round tubes
- High quality PVD coating
- Rear fixing metal wall brackets
- Tested to BS EN 442 standards
- Can be single or dual fuel, or all electric
- Comes with same colour blanking plug & bleed valve
- 5 Year manufacturer's warranty*

* With conditions

Technical Tables & Drawings
Page 360-361

Warranty 5 Year | Diameter (Ø) 22 MM Bars | Heating | All Electric | Dual-Fuel

Rear fixing wall brackets

Black Gold colour

Colours shown in images are subject to the limitations of the printing process and may appear different.

Pictured 41.0864 Black Gold

Multirail Range

WENDOVER - STRAIGHT

Black Gold

Wendover - Straight, Black Gold 800mm Height

Width	Delta △T30 Watts	Delta △T30 BTU	Delta △T50 Watts	Delta △T50 BTU	Element Output	Element Type	Code	£ Ex VAT	£ Inc VAT
400mm	108	369	207	706	150W	A, A+, B, D, E, F, G	41.0856	185.00	**222.00**
500mm	128	437	246	839	150W	A, A+, B, D, E, F, G	41.0857	197.00	**236.40**
600mm	149	509	285	972	150W	A, A+, B, D, E, F, G	41.0858	205.00	**246.00**

Wendover - Straight, Black Gold 1200mm Height

Width	Delta △T30 Watts	Delta △T30 BTU	Delta △T50 Watts	Delta △T50 BTU	Element Output	Element Type	Code	£ Ex VAT	£ Inc VAT
400mm	157	536	301	1027	150W	A, A+, B, D, E, F, G	41.0859	269.00	**322.80**
500mm	186	635	357	1218	150W	A, A+, B, D, E, F, G	41.0860	282.00	**338.40**
600mm	216	737	414	1412	150W	A, A+, B, D, E, F, G	41.0861	294.00	**352.80**

Wendover - Straight, Black Gold 1800mm Height

Width	Delta △T30 Watts	Delta △T30 BTU	Delta △T50 Watts	Delta △T50 BTU	Element Output	Element Type	Code	£ Ex VAT	£ Inc VAT
400mm	236	805	452	1542	300W	A, A+, B, D, E, F, G	41.0862	402.00	**482.40**
500mm	280	955	536	1828	300W	A, A+, B, D, E, F, G	41.0863	412.00	**494.40**
600mm	324	1105	621	2118	300W	A, A+, B, D, E, F, G	41.0864	431.00	**517.20**

Brushed Gunmetal

Wendover - Straight, Brushed Gunmetal 800mm Height

Width	Delta △T30 Watts	Delta △T30 BTU	Delta △T50 Watts	Delta △T50 BTU	Element Output	Element Type	Code	£ Ex VAT	£ Inc VAT
400mm	108	369	207	706	150W	A, A+, B, D, E, F, G	41.0865	221.00	**265.20**
500mm	128	437	246	839	150W	A, A+, B, D, E, F, G	41.0866	234.00	**280.80**
600mm	149	509	285	972	150W	A, A+, B, D, E, F, G	41.0867	244.00	**292.80**

Wendover - Straight, Brushed Gunmetal 1200mm Height

Width	Delta △T30 Watts	Delta △T30 BTU	Delta △T50 Watts	Delta △T50 BTU	Element Output	Element Type	Code	£ Ex VAT	£ Inc VAT
400mm	157	536	301	1027	150W	A, A+, B, D, E, F, G	41.0868	321.00	**385.20**
500mm	186	635	357	1218	150W	A, A+, B, D, E, F, G	41.0869	335.00	**402.00**
600mm	216	737	414	1412	150W	A, A+, B, D, E, F, G	41.0870	350.00	**420.00**

Wendover - Straight, Brushed Gunmetal 1800mm Height

Width	Delta △T30 Watts	Delta △T30 BTU	Delta △T50 Watts	Delta △T50 BTU	Element Output	Element Type	Code	£ Ex VAT	£ Inc VAT
400mm	236	805	452	1542	300W	A, A+, B, D, E, F, G	41.0871	479.00	**574.80**
500mm	280	955	536	1828	300W	A, A+, B, D, E, F, G	41.0872	492.00	**590.40**
600mm	324	1105	621	2118	300W	A, A+, B, D, E, F, G	41.0873	513.00	**615.60**

Brushed Bronze NEW COLOUR

Wendover - Straight, Brushed Bronze 800mm Height

Width	Delta △T30 Watts	Delta △T30 BTU	Delta △T50 Watts	Delta △T50 BTU	Element Output	Element Type	Code	£ Ex VAT	£ Inc VAT
400mm	108	369	207	706	150W	A, A+, B, D, E, F, G	41.1211	221.00	**265.20**
500mm	128	437	246	839	150W	A, A+, B, D, E, F, G	41.1212	234.00	**280.80**
600mm	149	509	285	972	150W	A, A+, B, D, E, F, G	41.1213	244.00	**292.80**

Wendover - Straight, Brushed Bronze 1200mm Height

Width	Delta △T30 Watts	Delta △T30 BTU	Delta △T50 Watts	Delta △T50 BTU	Element Output	Element Type	Code	£ Ex VAT	£ Inc VAT
400mm	157	536	301	1027	150W	A, A+, B, D, E, F, G	41.1214	321.00	**385.20**
500mm	186	635	357	1218	150W	A, A+, B, D, E, F, G	41.1215	335.00	**402.00**
600mm	216	737	414	1412	150W	A, A+, B, D, E, F, G	41.1216	350.00	**420.00**

Wendover - Straight, Brushed Bronze 1800mm Height

Width	Delta △T30 Watts	Delta △T30 BTU	Delta △T50 Watts	Delta △T50 BTU	Element Output	Element Type	Code	£ Ex VAT	£ Inc VAT
400mm	236	805	452	1542	300W	A, A+, B, D, E, F, G	41.1217	479.00	**574.80**
500mm	280	955	536	1828	300W	A, A+, B, D, E, F, G	41.1218	492.00	**590.40**
600mm	324	1105	621	2118	300W	A, A+, B, D, E, F, G	41.1219	513.00	**615.60**

Black Gold

Tube Diameter
22mm

Brushed Gunmetal

Tube Diameter
22mm

Brushed Bronze

Tube Diameter
22mm

TECHNICAL INFORMATION

All measurements in Height by Width. Radiators that are electric only are restricted to the heat output of the elements. Element size can be increased to full capacity of rail if using element type B, D, E, F or G. For element types see pages 324-337. For matching valves see pages 338-353. For indirect heating systems only. Tappings are approx. 50mm less than the width of the rail and approx. 59-69mm off the wall. Projection from wall 74-84mm. Price includes radiator and wall fixing sets, valves extra.

• NEW SIZES HERE •

Multirail Range

BIAVA MULTIRAIL HIDDEN VENT (HV), STRAIGHT

Pictured 62.0380 Gloss White

Pictured 62.0374 Chrome

Sleek, Minimalistic Tops

Rear Side Hidden Air Vent

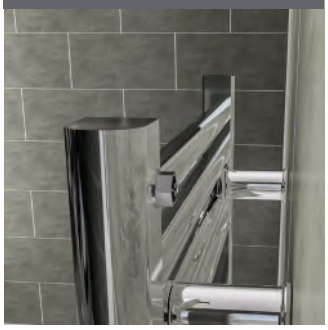

TECHNICAL INFORMATION

All measurements in Height by Width. Radiators that are electric only are restricted to the heat output of the elements. Element size can be increased to full capacity of rail if using element type B, D, E, F or G. For element types see pages 324-337. For matching valves see pages 338-353. For indirect heating systems only. Tappings are approx. 50mm less than the width of the rail and approx. 70-85mm off the wall. Price includes radiator and wall fixing sets, valves extra.

Biava Multirail HV towel rail rewrites the standards with the air vent hidden at the back of the towel rail and flush finished tops.

FEATURES
- Tested to BS EN 442 standards
- Hidden air vent at the rear
- Tappings only at the bottom
- Flush finished tops
- Can be single, dual fuel or all electric
- 5 Year Manufacturer's Warranty*

* With conditions

Technical Tables & Drawings
Page 362-363

Multirail Range

BIAVA MULTIRAIL HIDDEN VENT (HV), STRAIGHT

Chrome NEW SIZES

Biava Multirail Hidden Vent Straight - Chrome 360mm Height

Width	Delta △T30 Watts	Delta △T30 BTU	Delta △T50 Watts	Delta △T50 BTU	Element Output	Element Type	Code	£ Ex VAT	£ Inc VAT
400mm	48	164	91	311	150W	B	62.0366	46.00	**55.20**

Biava Multirail Hidden Vent Straight - Chrome 688mm Height

Width	Delta △T30 Watts	Delta △T30 BTU	Delta △T50 Watts	Delta △T50 BTU	Element Output	Element Type	Code	£ Ex VAT	£ Inc VAT
450mm	96	328	184	628	150W	A, A+, B, D, E, F, G	62.0367	68.00	**81.60**
500mm	108*	370*	211*	718*	150W	A, A+, B, D, E, F, G	62.0416	73.00	**87.60**
600mm	124	423	238	812	150W	A, A+, B, D, E, F, G	61.0076	78.00	**93.60**
750mm	152	519	291	993	150W	A, A+, B, D, E, F, G	62.0369	87.00	**104.40**

Biava Multirail Hidden Vent Straight - Chrome 1118mm Height

Width	Delta △T30 Watts	Delta △T30 BTU	Delta △T50 Watts	Delta △T50 BTU	Element Output	Element Type	Code	£ Ex VAT	£ Inc VAT
450mm	152	519	295	1006	150W	A, A+, B, D, E, F, G	62.0370	100.00	**120.00**
500mm	173*	589*	335*	1144*	150W	A, A+, B, D, E, F, G	62.0417	107.00	**128.40**
600mm	197	672	381	1300	300W	A, A+, B, D, E, F, G	61.0079	114.00	**136.80**
750mm	241	822	466	1590	300W	A, A+, B, D, E, F, G	61.0080	125.00	**150.00**

Biava Multirail Hidden Vent Straight - Chrome 1720mm Height

Width	Delta △T30 Watts	Delta △T30 BTU	Delta △T50 Watts	Delta △T50 BTU	Element Output	Element Type	Code	£ Ex VAT	£ Inc VAT
450mm	235	802	460	1569	300W	A, A+, B, D, E, F, G	62.0373	135.00	**162.00**
500mm	266*	909*	517*	1765*	300W	A, A+, B, D, E, F, G	62.0418	146.00	**175.20**
600mm	305	1041	595	2029	450W	A, A+, B, D, E, F, G	62.0374	157.00	**188.40**
750mm	372	1269	727	2480	600W	A, A+, B, D, E, F, G	62.0375	180.00	**216.00**

* Further heat output information available on eastbrooktrade.com **E&OA**

Gloss White

Biava Multirail Hidden Vent Straight - Gloss White 360mm Height

Width	Delta △T30 Watts	Delta △T30 BTU	Delta △T50 Watts	Delta △T50 BTU	Element Output	Element Type	Code	£ Ex VAT	£ Inc VAT
400mm	73	249	139	474	100W	A, A+, B, D, E, F, G	61.0084	39.00	**46.80**

Biava Multirail Hidden Vent Straight - Gloss White 688mm Height

Width	Delta △T30 Watts	Delta △T30 BTU	Delta △T50 Watts	Delta △T50 BTU	Element Output	Element Type	Code	£ Ex VAT	£ Inc VAT
450mm	149	509	282	962	150W	A, A+, B, D, E, F, G	62.0377	53.00	**63.60**
600mm	191	652	363	1238	150W	A, A+, B, D, E, F, G	61.0086	58.00	**69.60**
750mm	233	795	441	1504	300W	A, A+, B, D, E, F, G	61.0087	64.00	**76.80**

Biava Multirail Hidden Vent Straight - Gloss White 1118mm Height

Width	Delta △T30 Watts	Delta △T30 BTU	Delta △T50 Watts	Delta △T50 BTU	Element Output	Element Type	Code	£ Ex VAT	£ Inc VAT
450mm	238	812	454	1549	300W	A, A+, B, D, E, F, G	62.0380	70.00	**84.00**
600mm	306	1044	583	1989	300W	A, A+, B, D, E, F, G	61.0089	78.00	**93.60**
750mm	372	1269	709	2418	450W	A, A+, B, D, E, F, G	61.0090	86.00	**103.20**

Biava Multirail Hidden Vent Straight - Gloss White 1720mm Height

Width	Delta △T30 Watts	Delta △T30 BTU	Delta △T50 Watts	Delta △T50 BTU	Element Output	Element Type	Code	£ Ex VAT	£ Inc VAT
450mm	368	1255	707	2411	450W	A, A+, B, D, E, F, G	61.0091	94.00	**112.80**
600mm	473	1613	909	3100	600W	A, A+, B, D, E, F, G	61.0092	107.00	**128.40**
750mm	575	1961	1104	3765	750W	A, A+, B, D, E, F, G	61.0093	120.00	**144.00**

Matt White

Biava Multirail Hidden Vent Straight - Matt White 360mm Height

Width	Delta △T30 Watts	Delta △T30 BTU	Delta △T50 Watts	Delta △T50 BTU	Element Output	Element Type	Code	£ Ex VAT	£ Inc VAT
360mm	73	249	139	474	100W	A, A+, B, D, E, F, G	61.0114	39.00	**46.80**

Biava Multirail Hidden Vent Straight - Matt White 688mm Height

Width	Delta △T30 Watts	Delta △T30 BTU	Delta △T50 Watts	Delta △T50 BTU	Element Output	Element Type	Code	£ Ex VAT	£ Inc VAT
450mm	149	509	282	962	150W	A, A+, B, D, E, F, G	61.0115	53.00	**63.60**
600mm	191	652	363	1238	150W	A, A+, B, D, E, F, G	61.0116	58.00	**69.60**
750mm	233	795	441	1504	300W	A, A+, B, D, E, F, G	62.0409	64.00	**76.80**

Biava Multirail Hidden Vent Straight - Matt White 1118mm Height

Width	Delta △T30 Watts	Delta △T30 BTU	Delta △T50 Watts	Delta △T50 BTU	Element Output	Element Type	Code	£ Ex VAT	£ Inc VAT
450mm	238	812	454	1549	300W	A, A+, B, D, E, F, G	62.0410	70.00	**84.00**
600mm	306	1044	583	1989	300W	A, A+, B, D, E, F, G	61.0119	78.00	**93.60**
750mm	372	1269	709	2418	450W	A, A+, B, D, E, F, G	61.0120	86.00	**103.20**

Biava Multirail Hidden Vent Straight - Matt White 1720mm Height

Width	Delta △T30 Watts	Delta △T30 BTU	Delta △T50 Watts	Delta △T50 BTU	Element Output	Element Type	Code	£ Ex VAT	£ Inc VAT
450mm	368	1255	707	2411	450W	A, A+, B, D, E, F, G	62.0413	94.00	**112.80**
600mm	473	1613	909	3100	600W	A, A+, B, D, E, F, G	61.0122	107.00	**128.40**
750mm	575	1961	1104	3765	750W	A, A+, B, D, E, F, G	61.0123	120.00	**144.00**

Radiator Valves
Page 338-353

360mm High

688mm High

1118mm High

1720mm High

Multirail Range

BIAVA MULTIRAIL HIDDEN VENT (HV), STRAIGHT, MATT ANTHRACITE

Pictured 61.0099 Matt Antracite

Technical Tables & Drawings
Page 362-363

Pictured 61.0095 Matt Anthracite

Biava Multirail HV towel rail rewrites the standards with the air vent hidden at the back of the towel rail and flush finished tops.

FEATURES
- Tested to BS EN 442 standards
- Hidden air vent at the rear
- Tappings only at the bottom
- Flush finished tops
- Can be single, dual fuel or all electric
- 5 Year Manufacturer's Warranty*

* With conditions

Warranty **5** Year

Diameter (Ø) **22** MM Bars

Biava Multirail Hidden Vent Straight - Matt Anthracite 360mm Height

Width	Delta △T30 Watts	Delta △T30 BTU	Delta △T50 Watts	Delta △T50 BTU	Element Output	Element Type	Code	£ Ex VAT	£ Inc VAT
400mm	73	249	139	474	100W	A, A+, B, D, E, F, G	61.0094	39.00	**46.80**

Biava Multirail Hidden Vent Straight - Matt Anthracite 688mm Height

Width	Delta △T30 Watts	Delta △T30 BTU	Delta △T50 Watts	Delta △T50 BTU	Element Output	Element Type	Code	£ Ex VAT	£ Inc VAT
450mm	149	509	282	962	150W	A, A+, B, D, E, F, G	61.0095	53.00	**63.60**
600mm	191	652	363	1238	150W	A, A+, B, D, E, F, G	61.0096	58.00	**69.60**
750mm	233	795	441	1504	300W	A, A+, B, D, E, F, G	61.0097	64.00	**76.80**

Biava Multirail Hidden Vent Straight - Matt Anthracite 1118mm Height

Width	Delta △T30 Watts	Delta △T30 BTU	Delta △T50 Watts	Delta △T50 BTU	Element Output	Element Type	Code	£ Ex VAT	£ Inc VAT
450mm	238	812	454	1549	300W	A, A+, B, D, E, F, G	61.0098	70.00	**84.00**
600mm	306	1044	583	1989	300W	A, A+, B, D, E, F, G	61.0099	78.00	**93.60**
750mm	372	1269	709	2418	450W	A, A+, B, D, E, F, G	61.0100	86.00	**103.20**

Biava Multirail Hidden Vent Straight - Matt Anthracite 1720mm Height

Width	Delta △T30 Watts	Delta △T30 BTU	Delta △T50 Watts	Delta △T50 BTU	Element Output	Element Type	Code	£ Ex VAT	£ Inc VAT
450mm	368	1255	707	2411	450W	A, A+, B, D, E, F, G	61.0101	94.00	**112.80**
600mm	473	1613	909	3100	600W	A, A+, B, D, E, F, G	61.0102	107.00	**128.40**
750mm	575	1961	1104	3765	750W	A, A+, B, D, E, F, G	61.0103	120.00	**144.00**

Sleek, Minimalistic Tops

Rear Side Hidden Air Vent

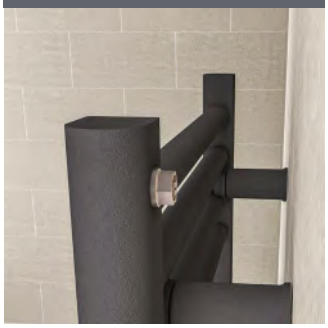

TECHNICAL INFORMATION

All measurements in Height by Width. Radiators that are electric only are restricted to the heat output of the elements. Element size can be increased to full capacity of rail if using element type B, D, E, F or G. For element types see pages 324-337. For matching valves see pages 338-353. For indirect heating systems only. Tappings are approx. 50mm less than the width of the rail and approx. 70-85mm off the wall. Price includes radiator and wall fixing sets, valves extra.

Multirail Range

BIAVA MULTIRAIL HIDDEN VENT (HV), STRAIGHT, MATT BLACK

Pictured 61.0108 Matt Black

Biava Multirail HV towel rail rewrites the standards with the air vent hidden at the back of the towel rail and flush finished tops.

FEATURES
- Tested to BS EN 442 standards
- Hidden air vent at the rear
- Tappings only at the bottom
- Flush finished tops
- Can be single, dual fuel or all electric
- 5 Year Manufacturer's Warranty*

* With conditions

Warranty 5 Year

Diameter (Ø) 22 MM Bars

Pictured 61.0112 Matt Black

Biava Multirail Hidden Vent Straight - Matt Black 360mm Height

Width	Delta △T30 Watts	Delta △T30 BTU	Delta △T50 Watts	Delta △T50 BTU	Element Output	Element Type	Code	£ Ex VAT	£ Inc VAT
400mm	73	249	139	474	100W	A, A+, B, D, E, F, G	62.0396	39.00	**46.80**

Biava Multirail Hidden Vent Straight - Matt Black 688mm Height

Width	Delta △T30 Watts	Delta △T30 BTU	Delta △T50 Watts	Delta △T50 BTU	Element Output	Element Type	Code	£ Ex VAT	£ Inc VAT
450mm	149	509	282	962	150W	A, A+, B, D, E, F, G	62.0397	53.00	**63.60**
600mm	191	652	363	1238	150W	A, A+, B, D, E, F, G	61.0106	58.00	**69.60**
750mm	233	795	441	1504	300W	A, A+, B, D, E, F, G	61.0107	64.00	**76.80**

Biava Multirail Hidden Vent Straight - Matt Black 1118mm Height

Width	Delta △T30 Watts	Delta △T30 BTU	Delta △T50 Watts	Delta △T50 BTU	Element Output	Element Type	Code	£ Ex VAT	£ Inc VAT
450mm	238	812	454	1549	300W	A, A+, B, D, E, F, G	61.0108	70.00	**84.00**
600mm	306	1044	583	1989	300W	A, A+, B, D, E, F, G	61.0109	78.00	**93.60**
750mm	372	1269	709	2418	450W	A, A+, B, D, E, F, G	61.0110	86.00	**103.20**

Biava Multirail Hidden Vent Straight - Matt Black 1720mm Height

Width	Delta △T30 Watts	Delta △T30 BTU	Delta △T50 Watts	Delta △T50 BTU	Element Output	Element Type	Code	£ Ex VAT	£ Inc VAT
450mm	368	1255	707	2411	450W	A, A+, B, D, E, F, G	61.0111	94.00	**112.80**
600mm	473	1613	909	3100	600W	A, A+, B, D, E, F, G	61.0112	107.00	**128.40**
750mm	575	1961	1104	3765	750W	A, A+, B, D, E, F, G	61.0113	120.00	**144.00**

Sleek, Minimalistic Tops

Rear Side Hidden Air Vent

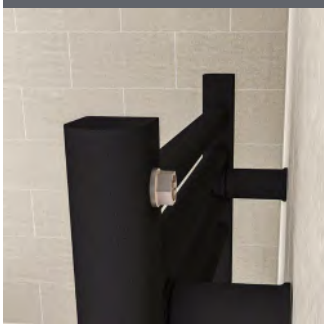

TECHNICAL INFORMATION

All measurements in Height by Width. Radiators that are electric only are restricted to the heat output of the elements. Element size can be increased to full capacity of rail if using element type B, D, E, F or G. For element types see pages 324-337. For matching valves see pages 338-353. For indirect heating systems only. Tappings are approx. 50mm less than the width of the rail and approx. 70-85mm off the wall. Price includes radiator and wall fixing sets, valves extra.

Multirail Range

WINGRAVE - STRAIGHT, CHROME

Pictured 89.1449 Chrome

Pictured 89.0095 Chrome

A contemporary straight towel radiator range which comes in chrome, matt anthracite, matt cobalt blue, matt black, matt grey, gloss white and matt white finishes. With a wide variety of sizes, this range not only adds to your bathroom with design simplicity but also keeps your towels warm.

FEATURES
- 22mm diameter horizontal round tubes
- Wide range of sizes to fit in all spaces
- Horizontal sizes to fit under windows
- Tested to BS EN 442 standards
- 5 Year manufacturer's warranty*
- Can be single or dual fuel, or all electric

* With conditions

Technical Tables & Drawings
Page 362-363

Warranty 5 Year | Diameter (Ø) 22 MM Bars | Heating | All Electric | Dual-Fuel

600mm High

800mm High

Multirail Range

WINGRAVE - STRAIGHT, CHROME

Wingrave - Straight Chrome 600mm Height

Width	Delta △T30 Watts	Delta △T30 BTU	Delta △T50 Watts	Delta △T50 BTU	Element Output	Element Type	Code	£ Ex VAT	£ Inc VAT
300mm	56	191	105	359	100W	A, A+	89.0686	90.00	**108.00**
400mm	71	243	133	454	100W	A, A+	89.0687	96.00	**115.20**
500mm	85	290	160	546	100W	A, A+, B, D, E, F, G	89.0688	107.00	**128.40**
600mm	99	338	186	635	150W	A, A+, B, D, E, F, G	89.0689	118.00	**141.60**
1000mm	150	512	283	966	150W	A, A+, B, D, F, G	89.1449	191.00	**229.20**
1200mm	175	597	330	1126	150W	A, A+, B, D, F, G	89.1450	210.00	**252.00**

Wingrave - Straight Chrome 800mm Height

Width	Delta △T30 Watts	Delta △T30 BTU	Delta △T50 Watts	Delta △T50 BTU	Element Output	Element Type	Code	£ Ex VAT	£ Inc VAT
300mm	72	246	136	464	150W	B, D, E, F, G	89.0690	96.00	**115.20**
400mm	91	311	172	587	150W	A, A+, B, D, E, F, G	89.0083	101.00	**121.20**
500mm	109	372	207	706	150W	A, A+, B, D, E, F, G	89.0088	116.00	**139.20**
600mm	127	434	241	822	150W	A, A+, B, D, E, F, G	89.0093	126.00	**151.20**

Wingrave - Straight Chrome 1000mm Height

Width	Delta △T30 Watts	Delta △T30 BTU	Delta △T50 Watts	Delta △T50 BTU	Element Output	Element Type	Code	£ Ex VAT	£ Inc VAT
300mm	88	301	168	573	150W	A, A+, B, D, E, F, G	89.0691	112.00	**134.40**
400mm	112	382	214	730	150W	A, A+, B, D, E, F, G	89.0084	121.00	**145.20**
500mm	135	461	257	877	150W	A, A+, B, D, E, F, G	89.0089	135.00	**162.00**
600mm	156	532	299	1020	150W	A, A+, B, D, E, F, G	89.0094	146.00	**175.20**

Wingrave - Straight Chrome 1200mm Height

Width	Delta △T30 Watts	Delta △T30 BTU	Delta △T50 Watts	Delta △T50 BTU	Element Output	Element Type	Code	£ Ex VAT	£ Inc VAT
300mm	105	359	203	693	150W	A, A+, B, D, E, F, G	89.0692	131.00	**157.20**
400mm	134	457	257	877	150W	A, A+, B, D, E, F, G	89.0085	139.00	**166.80**
500mm	161	550	309	1054	150W	A, A+, B, D, E, F, G	89.0090	156.00	**187.20**
600mm	187	638	359	1225	300W	A, A+, B, D, E, F, G	89.0095	174.00	**208.80**

Wingrave - Straight Chrome 1400mm Height

Width	Delta △T30 Watts	Delta △T30 BTU	Delta △T50 Watts	Delta △T50 BTU	Element Output	Element Type	Code	£ Ex VAT	£ Inc VAT
300mm	123	420	239	815	150W	A, A+, B, D, E, F, G	89.0693	168.00	**201.60**
400mm	156	532	303	1034	150W	A, A+, B, D, E, F, G	89.0530	178.00	**213.60**
500mm	188	642	364	1242	150W	A, A+, B, D, E, F, G	89.0531	193.00	**231.60**
600mm	219	747	424	1446	300W	A, A+, B, D, E, F, G	89.0532	208.00	**249.60**

Wingrave - Straight Chrome 1600mm Height

Width	Delta △T30 Watts	Delta △T30 BTU	Delta △T50 Watts	Delta △T50 BTU	Element Output	Element Type	Code	£ Ex VAT	£ Inc VAT
300mm	142	485	277	945	150W	A, A+, B, D, E, F, G	89.0694	174.00	**208.80**
400mm	180	614	352	1201	150W	A, A+, B, D, E, F, G	89.0086	185.00	**222.00**
500mm	217	740	423	1443	300W	A, A+, B, D, E, F, G	89.0091	203.00	**243.60**
600mm	252	860	492	1678	300W	A, A+, B, D, E, F, G	89.0096	219.00	**262.80**

Wingrave - Straight Chrome 1800mm Height

Width	Delta △T30 Watts	Delta △T30 BTU	Delta △T50 Watts	Delta △T50 BTU	Element Output	Element Type	Code	£ Ex VAT	£ Inc VAT
300mm	163	556	318	1085	150W	A, A+, B, D, E, F, G	89.0695	192.00	**230.40**
400mm	206	703	404	1378	300W	A, A+, B, D, E, F, G	89.0087	205.00	**246.00**
500mm	247	843	486	1658	300W	A, A+, B, D, E, F, G	89.0092	229.00	**274.80**
600mm	288	983	565	1927	450W	A, A+, B, D, E, F, G	89.0097	246.00	**295.20**

Tube Diameter
22mm

Robe Hooks & Hangers
Page 355

Multi-Rail Hangers
Page 355-356

Vent Caps
Page 357

TECHNICAL INFORMATION

All measurements in Height by Width. Radiators that are electric only are restricted to the heat output of the elements. Element size can be increased to full capacity of rail if using element type B, D, E, F or G. For element types see pages 324-337. For matching valves see pages 338-353. For indirect heating systems only. Tappings are approx. 44mm less than the width of the rail and approx. 65mm off the wall. Price includes radiator and wall fixing sets, valves extra.

1000mm High

1200mm High

1400mm High

1600mm High

1800mm High

Multirail Range

WINGRAVE - STRAIGHT, GLOSS WHITE

Pictured 89.0127 Gloss White

Pictured 89.0122 Gloss White

A contemporary straight towel radiator range which comes in chrome, matt anthracite, matt cobalt blue, matt black, matt grey, gloss white and matt white finishes. With a wide variety of sizes, this range not only adds to your bathroom with design simplicity but also keeps your towels warm.

FEATURES

- 22mm diameter horizontal round tubes
- Wide range of sizes to fit in all spaces
- Horizontal sizes to fit under windows
- Tested to BS EN 442 standards
- 5 Year manufacturer's warranty*
- Can be single or dual fuel, or all electric

* With conditions

Technical Tables & Drawings
Page 362-363

600mm High

800mm High

Warranty 5 Year | Diameter (Ø) 22 MM Bars | Heating | All Electric | Dual-Fuel

Multirail Range

WINGRAVE - STRAIGHT, GLOSS WHITE

Wingrave - Straight Gloss White 600mm Height

Width	Delta △T30 Watts	Delta △T30 BTU	Delta △T50 Watts	Delta △T50 BTU	Element Output	Element Type	Code	£ Ex VAT	£ Inc VAT
300mm	87	297	163	556	100W	A, A+, B, D, E, F, G	89.0646	60.00	**72.00**
400mm	110	376	206	703	150W	A, A+, B, D, E, F, G	89.0647	61.00	**73.20**
500mm	132	451	247	843	150W	A, A+, B, D, E, F, G	89.0648	65.00	**78.00**
600mm	153	522	286	976	150W	A, A+, B, D, E, F, G	89.0649	69.00	**82.80**
1000mm	231	788	434	1480	300W	A, A+, B, D, F, G	89.1439	125.00	**150.00**
1200mm	268	914	503	1716	300W	A, A+, B, D, F, G	89.1440	137.00	**164.40**

Wingrave - Straight Gloss White 800mm Height

Width	Delta △T30 Watts	Delta △T30 BTU	Delta △T50 Watts	Delta △T50 BTU	Element Output	Element Type	Code	£ Ex VAT	£ Inc VAT
300mm	113	386	213	727	150W	A, A+, B, D, E, F, G	89.0650	61.00	**73.20**
400mm	143	488	269	918	150W	A, A+, B, D, E, F, G	89.0113	69.00	**82.80**
500mm	171	584	322	1099	150W	A, A+, B, D, E, F, G	89.0118	73.00	**87.60**
600mm	198	676	374	1276	300W	A, A+, B, D, E, F, G	89.0123	78.00	**93.60**

Wingrave - Straight Gloss White 1000mm Height

Width	Delta △T30 Watts	Delta △T30 BTU	Delta △T50 Watts	Delta △T50 BTU	Element Output	Element Type	Code	£ Ex VAT	£ Inc VAT
300mm	139	474	264	901	150W	A, A+, B, D, E, F, G	89.0651	69.00	**82.80**
400mm	176	601	333	1136	150W	A, A+, B, D, E, F, G	89.0114	78.00	**93.60**
500mm	211	720	400	1364	300W	A, A+, B, D, E, F, G	89.0119	84.00	**100.80**
600mm	245	836	464	1583	300W	A, A+, B, D, E, F, G	89.0124	89.00	**106.80**

Wingrave - Straight Gloss White 1200mm Height

Width	Delta △T30 Watts	Delta △T30 BTU	Delta △T50 Watts	Delta △T50 BTU	Element Output	Element Type	Code	£ Ex VAT	£ Inc VAT
300mm	167	570	317	1081	150W	A, A+, B, D, E, F, G	89.0652	79.00	**94.80**
400mm	210	717	400	1364	300W	A, A+, B, D, E, F, G	89.0115	89.00	**106.80**
500mm	252	860	480	1637	300W	A, A+, B, D, E, F, G	89.0120	92.00	**110.40**
600mm	293	1000	557	1900	300W	A, A+, B, D, E, F, G	89.0125	100.00	**120.00**

Wingrave - Straight Gloss White 1400mm Height

Width	Delta △T30 Watts	Delta △T30 BTU	Delta △T50 Watts	Delta △T50 BTU	Element Output	Element Type	Code	£ Ex VAT	£ Inc VAT
300mm	195	665	372	1269	150W	A, A+, B, D, E, F, G	89.0653	96.00	**115.20**
400mm	246	839	470	1603	300W	A, A+, B, D, E, F, G	89.0536	102.00	**122.40**
500mm	295	1006	564	1924	300W	A, A+, B, D, E, F, G	89.0537	110.00	**132.00**
600mm	342	1167	654	2231	450W	A, A+, B, D, E, F, G	89.0538	121.00	**145.20**

Wingrave - Straight Gloss White 1600mm Height

Width	Delta △T30 Watts	Delta △T30 BTU	Delta △T50 Watts	Delta △T50 BTU	Element Output	Element Type	Code	£ Ex VAT	£ Inc VAT
300mm	224	764	429	1463	300W	A, A+, B, D, E, F, G	89.0654	97.00	**116.40**
400mm	283	966	543	1852	300W	A, A+, B, D, E, F, G	89.0116	107.00	**128.40**
500mm	339	1156	651	2220	450W	A, A+, B, D, E, F, G	89.0121	118.00	**141.60**
600mm	393	1341	755	2575	450W	A, A+, B, D, E, F, G	89.0126	126.00	**151.20**

Wingrave - Straight Gloss White 1800mm Height

Width	Delta △T30 Watts	Delta △T30 BTU	Delta △T50 Watts	Delta △T50 BTU	Element Output	Element Type	Code	£ Ex VAT	£ Inc VAT
300mm	254	867	490	1671	300W	A, A+, B, D, E, F, G	89.0655	107.00	**128.40**
400mm	321	1095	619	2111	450W	A, A+, B, D, E, F, G	89.0117	121.00	**145.20**
500mm	385	1313	742	2531	450W	A, A+, B, D, E, F, G	89.0122	137.00	**164.40**
600mm	446	1521	861	2937	600W	A, A+, B, D, E, F, G	89.0127	138.00	**165.60**

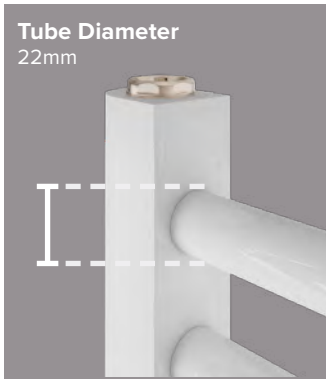

Vent Caps
Page 357

Multi-Rail Hangers
Page 355-356

Robe Hooks & Hangers
Page 355

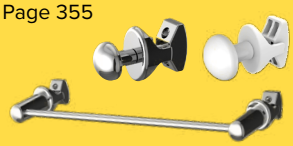

TECHNICAL INFORMATION

All measurements in Height by Width. Radiators that are electric only are restricted to the heat output of the elements. Element size can be increased to full capacity of rail if using element type B, D, E, F or G. For element types see pages 324-337. For matching valves see pages 338-353. For indirect heating systems only. Tappings are approx. 44mm less than the width of the rail and approx. 65mm off the wall. Price includes radiator and wall fixing sets, valves extra.

1000mm High

1200mm High

1400mm High

1600mm High

1800mm High

Multirail Range

WINGRAVE - STRAIGHT, MATT WHITE

Pictured 89.0066 Matt White

Pictured 89.1441 Matt White

A contemporary straight towel radiator range which comes in chrome, matt anthracite, matt cobalt blue, matt black, matt grey, gloss white and matt white finishes. With a wide variety of sizes, this range not only adds to your bathroom with design simplicity but also keeps your towels warm.

FEATURES
- 22mm diameter horizontal round tubes
- Wide range of sizes to fit in all spaces
- Horizontal sizes to fit under windows
- Tested to BS EN 442 standards
- 5 Year manufacturer's warranty*
- Can be single or dual fuel, or all electric

* With conditions

Technical Tables & Drawings
Page 362-363

Warranty 5 Year | Diameter (Ø) 22 MM Bars | Heating | All Electric | Dual-Fuel

600mm High

800mm High

Multirail Range

WINGRAVE - STRAIGHT, MATT WHITE

Wingrave - Straight Matt White 600mm Height

Width	Delta △T30 Watts	Delta △T30 BTU	Delta △T50 Watts	Delta △T50 BTU	Element Output	Element Type	Code	£ Ex VAT	£ Inc VAT
300mm	87	297	163	556	100W	A, A+, B, D, E, F, G	89.0656	61.00	**73.20**
400mm	110	376	206	703	150W	A, A+, B, D, E, F, G	89.0657	63.00	**75.60**
500mm	132	451	247	843	150W	A, A+, B, D, E, F, G	89.0658	69.00	**82.80**
600mm	153	522	286	976	150W	A, A+, B, D, E, F, G	89.0659	72.00	**82.80**
1000mm	231	788	434	1480	300W	A, A+, B, D, F, G	89.1441	125.00	**150.00**
1200mm	268	914	503	1716	300W	A, A+, B, D, F, G	89.1442	137.00	**164.40**

Wingrave - Straight Matt White 800mm Height

Width	Delta △T30 Watts	Delta △T30 BTU	Delta △T50 Watts	Delta △T50 BTU	Element Output	Element Type	Code	£ Ex VAT	£ Inc VAT
300mm	113	386	213	727	150W	A, A+, B, D, E, F, G	89.0660	63.00	**75.60**
400mm	143	488	269	918	150W	A, A+, B, D, E, F, G	89.0053	74.00	**88.80**
500mm	171	584	322	1099	150W	A, A+, B, D, E, F, G	89.0058	80.00	**96.00**
600mm	198	676	374	1276	300W	A, A+, B, D, E, F, G	89.0063	84.00	**100.80**

Wingrave - Straight Matt White 1000mm Height

Width	Delta △T30 Watts	Delta △T30 BTU	Delta △T50 Watts	Delta △T50 BTU	Element Output	Element Type	Code	£ Ex VAT	£ Inc VAT
300mm	139	474	264	901	150W	A, A+, B, D, E, F, G	89.0661	72.00	**86.40**
400mm	176	601	333	1136	150W	A, A+, B, D, E, F, G	89.0054	84.00	**100.80**
500mm	211	720	400	1364	300W	A, A+, B, D, E, F, G	89.0059	90.00	**108.00**
600mm	245	836	464	1583	300W	A, A+, B, D, E, F, G	89.0064	97.00	**116.40**

Wingrave - Straight Matt White 1200mm Height

Width	Delta △T30 Watts	Delta △T30 BTU	Delta △T50 Watts	Delta △T50 BTU	Element Output	Element Type	Code	£ Ex VAT	£ Inc VAT
300mm	167	570	317	1081	150W	A, A+, B, D, E, F, G	89.0662	83.00	**99.60**
400mm	210	717	400	1364	300W	A, A+, B, D, E, F, G	89.0055	97.00	**116.40**
500mm	252	860	480	1637	300W	A, A+, B, D, E, F, G	89.0060	101.00	**121.20**
600mm	293	1000	557	1900	300W	A, A+, B, D, E, F, G	89.0065	109.00	**130.80**

Wingrave - Straight Matt White 1400mm Height

Width	Delta △T30 Watts	Delta △T30 BTU	Delta △T50 Watts	Delta △T50 BTU	Element Output	Element Type	Code	£ Ex VAT	£ Inc VAT
300mm	195	665	372	1269	150W	A, A+, B, D, E, F, G	89.0663	96.00	**115.20**
400mm	246	839	470	1603	300W	A, A+, B, D, E, F, G	89.0539	109.00	**130.80**
500mm	295	1006	564	1924	300W	A, A+, B, D, E, F, G	89.0540	118.00	**141.60**
600mm	342	1167	654	2231	450W	A, A+, B, D, E, F, G	89.0541	126.00	**151.20**

Wingrave - Straight Matt White 1600mm Height

Width	Delta △T30 Watts	Delta △T30 BTU	Delta △T50 Watts	Delta △T50 BTU	Element Output	Element Type	Code	£ Ex VAT	£ Inc VAT
300mm	224	764	429	1463	300W	A, A+, B, D, E, F, G	89.0664	100.00	**120.00**
400mm	283	966	543	1852	300W	A, A+, B, D, E, F, G	89.0056	119.00	**142.80**
500mm	339	1156	651	2220	450W	A, A+, B, D, E, F, G	89.0061	128.00	**153.60**
600mm	393	1341	755	2575	450W	A, A+, B, D, E, F, G	89.0066	135.00	**162.00**

Wingrave - Straight Matt White 1800mm Height

Width	Delta △T30 Watts	Delta △T30 BTU	Delta △T50 Watts	Delta △T50 BTU	Element Output	Element Type	Code	£ Ex VAT	£ Inc VAT
300mm	254	867	490	1671	300W	A, A+, B, D, E, F, G	89.0665	112.00	**134.40**
400mm	321	1095	619	2111	450W	A, A+, B, D, E, F, G	89.0057	130.00	**156.00**
500mm	385	1313	742	2531	450W	A, A+, B, D, E, F, G	89.0062	153.00	**183.60**
600mm	446	1521	861	2937	600W	A, A+, B, D, E, F, G	89.0067	154.00	**184.80**

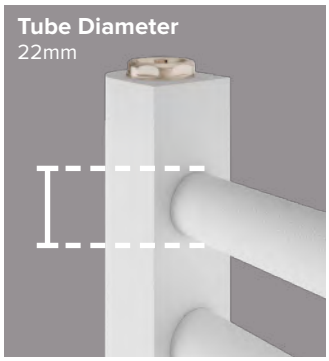

Vent Caps
Page 357

Multi-Rail Hangers
Page 355-356

Robe Hooks & Hangers
Page 355

TECHNICAL INFORMATION

All measurements in Height by Width. Radiators that are electric only are restricted to the heat output of the elements. Element size can be increased to full capacity of rail if using element type B, D, E, F or G. For element types see pages 324-337. For matching valves see pages 338-353. For indirect heating systems only. Tappings are approx. 44mm less than the width of the rail and approx. 65mm off the wall. Price includes radiator and wall fixing sets, valves extra.

1000mm High

1200mm High

1400mm High

1600mm High

1800mm High

Multirail Range

WINGRAVE - STRAIGHT, MATT ANTHRACITE

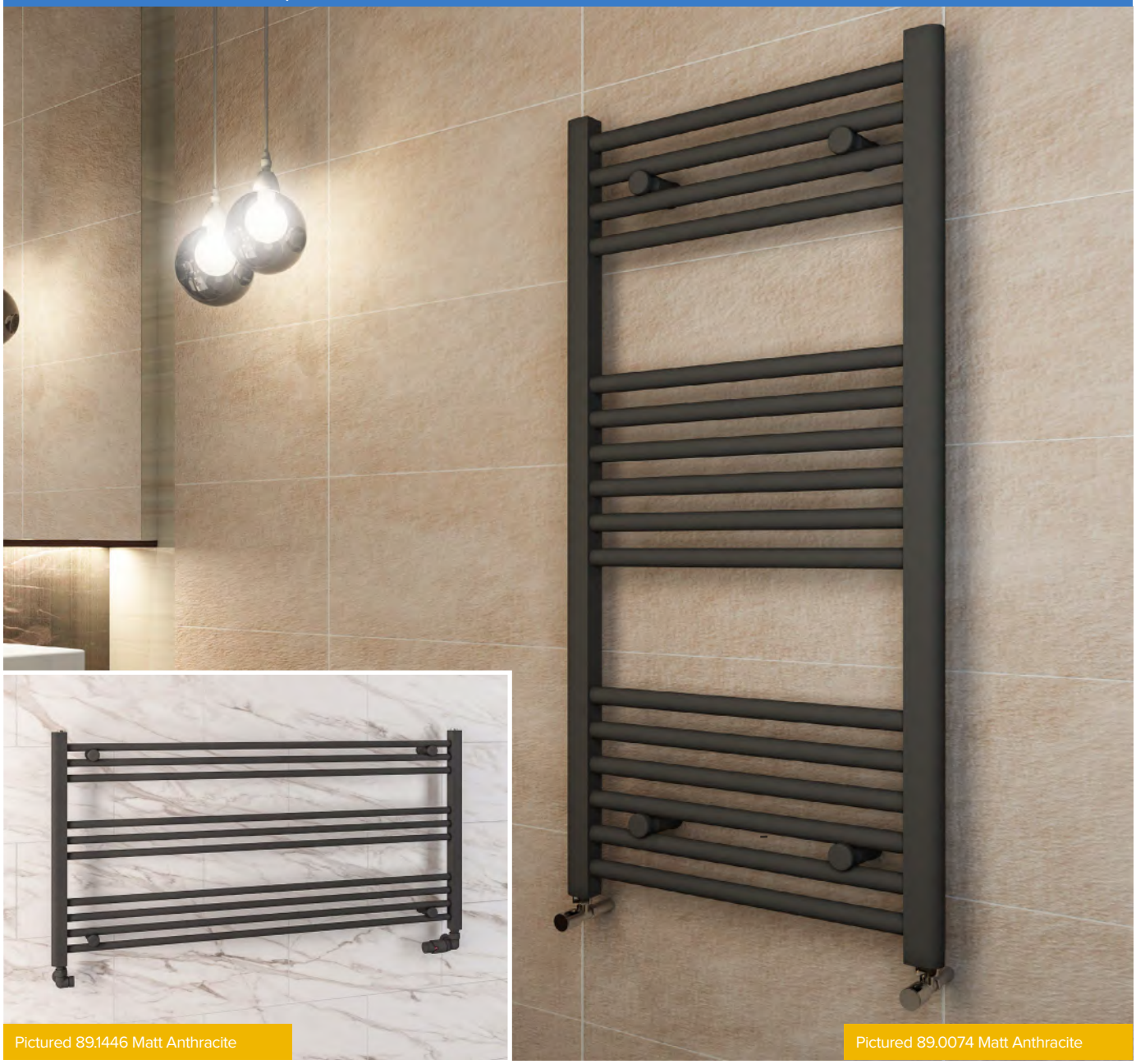

Pictured 89.1446 Matt Anthracite

Pictured 89.0074 Matt Anthracite

A contemporary straight towel radiator range which comes in chrome, matt anthracite, matt cobalt blue, matt black, matt grey, gloss white and matt white finishes. With a wide variety of sizes, this range not only adds to your bathroom with design simplicity but also keeps your towels warm.

FEATURES

- 22mm diameter horizontal round tubes
- Wide range of sizes to fit in all spaces
- Horizontal sizes to fit under windows
- Tested to BS EN 442 standards
- 5 Year manufacturer's warranty*
- Can be single or dual fuel, or all electric

* With conditions

Technical Tables & Drawings
Page 362-363

Warranty 5 Year | Diameter (Ø) 22 MM Bars | Heating | All Electric | Dual-Fuel

600mm High

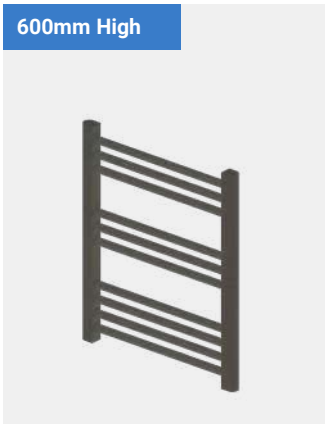

800mm High

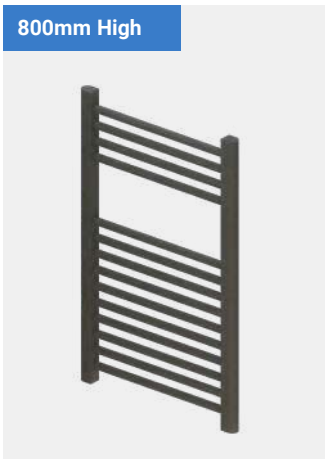

Multirail Range

WINGRAVE - STRAIGHT, MATT ANTHRACITE

Wingrave - Straight Matt Anthracite 600mm Height

Width	Delta △T30 Watts	Delta △T30 BTU	Delta △T50 Watts	Delta △T50 BTU	Element Output	Element Type	Code	£ Ex VAT	£ Inc VAT
300mm	87	297	163	556	100W	A, A+, B, D, E, F, G	89.0666	61.00	**73.20**
400mm	110	376	206	703	150W	A, A+, B, D, E, F, G	89.0667	63.00	**75.60**
500mm	132	451	247	843	150W	A, A+, B, D, E, F, G	89.0668	69.00	**82.80**
600mm	153	522	286	976	150W	A, A+, B, D, E, F, G	89.0669	72.00	**86.40**
1000mm	231	788	434	1480	300W	A, A+, B, D, F, G	89.1445	125.00	**150.00**
1200mm	268	914	503	1716	300W	A, A+, B, D, F, G	89.1446	137.00	**164.40**

Wingrave - Straight Matt Anthracite 800mm Height

Width	Delta △T30 Watts	Delta △T30 BTU	Delta △T50 Watts	Delta △T50 BTU	Element Output	Element Type	Code	£ Ex VAT	£ Inc VAT
300mm	113	386	213	727	150W	A, A+, B, D, E, F, G	89.0670	63.00	**75.60**
400mm	143	488	269	918	150W	A, A+, B, D, E, F, G	89.0068	74.00	**88.80**
500mm	171	584	322	1099	150W	A, A+, B, D, E, F, G	89.0073	80.00	**96.00**
600mm	198	676	374	1276	300W	A, A+, B, D, E, F, G	89.0078	84.00	**100.80**

Wingrave - Straight Matt Anthracite 1000mm Height

Width	Delta △T30 Watts	Delta △T30 BTU	Delta △T50 Watts	Delta △T50 BTU	Element Output	Element Type	Code	£ Ex VAT	£ Inc VAT
300mm	139	474	264	901	150W	A, A+, B, D, E, F, G	89.0671	72.00	**86.40**
400mm	176	601	333	1136	150W	A, A+, B, D, E, F, G	89.0069	84.00	**100.80**
500mm	211	720	400	1364	300W	A, A+, B, D, E, F, G	89.0074	90.00	**108.00**
600mm	245	836	464	1583	300W	A, A+, B, D, E, F, G	89.0079	97.00	**116.40**

Wingrave - Straight Matt Anthracite 1200mm Height

Width	Delta △T30 Watts	Delta △T30 BTU	Delta △T50 Watts	Delta △T50 BTU	Element Output	Element Type	Code	£ Ex VAT	£ Inc VAT
300mm	167	570	317	1081	150W	A, A+, B, D, E, F, G	89.0672	83.00	**99.60**
400mm	210	717	400	1364	300W	A, A+, B, D, E, F, G	89.0070	97.00	**116.40**
500mm	252	860	480	1637	300W	A, A+, B, D, E, F, G	89.0075	101.00	**121.20**
600mm	293	1000	557	1900	300W	A, A+, B, D, E, F, G	89.0080	109.00	**130.80**

Wingrave - Straight Matt Anthracite 1400mm Height

Width	Delta △T30 Watts	Delta △T30 BTU	Delta △T50 Watts	Delta △T50 BTU	Element Output	Element Type	Code	£ Ex VAT	£ Inc VAT
300mm	195	665	372	1269	150W	A, A+, B, D, E, F, G	89.0673	96.00	**115.20**
400mm	246	839	470	1603	300W	A, A+, B, D, E, F, G	89.0533	109.00	**130.80**
500mm	295	1006	564	1924	300W	A, A+, B, D, E, F, G	89.0534	118.00	**141.60**
600mm	342	1167	654	2231	450W	A, A+, B, D, E, F, G	89.0535	126.00	**151.20**

Wingrave - Straight Matt Anthracite 1600mm Height

Width	Delta △T30 Watts	Delta △T30 BTU	Delta △T50 Watts	Delta △T50 BTU	Element Output	Element Type	Code	£ Ex VAT	£ Inc VAT
300mm	224	764	429	1463	300W	A, A+, B, D, E, F, G	89.0674	100.00	**120.00**
400mm	283	966	543	1852	300W	A, A+, B, D, E, F, G	89.0071	119.00	**142.80**
500mm	339	1156	651	2220	450W	A, A+, B, D, E, F, G	89.0076	128.00	**153.60**
600mm	393	1341	755	2575	450W	A, A+, B, D, E, F, G	89.0081	135.00	**162.00**

Wingrave - Straight Matt Anthracite 1800mm Height

Width	Delta △T30 Watts	Delta △T30 BTU	Delta △T50 Watts	Delta △T50 BTU	Element Output	Element Type	Code	£ Ex VAT	£ Inc VAT
300mm	254	867	490	1671	300W	A, A+, B, D, E, F, G	89.0675	112.00	**134.40**
400mm	321	1095	619	2111	450W	A, A+, B, D, E, F, G	89.0072	130.00	**156.00**
500mm	385	1313	742	2531	450W	A, A+, B, D, E, F, G	89.0077	153.00	**183.60**
600mm	446	1521	861	2937	600W	A, A+, B, D, E, F, G	89.0082	154.00	**184.80**

Tube Diameter
22mm

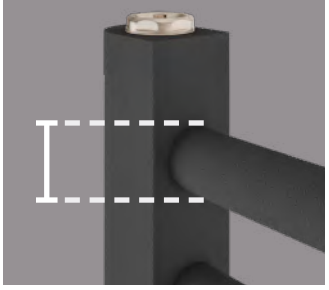

Robe Hooks & Hangers
Page 355

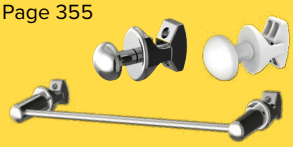

Multi-Rail Hangers
Page 355-356

Vent Caps
Page 357

TECHNICAL INFORMATION

All measurements in Height by Width. Radiators that are electric only are restricted to the heat output of the elements. Element size can be increased to full capacity of rail if using element type B, D, E, F or G. For element types see pages 324-337. For matching valves see pages 338-353. For indirect heating systems only. Tappings are approx. 44mm less than the width of the rail and approx. 65mm off the wall. Price includes radiator and wall fixing sets, valves extra.

1000mm High

1200mm High

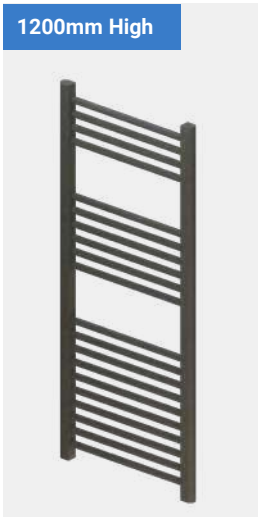

1400mm High

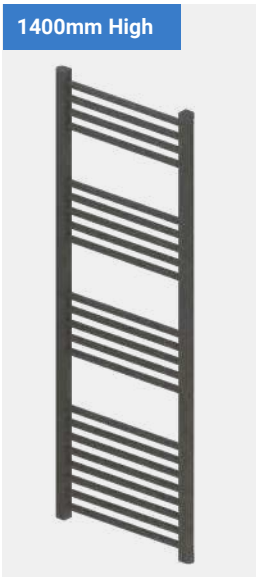

1600mm High

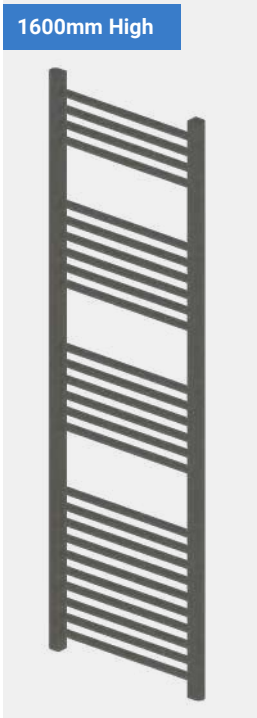

1800mm High

Multirail Range

WINGRAVE - STRAIGHT, MATT BLACK

Pictured 89.1447 Matt Black

Pictured 89.0606 Matt Black

A contemporary straight towel radiator range which comes in chrome, matt anthracite, matt cobalt blue, matt black, matt grey, gloss white and matt white finishes. With a wide variety of sizes, this range not only adds to your bathroom with design simplicity but also keeps your towels warm.

FEATURES

- 22mm diameter horizontal round tubes
- Wide range of sizes to fit in all spaces
- Horizontal sizes to fit under windows
- Tested to BS EN 442 standards
- 5 Year manufacturer's warranty*
- Can be single or dual fuel, or all electric

* With conditions

Technical Tables & Drawings
Page 362-363

Warranty 5 Year | Diameter (Ø) 22 MM Bars | Heating | All Electric | Dual-Fuel

600mm High

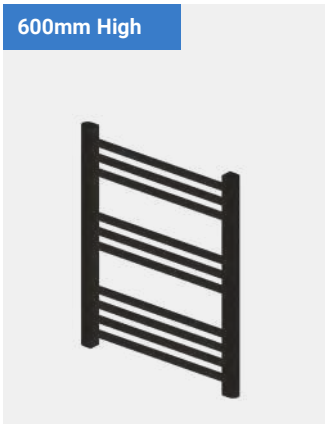

800mm High

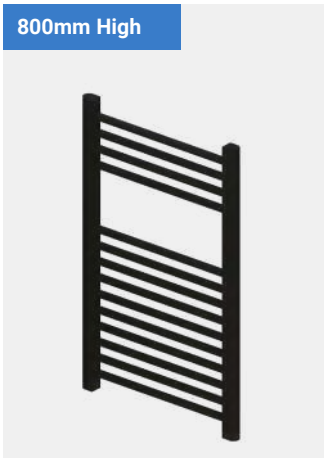

Multirail Range

WINGRAVE - STRAIGHT, MATT BLACK

Wingrave - Straight Matt Black 600mm Height

Width	Delta △T30 Watts	Delta △T30 BTU	Delta △T50 Watts	Delta △T50 BTU	Element Output	Element Type	Code	£ Ex VAT	£ Inc VAT
300mm	87	297	163	556	100W	A, A+, B, D, E, F, G	89.0676	61.00	**73.20**
400mm	110	376	206	703	150W	A, A+, B, D, E, F, G	89.0677	63.00	**75.60**
500mm	132	451	247	843	150W	A, A+, B, D, E, F, G	89.0678	69.00	**82.80**
600mm	153	522	286	976	150W	A, A+, B, D, E, F, G	89.0679	72.00	**86.40**
1000mm	231	788	434	1480	300W	A, A+, B, D, F, G	89.1447	125.00	**150.00**
1200mm	268	914	503	1716	300W	A, A+, B, D, F, G	89.1448	137.00	**164.40**

Wingrave - Straight Matt Black 800mm Height

Width	Delta △T30 Watts	Delta △T30 BTU	Delta △T50 Watts	Delta △T50 BTU	Element Output	Element Type	Code	£ Ex VAT	£ Inc VAT
300mm	113	386	213	727	150W	A, A+, B, D, E, F, G	89.0680	63.00	**75.60**
400mm	143	488	269	918	150W	A, A+, B, D, E, F, G	89.0596	74.00	**88.80**
500mm	171	584	322	1099	150W	A, A+, B, D, E, F, G	89.0597	80.00	**96.00**
600mm	198	676	374	1276	300W	A, A+, B, D, E, F, G	89.0598	84.00	**100.80**

Wingrave - Straight Matt Black 1000mm Height

Width	Delta △T30 Watts	Delta △T30 BTU	Delta △T50 Watts	Delta △T50 BTU	Element Output	Element Type	Code	£ Ex VAT	£ Inc VAT
300mm	139	474	264	901	150W	A, A+, B, D, E, F, G	89.0681	72.00	**86.40**
400mm	176	601	333	1136	150W	A, A+, B, D, E, F, G	89.0599	84.00	**100.80**
500mm	211	720	400	1364	300W	A, A+, B, D, E, F, G	89.0600	90.00	**108.00**
600mm	245	836	464	1583	300W	A, A+, B, D, E, F, G	89.0601	97.00	**116.40**

Wingrave - Straight Matt Black 1200mm Height

Width	Delta △T30 Watts	Delta △T30 BTU	Delta △T50 Watts	Delta △T50 BTU	Element Output	Element Type	Code	£ Ex VAT	£ Inc VAT
300mm	167	570	317	1081	150W	A, A+, B, D, E, F, G	89.0682	83.00	**99.60**
400mm	210	717	400	1364	300W	A, A+, B, D, E, F, G	89.0602	97.00	**116.40**
500mm	252	860	480	1637	300W	A, A+, B, D, E, F, G	89.0603	101.00	**121.20**
600mm	293	1000	557	1900	300W	A, A+, B, D, E, F, G	89.0604	109.00	**130.80**

Wingrave - Straight Matt Black 1400mm Height

Width	Delta △T30 Watts	Delta △T30 BTU	Delta △T50 Watts	Delta △T50 BTU	Element Output	Element Type	Code	£ Ex VAT	£ Inc VAT
300mm	195	665	372	1269	150W	A, A+, B, D, E, F, G	89.0683	96.00	**115.20**
400mm	246	839	470	1603	300W	A, A+, B, D, E, F, G	89.0605	109.00	**130.80**
500mm	295	1006	564	1924	300W	A, A+, B, D, E, F, G	89.0606	118.00	**141.60**
600mm	342	1167	654	2231	450W	A, A+, B, D, E, F, G	89.0607	126.00	**151.20**

Wingrave - Straight Matt Black 1600mm Height

Width	Delta △T30 Watts	Delta △T30 BTU	Delta △T50 Watts	Delta △T50 BTU	Element Output	Element Type	Code	£ Ex VAT	£ Inc VAT
300mm	224	764	429	1463	300W	A, A+, B, D, E, F, G	89.0684	100.00	**120.00**
400mm	283	966	543	1852	300W	A, A+, B, D, E, F, G	89.0608	119.00	**142.80**
500mm	339	1156	651	2220	450W	A, A+, B, D, E, F, G	89.0609	128.00	**153.60**
600mm	393	1341	755	2575	450W	A, A+, B, D, E, F, G	89.0610	135.00	**162.00**

Wingrave - Straight Matt Black 1800mm Height

Width	Delta △T30 Watts	Delta △T30 BTU	Delta △T50 Watts	Delta △T50 BTU	Element Output	Element Type	Code	£ Ex VAT	£ Inc VAT
300mm	254	867	490	1671	300W	A, A+, B, D, E, F, G	89.0685	112.00	**134.40**
400mm	321	1095	619	2111	450W	A, A+, B, D, E, F, G	89.0611	130.00	**156.00**
500mm	385	1313	742	2531	450W	A, A+, B, D, E, F, G	89.0612	153.00	**183.60**
600mm	446	1521	861	2937	600W	A, A+, B, D, E, F, G	89.0613	154.00	**184.80**

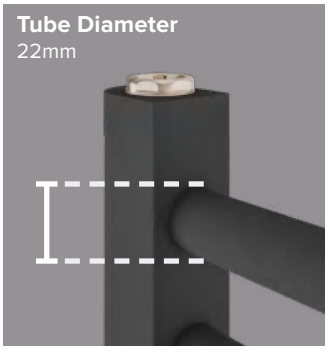

Robe Hooks & Hangers
Page 355

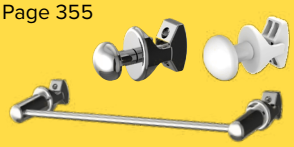

Multi-Rail Hangers
Page 355-356

Vent Caps
Page 357

TECHNICAL INFORMATION

All measurements in Height by Width. Radiators that are electric only are restricted to the heat output of the elements. Element size can be increased to full capacity of rail if using element type B, D, E, F or G. For element types see pages 324-337. For matching valves see pages 338-353. For indirect heating systems only. Tappings are approx. 44mm less than the width of the rail and approx. 65mm off the wall. Price includes radiator and wall fixing sets, valves extra.

1000mm High

1200mm High

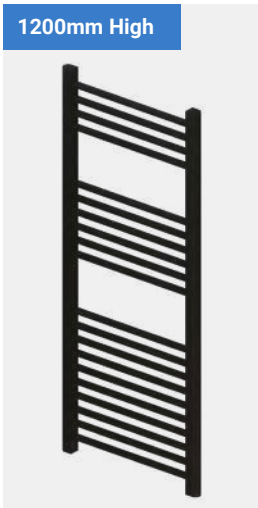

1400mm High

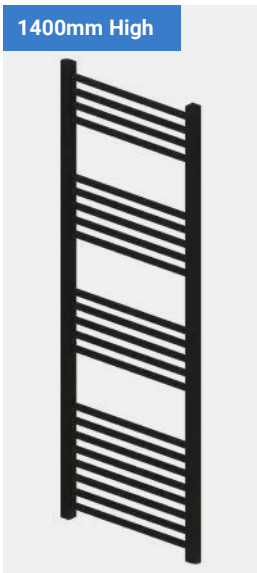

1600mm High

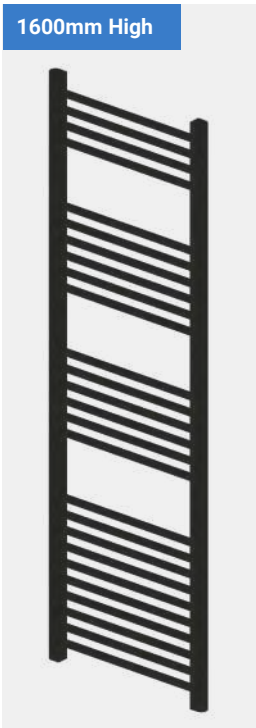

1800mm High

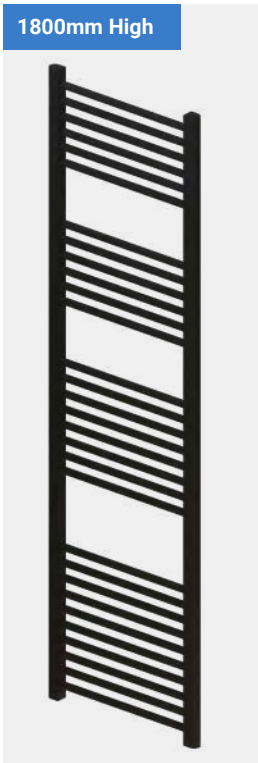

Multirail Range

WINGRAVE - STRAIGHT, MATT GREY

Pictured 89.1443 Matt Grey

A contemporary straight towel radiator range which comes in chrome, matt anthracite, matt cobalt blue, matt black, matt grey, gloss white and matt white finishes. With a wide variety of sizes, this range not only adds to your bathroom with design simplicity but also keeps your towels warm.

FEATURES

- 22mm diameter horizontal round tubes
- Wide range of sizes to fit in all spaces
- Horizontal sizes to fit under windows
- Tested to BS EN 442 standards
- 5 Year manufacturer's warranty*
- Can be single or dual fuel, or all electric

* With conditions

Technical Tables & Drawings
Page 362-363

Warranty 5 Year | Diameter (Ø) 22 MM Bars | Heating | All Electric | Dual-Fuel

Pictured 89.1425 Matt Grey

Wingrave - Straight Matt Grey 600mm Height

Width	Delta △T30 Watts	Delta △T30 BTU	Delta △T50 Watts	Delta △T50 BTU	Element Output	Element Type	Code	£ Ex VAT	£ Inc VAT
300mm	87	297	163	556	100W	A, A+, B, D, E, F, G	89.1411	61.00	**73.20**
400mm	110	376	206	703	150W	A, A+, B, D, E, F, G	89.1412	63.00	**75.60**
500mm	132	451	247	843	150W	A, A+, B, D, E, F, G	89.1413	69.00	**82.80**
600mm	153	522	286	976	150W	A, A+, B, D, E, F, G	89.1414	72.00	**86.40**
1000mm	231	788	434	1480	300W	A, A+, B, D, F, G	89.1443	125.00	**150.00**
1200mm	268	914	503	1716	300W	A, A+, B, D, F, G	89.1444	137.00	**164.40**

Wingrave - Straight Matt Grey 800mm Height

Width	Delta △T30 Watts	Delta △T30 BTU	Delta △T50 Watts	Delta △T50 BTU	Element Output	Element Type	Code	£ Ex VAT	£ Inc VAT
300mm	113	386	213	727	150W	A, A+, B, D, E, F, G	89.1415	63.00	**75.60**
400mm	143	488	269	918	150W	A, A+, B, D, E, F, G	89.1416	74.00	**88.80**
500mm	171	584	322	1099	150W	A, A+, B, D, E, F, G	89.1417	80.00	**96.00**
600mm	198	676	374	1276	300W	A, A+, B, D, E, F, G	89.1418	84.00	**100.80**

Wingrave - Straight Matt Grey 1000mm Height

Width	Delta △T30 Watts	Delta △T30 BTU	Delta △T50 Watts	Delta △T50 BTU	Element Output	Element Type	Code	£ Ex VAT	£ Inc VAT
300mm	139	474	264	901	150W	A, A+, B, D, E, F, G	89.1419	72.00	**86.40**
400mm	176	601	333	1136	150W	A, A+, B, D, E, F, G	89.1420	84.00	**100.80**
500mm	211	720	400	1364	300W	A, A+, B, D, E, F, G	89.1421	90.00	**108.00**
600mm	245	836	464	1583	300W	A, A+, B, D, E, F, G	89.1422	97.00	**116.40**

TECHNICAL INFORMATION

All measurements in Height by Width. Radiators that are electric only are restricted to the heat output of the elements. Element size can be increased to full capacity of rail if using element type B, D, E, F or G. For element types see pages 324-337. For matching valves see pages 338-353. For indirect heating systems only. Tappings are approx. 44mm less than the width of the rail and approx. 65mm off the wall. Price includes radiator and wall fixing sets, valves extra.

Wingrave - Straight Matt Grey 1200mm Height

Width	Delta △T30 Watts	Delta △T30 BTU	Delta △T50 Watts	Delta △T50 BTU	Element Output	Element Type	Code	£ Ex VAT	£ Inc VAT
300mm	167	570	317	1081	150W	A, A+, B, D, E, F, G	89.1423	83.00	**99.60**
400mm	210	717	400	1364	300W	A, A+, B, D, E, F, G	89.1424	97.00	**116.40**
500mm	252	860	480	1637	300W	A, A+, B, D, E, F, G	89.1425	101.00	**121.20**
600mm	293	1000	557	1900	300W	A, A+, B, D, E, F, G	89.1426	109.00	**130.80**

Wingrave - Straight Matt Grey 1400mm Height

Width	Delta △T30 Watts	Delta △T30 BTU	Delta △T50 Watts	Delta △T50 BTU	Element Output	Element Type	Code	£ Ex VAT	£ Inc VAT
300mm	195	665	372	1269	150W	A, A+, B, D, E, F, G	89.1427	96.00	**115.20**
400mm	246	839	470	1603	300W	A, A+, B, D, E, F, G	89.1428	109.00	**130.80**
500mm	295	1006	564	1924	300W	A, A+, B, D, E, F, G	89.1429	118.00	**141.60**
600mm	342	1167	654	2231	450W	A, A+, B, D, E, F, G	89.1430	126.00	**151.20**

Wingrave - Straight Matt Grey 1600mm Height

Width	Delta △T30 Watts	Delta △T30 BTU	Delta △T50 Watts	Delta △T50 BTU	Element Output	Element Type	Code	£ Ex VAT	£ Inc VAT
300mm	224	764	429	1463	300W	A, A+, B, D, E, F, G	89.1431	100.00	**120.00**
400mm	283	966	543	1852	300W	A, A+, B, D, E, F, G	89.1432	119.00	**142.80**
500mm	339	1156	651	2220	450W	A, A+, B, D, E, F, G	89.1433	128.00	**153.60**
600mm	393	1341	755	2575	450W	A, A+, B, D, E, F, G	89.1434	135.00	**162.00**

Wingrave - Straight Matt Grey 1800mm Height

Width	Delta △T30 Watts	Delta △T30 BTU	Delta △T50 Watts	Delta △T50 BTU	Element Output	Element Type	Code	£ Ex VAT	£ Inc VAT
300mm	254	867	490	1671	300W	A, A+, B, D, E, F, G	89.1435	112.00	**134.40**
400mm	321	1095	619	2111	450W	A, A+, B, D, E, F, G	89.1436	130.00	**156.00**
500mm	385	1313	742	2531	450W	A, A+, B, D, E, F, G	89.1437	153.00	**183.60**
600mm	446	1521	861	2937	600W	A, A+, B, D, E, F, G	89.1438	154.00	**184.80**

Multirail Range

WINGRAVE - STRAIGHT, MATT COBALT BLUE

Pictured 89.1607 Matt Cobalt Blue

Pictured 89.1602 Matt Cobalt Blue

A modern towel rail in a stunning matt cobalt blue finish. This rail will add a touch of class to finish off your bathroom.

FEATURES

- 22mm diameter horizontal round tubes
- Wide range of sizes to fit in all spaces
- Tested to BS EN 442 standards
- 5 Year manufacturer's warranty*
- Can be single or dual fuel, or all electric

* With conditions

Technical Tables & Drawings
Page 362-363

Wingrave - Straight Matt Cobalt Blue 1200mm Height

Width	Delta △T30 Watts	Delta △T30 BTU	Delta △T50 Watts	Delta △T50 BTU	Element Output	Element Type	Code	£ Ex VAT	£ Inc VAT
500mm	252	860	480	1637	300W	A, A+, B, D, E, F, G	89.1602	101.00	**121.20**
600mm	293	1000	557	1900	300W	A, A+, B, D, E, F, G	89.1603	109.00	**130.80**

Wingrave - Straight Matt Cobalt Blue 1600mm Height

Width	Delta △T30 Watts	Delta △T30 BTU	Delta △T50 Watts	Delta △T50 BTU	Element Output	Element Type	Code	£ Ex VAT	£ Inc VAT
500mm	339	1156	651	2220	450W	A, A+, B, D, E, F, G	89.1604	128.00	**153.60**
600mm	393	1341	755	2575	450W	A, A+, B, D, E, F, G	89.1605	135.00	**162.00**

Wingrave - Straight Matt Cobalt Blue 1800mm Height

Width	Delta △T30 Watts	Delta △T30 BTU	Delta △T50 Watts	Delta △T50 BTU	Element Output	Element Type	Code	£ Ex VAT	£ Inc VAT
500mm	385	1313	742	2531	450W	A, A+, B, D, E, F, G	89.1606	153.00	**183.60**
600mm	446	1521	861	2937	600W	A, A+, B, D, E, F, G	89.1607	154.00	**184.80**

Warranty 5 Year | Diameter (Ø) 22 MM Bars | Heating | All Electric | Dual-Fuel

TECHNICAL INFORMATION

All measurements in Height by Width. Radiators that are electric only are restricted to the heat output of the elements. Element size can be increased to full capacity of rail if using element type B, D, E, F or G. For element types see pages 324-337. For matching valves see pages 338-353. For indirect heating systems only. Tappings are approx. 44mm less than the width of the rail and approx. 65mm off the wall. Price includes radiator and wall fixing sets, valves extra.

Multirail Range

WINGRAVE - CURVED CHROME

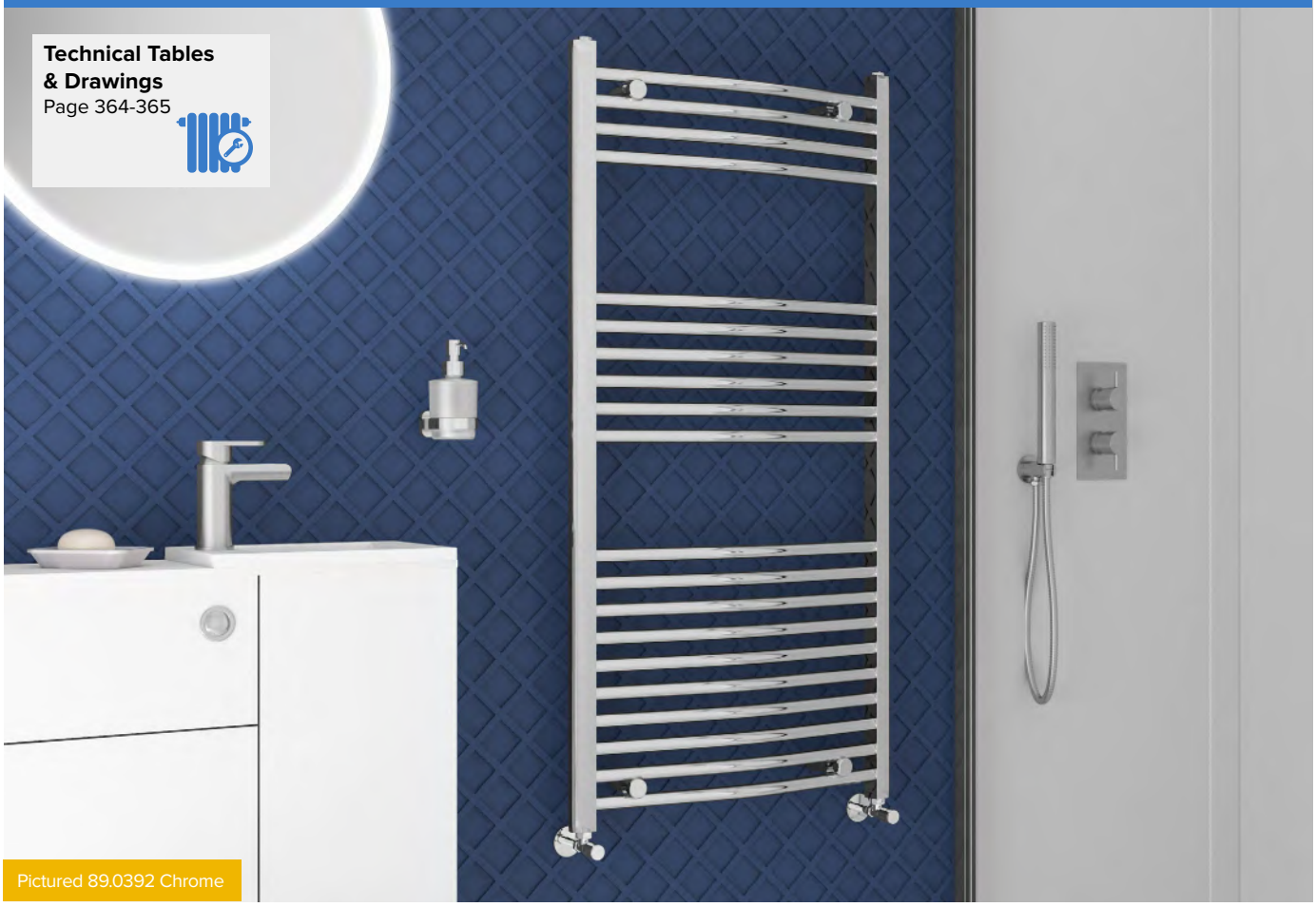

Technical Tables & Drawings
Page 364-365

Pictured 89.0392 Chrome

Warranty 5 Year | Diameter (Ø) 22 MM Bars | Heating | All Electric | Dual-Fuel

A high quality contemporary range available in a curved design and chrome finish. Available with robe hook accessories. This range is the ultimate in simplicity of style and practicality for your bathroom, keeping your towels warm.

FEATURES
- 22mm diameter horizontal round tubes
- Tested to BS EN 442 standards
- 5 Year manufacturer's warranty*
- Can be single or dual fuel, or all electric

* With conditions

D Shape Vent Caps
Page 357

Radiator Valves
Page 338-353

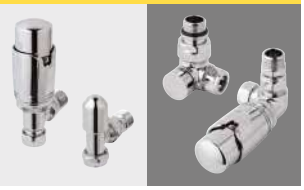

TECHNICAL INFORMATION

All measurements in Height by Width. Radiators that are electric only are restricted to the heat output of the elements. Element size can be increased to full capacity of rail if using element type B, D, E, F or G. For element types see pages 324-337. For matching valves see pages 338-353. For indirect heating systems only. Tappings are approx. 44mm less than the width of the rail and approx. 65mm off the wall. Price includes radiator and wall fixing sets, valves extra.

Wingrave - Curved Chrome 800mm Height

Width	Delta △T30 Watts	Delta △T30 BTU	Delta △T50 Watts	Delta △T50 BTU	Element Output	Element Type	Code	£ Ex VAT	£ Inc VAT
400mm	91	311	172	587	150W	A, A+, B, D, E, F, G	89.0384	107.00	**128.40**
500mm	108	369	207	706	150W	A, A+, B, D, E, F, G	89.0385	124.00	**148.80**
600mm	127	434	241	822	150W	A, A+, B, D, E, F, G	89.0386	132.00	**158.40**

Wingrave - Curved Chrome 1000mm Height

Width	Delta △T30 Watts	Delta △T30 BTU	Delta △T50 Watts	Delta △T50 BTU	Element Output	Element Type	Code	£ Ex VAT	£ Inc VAT
400mm	112	382	214	730	150W	A, A+, B, D, E, F, G	89.0387	128.00	**153.60**
500mm	135	461	257	877	150W	A, A+, B, D, E, F, G	89.0388	139.00	**166.80**
600mm	156	532	299	1020	150W	A, A+, B, D, E, F, G	89.0389	155.00	**186.00**

Wingrave - Curved Chrome 1200mm Height

Width	Delta △T30 Watts	Delta △T30 BTU	Delta △T50 Watts	Delta △T50 BTU	Element Output	Element Type	Code	£ Ex VAT	£ Inc VAT
400mm	134	457	257	877	150W	A, A+, B, D, E, F, G	89.0390	149.00	**178.80**
500mm	161	550	309	1054	150W	A, A+, B, D, E, F, G	89.0391	164.00	**196.80**
600mm	187	638	359	1225	300W	A, A+, B, D, E, F, G	89.0392	182.00	**218.40**

Wingrave - Curved Chrome 1600mm Height

Width	Delta △T30 Watts	Delta △T30 BTU	Delta △T50 Watts	Delta △T50 BTU	Element Output	Element Type	Code	£ Ex VAT	£ Inc VAT
400mm	180	614	352	1201	150W	A, A+, B, D, E, F, G	89.0393	194.00	**232.80**
500mm	217	740	423	1443	300W	A, A+, B, D, E, F, G	89.0394	213.00	**255.60**
600mm	252	860	492	1678	300W	A, A+, B, D, E, F, G	89.0395	231.00	**277.20**

Wingrave - Curved Chrome 1800mm Height

Width	Delta △T30 Watts	Delta △T30 BTU	Delta △T50 Watts	Delta △T50 BTU	Element Output	Element Type	Code	£ Ex VAT	£ Inc VAT
400mm	206	703	404	1378	300W	A, A+, B, D, E, F, G	89.0396	217.00	**260.40**
500mm	257	877	486	1658	300W	A, A+, B, D, E, F, G	89.0397	240.00	**288.00**
600mm	288	983	565	1927	450W	A, A+, B, D, E, F, G	89.0398	258.00	**309.60**

Multirail Range

WINGRAVE - CURVED GLOSS WHITE

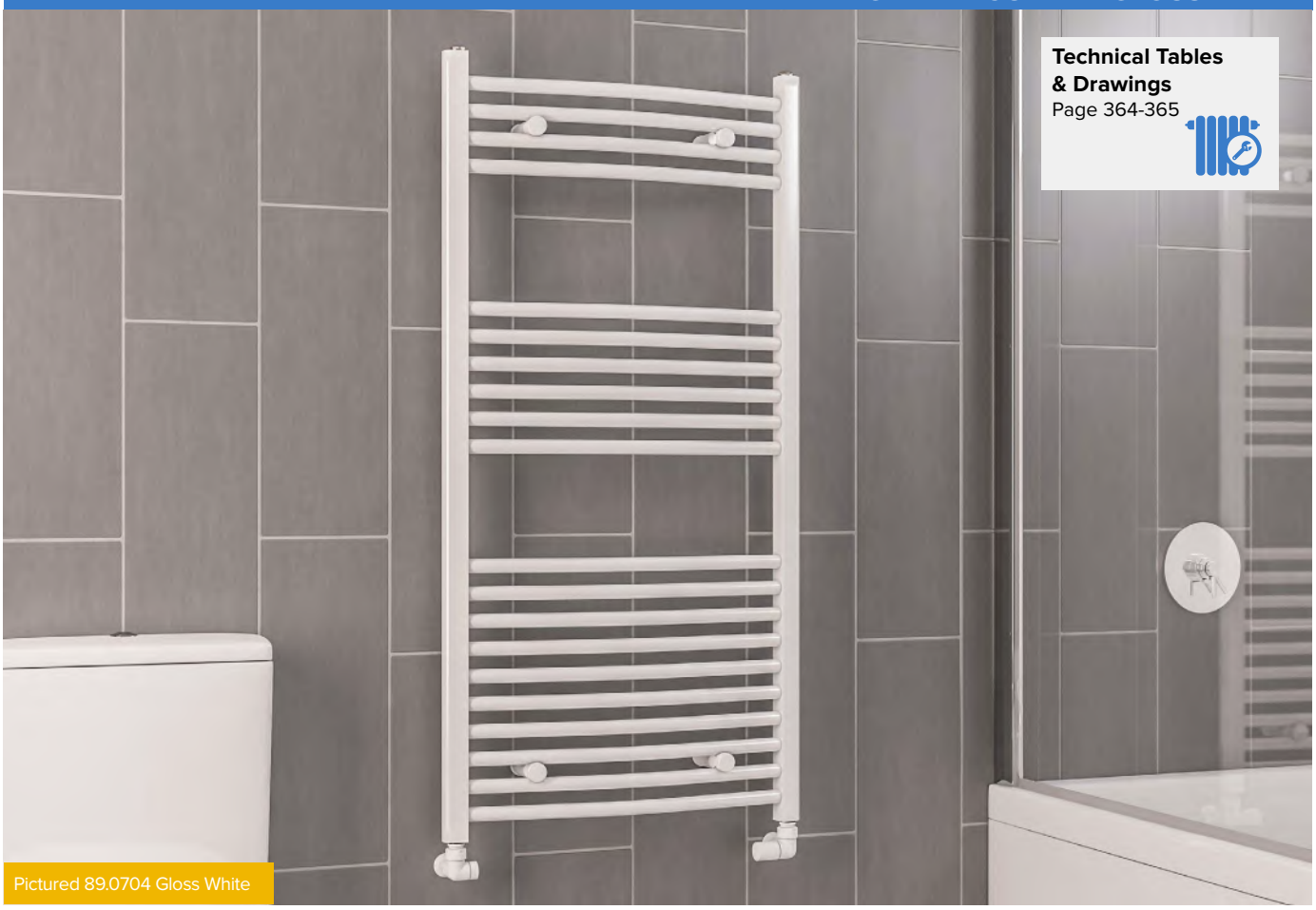

Pictured 89.0704 Gloss White

Technical Tables & Drawings
Page 364-365

Warranty 5 Year | Diameter (Ø) 22 MM Bars | Heating | All Electric | Dual-Fuel

A high quality contemporary range available in a curved gloss white finish. Available with robe hook accessories. This range is the ultimate in simplicity of style and practicality for your bathroom, keeping your towels warm.

FEATURES
- 22mm diameter horizontal round tubes
- Tested to BS EN 442 standards
- 5 Year manufacturer's warranty*
- Can be single or dual fuel, or all electric

* With conditions

D Shape Vent Caps
Page 357

Radiator Valves
Page 338-353

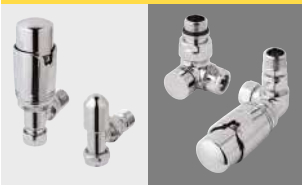

TECHNICAL INFORMATION

All measurements in Height by Width. Radiators that are electric only are restricted to the heat output of the elements. Element size can be increased to full capacity of rail if using element type B, D, E, F or G. For element types see pages 324-337. For matching valves see pages 338-353. For indirect heating systems only. Tappings are approx. 44mm less than the width of the rail and approx. 65mm off the wall. Price includes radiator and wall fixing sets, valves extra.

Wingrave - Curved Gloss White 800mm Height

Width	Delta △T30 Watts	Delta △T30 BTU	Delta △T50 Watts	Delta △T50 BTU	Element Output	Element Type	Code	£ Ex VAT	£ Inc VAT
400mm	143	488	269	918	150W	A, A+, B, D, E, F, G	89.0696	72.00	**86.40**
500mm	171	584	322	1099	150W	A, A+, B, D, E, F, G	89.0697	78.00	**93.60**
600mm	198	676	374	1276	300W	A, A+, B, D, E, F, G	89.0698	83.00	**99.60**

Wingrave - Curved Gloss White 1000mm Height

Width	Delta △T30 Watts	Delta △T30 BTU	Delta △T50 Watts	Delta △T50 BTU	Element Output	Element Type	Code	£ Ex VAT	£ Inc VAT
400mm	176	601	333	1136	150W	A, A+, B, D, E, F, G	89.0699	83.00	**99.60**
500mm	211	720	400	1364	300W	A, A+, B, D, E, F, G	89.0700	89.00	**106.80**
600mm	245	836	464	1583	300W	A, A+, B, D, E, F, G	89.0701	92.00	**110.40**

Wingrave - Curved Gloss White 1200mm Height

Width	Delta △T30 Watts	Delta △T30 BTU	Delta △T50 Watts	Delta △T50 BTU	Element Output	Element Type	Code	£ Ex VAT	£ Inc VAT
400mm	210	717	400	1364	300W	A, A+, B, D, E, F, G	89.0702	92.00	**110.40**
500mm	252	860	480	1637	300W	A, A+, B, D, E, F, G	89.0703	98.00	**117.60**
600mm	293	1000	557	1900	300W	A, A+, B, D, E, F, G	89.0704	103.00	**123.60**

Wingrave - Curved Gloss White 1600mm Height

Width	Delta △T30 Watts	Delta △T30 BTU	Delta △T50 Watts	Delta △T50 BTU	Element Output	Element Type	Code	£ Ex VAT	£ Inc VAT
400mm	283	966	543	1852	300W	A, A+, B, D, E, F, G	89.0705	113.00	**135.60**
500mm	339	1156	651	2220	450W	A, A+, B, D, E, F, G	89.0706	125.00	**150.00**
600mm	393	1341	755	2575	450W	A, A+, B, D, E, F, G	89.0707	132.00	**158.40**

Wingrave - Curved Gloss White 1800mm Height

Width	Delta △T30 Watts	Delta △T30 BTU	Delta △T50 Watts	Delta △T50 BTU	Element Output	Element Type	Code	£ Ex VAT	£ Inc VAT
400mm	321	1095	619	2111	450W	A, A+, B, D, E, F, G	89.0708	128.00	**153.60**
500mm	385	1313	742	2531	450W	A, A+, B, D, E, F, G	89.0709	144.00	**172.80**
600mm	446	1521	861	2937	600W	A, A+, B, D, E, F, G	89.0710	146.00	**175.20**

Multirail Range

BIAVA MULTIRAIL - STRAIGHT GLOSS WHITE

Pictured 41.0278 Gloss White

Biava Multirail - Straight Gloss White 360mm Height

Width	Delta △T30 Watts	Delta △T30 BTU	Delta △T50 Watts	Delta △T50 BTU	Element Output	Element Type	Code	£ Ex VAT	£ Inc VAT
400mm	80	273	147	502	100W	A, A+, B, D, E, F, G	41.0278	62.00	**74.40**

Biava Multirail - Straight Gloss White 688mm Height

Width	Delta △T30 Watts	Delta △T30 BTU	Delta △T50 Watts	Delta △T50 BTU	Element Output	Element Type	Code	£ Ex VAT	£ Inc VAT
450mm	146	498	269	918	150W	A, A+, B, D, E, F, G	41.0279	112.00	**134.40**
600mm	183	625	336	1146	150W	A, A+, B, D, E, F, G	41.0280	116.00	**139.20**
750mm	219	747	403	1375	300W	A, A+, B, D, E, F, G	41.0281	119.00	**142.80**

Biava Multirail - Straight Gloss White 1118mm Height

Width	Delta △T30 Watts	Delta △T30 BTU	Delta △T50 Watts	Delta △T50 BTU	Element Output	Element Type	Code	£ Ex VAT	£ Inc VAT
450mm	223	761	418	1426	300W	A, A+, B, D, E, F, G	41.0282	135.00	**162.00**
600mm	281	959	525	1791	300W	A, A+, B, D, E, F, G	41.0283	138.00	**165.60**
750mm	339	1156	633	2159	450W	A, A+, B, D, E, F, G	41.0284	150.00	**180.00**

Biava Multirail - Straight Gloss White 1720mm Height

Width	Delta △T30 Watts	Delta △T30 BTU	Delta △T50 Watts	Delta △T50 BTU	Element Output	Element Type	Code	£ Ex VAT	£ Inc VAT
450mm	348*	1187*	668*	2278*	450W	A, A+, B, D, E, F, G	41.0285	187.00	**224.40**
600mm	443*	1511*	850*	2899*	600W	A, A+, B, D, E, F, G	41.0286	195.00	**234.00**
750mm	526	1794	1001	3414	750W	A, A+, B, D, E, F, G	41.0287	208.00	**249.60**

* Further heat output information available on eastbrooktrade.com **E&OA**

BIAVA MULTIRAIL - STRAIGHT CHROME

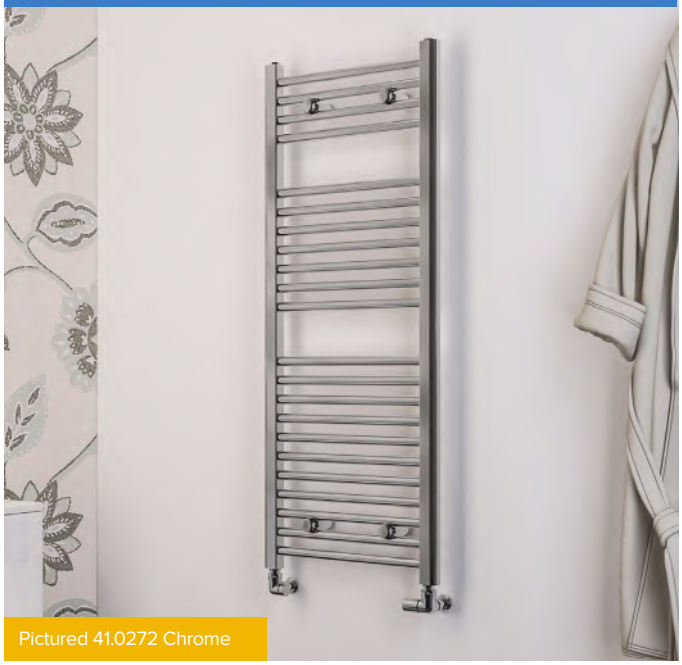

Pictured 41.0272 Chrome

Biava Multirail - Straight Chrome 360mm Height

Width	Delta △T30 Watts	Delta △T30 BTU	Delta △T50 Watts	Delta △T50 BTU	Element Output	Element Type	Code	£ Ex VAT	£ Inc VAT
400mm	54	185	104	355	150W	B	41.0268	100.00	**120.00**

Biava Multirail - Straight Chrome 688mm Height

Width	Delta △T30 Watts	Delta △T30 BTU	Delta △T50 Watts	Delta △T50 BTU	Element Output	Element Type	Code	£ Ex VAT	£ Inc VAT
450mm	101	345	192	655	150W	A, A+, B, D, E, F, G	41.0269	207.00	**248.40**
600mm	123	420	238	812	150W	A, A+, B, D, E, F, G	41.0270	231.00	**277.20**
750mm	152	519	287	979	150W	A, A+, B, D, E, F, G	41.0271	258.00	**309.60**

Biava Multirail - Straight Chrome 1118mm Height

Width	Delta △T30 Watts	Delta △T30 BTU	Delta △T50 Watts	Delta △T50 BTU	Element Output	Element Type	Code	£ Ex VAT	£ Inc VAT
450mm	172	587	293	1000	150W	A, A+, B, D, E, F, G	41.0272	259.00	**310.80**
600mm	192	655	368	1255	300W	A, A+, B, D, E, F, G	41.0273	283.00	**339.60**
750mm	231	788	442	1508	300W	A, A+, B, D, E, F, G	41.0274	306.00	**367.20**

Biava Multirail - Straight Chrome 1720mm Height

Width	Delta △T30 Watts	Delta △T30 BTU	Delta △T50 Watts	Delta △T50 BTU	Element Output	Element Type	Code	£ Ex VAT	£ Inc VAT
450mm	275*	938*	528*	1801*	300W	A, A+, B, D, E, F, G	41.0275	359.00	**430.80**
600mm	350*	1194*	671*	2289*	450W	A, A+, B, D, E, F, G	41.0276	372.00	**446.40**
750mm	425	1450	674	2299	600W	A, A+, B, D, E, F, G	41.0277	405.00	**486.00**

* Further heat output information available on eastbrooktrade.com **E&OA**

A high quality contemporary range available in straight and curved designs, and gloss white or chrome finishes. Available with towel hangers or robe hook accessories. This range is the ultimate in simplicity of style and practicality for your bathroom, keeping your towels warm.

FEATURES

- 22mm diameter horizontal round tubes
- Tested to BS EN 442 standards
- 5 Year manufacturer's warranty*
- Can be single or dual fuel, or all electric

* With conditions

Technical Tables & Drawings
Page 364-365

TECHNICAL INFORMATION

All measurements in Height by Width. Radiators that are electric only are restricted to the heat output of the elements. Element size can be increased to full capacity of rail if using element type B, D, E, F or G. For element types see pages 324-337. For matching valves see pages 338-353. For indirect heating systems only. Tappings are approx. 50mm less than the width of the rail and approx. 75mm off the wall. Price includes radiator and wall fixing sets, valves extra.

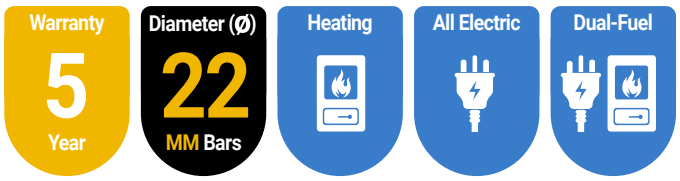

Robe Hooks
Page 355

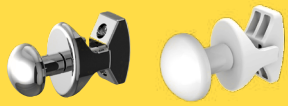

Multi-Rail Hangers
Page 355-356

Multirail Range

BIAVA MULTIRAIL - CURVED CHROME

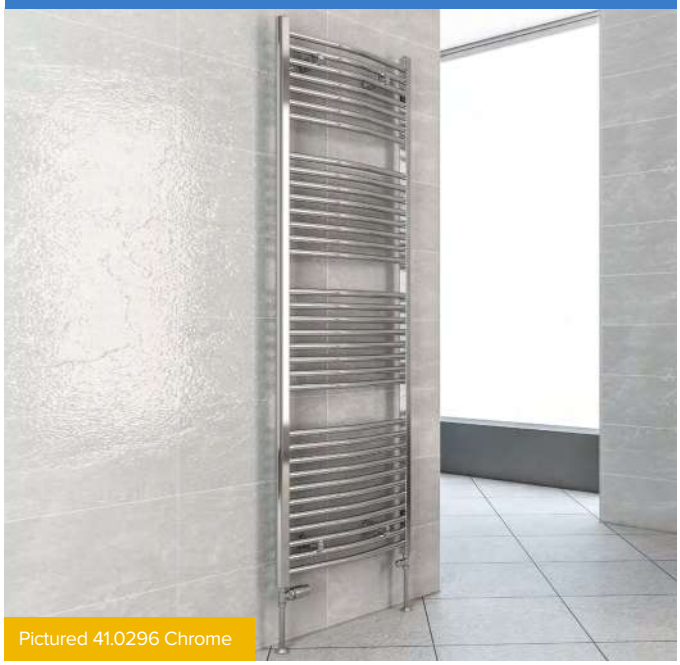

Pictured 41.0296 Chrome

Biava Multirail - Curved Chrome 360mm Height

Width	Delta △T30 Watts	Delta △T30 BTU	Delta △T50 Watts	Delta △T50 BTU	Element Output	Element Type	Code	£ Ex VAT	£ Inc VAT
400mm	47	161	91	311	150W	B	41.0288	96.00	**115.20**

Biava Multirail - Curved Chrome 688mm Height

Width	Delta △T30 Watts	Delta △T30 BTU	Delta △T50 Watts	Delta △T50 BTU	Element Output	Element Type	Code	£ Ex VAT	£ Inc VAT
450mm	114	389	218	744	150W	A, A+, B, D, E, F, G	41.0289	229.00	**274.80**
600mm	144	492	277	945	150W	A, A+, B, D, E, F, G	41.0290	257.00	**308.40**
750mm	175	597	336	1146	150W	A, A+, B, D, E, F, G	41.0291	283.00	**339.60**

Biava Multirail - Curved Chrome 1118mm Height

Width	Delta △T30 Watts	Delta △T30 BTU	Delta △T50 Watts	Delta △T50 BTU	Element Output	Element Type	Code	£ Ex VAT	£ Inc VAT
450mm	181	618	347	1184	150W	A, A+, B, D, E, F, G	41.0292	284.00	**340.80**
600mm	229	781	439	1497	300W	A, A+, B, D, E, F, G	41.0293	308.00	**369.60**
750mm	277	945	532	1815	300W	A, A+, B, D, E, F, G	41.0294	339.00	**406.80**

Biava Multirail - Curved Chrome 1720mm Height

Width	Delta △T30 Watts	Delta △T30 BTU	Delta △T50 Watts	Delta △T50 BTU	Element Output	Element Type	Code	£ Ex VAT	£ Inc VAT
450mm	352	1201	607	2070	300W	A, A+, B, D, E, F, G	41.0295	404.00	**484.80**
600mm	354	1208	679	2316	450W	A, A+, B, D, E, F, G	41.0296	410.00	**492.00**
750mm	429	1463	822	2804	600W	A, A+, B, D, E, F, G	41.0297	444.00	**532.80**

* Further heat output information available on eastbrooktrade.com **E&OA**

BIAVA MULTIRAIL - CURVED GLOSS WHITE

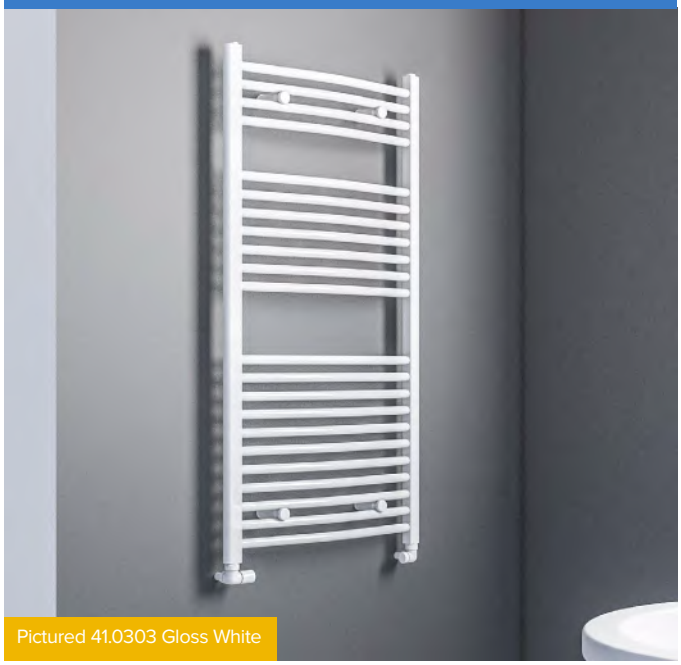

Pictured 41.0303 Gloss White

Biava Multirail - Curved Gloss White 360mm Height

Width	Delta △T30 Watts	Delta △T30 BTU	Delta △T50 Watts	Delta △T50 BTU	Element Output	Element Type	Code	£ Ex VAT	£ Inc VAT
400mm	60	205	116	396	100W	A, A+, B, D, E, F, G	41.0298	63.00	**75.60**

Biava Multirail - Curved Gloss White 688mm Height

Width	Delta △T30 Watts	Delta △T30 BTU	Delta △T50 Watts	Delta △T50 BTU	Element Output	Element Type	Code	£ Ex VAT	£ Inc VAT
450mm	144	492	276	942	150W	A, A+, B, D, E, F, G	41.0299	128.00	**153.60**
600mm	183	625	351	1197	150W	A, A+, B, D, E, F, G	41.0300	131.00	**157.20**
750mm	222	758	366	1249	300W	A, A+, B, D, E, F, G	41.0301	132.00	**158.40**

Biava Multirail - Curved Gloss White 1118mm Height

Width	Delta △T30 Watts	Delta △T30 BTU	Delta △T50 Watts	Delta △T50 BTU	Element Output	Element Type	Code	£ Ex VAT	£ Inc VAT
450mm	229	781	387	1320	300W	A, A+, B, D, E, F, G	41.0302	146.00	**175.20**
600mm	249	850	439	1497	300W	A, A+, B, D, E, F, G	41.0303	150.00	**180.00**
750mm	277	945	532	1815	450W	A, A+, B, D, E, F, G	41.0304	162.00	**194.40**

Biava Multirail - Curved Gloss White 1720mm Height

Width	Delta △T30 Watts	Delta △T30 BTU	Delta △T50 Watts	Delta △T50 BTU	Element Output	Element Type	Code	£ Ex VAT	£ Inc VAT
450mm	279	952	637	2173	450W	A, A+, B, D, E, F, G	41.0305	208.00	**249.60**
600mm	448	1528	859	2930	600W	A, A+, B, D, E, F, G	41.0306	215.00	**258.00**
750mm	543	1852	1041	3550	750W	A, A+, B, D, E, F, G	41.0307	230.00	**276.00**

* Further heat output information available on eastbrooktrade.com **E&OA**

A high quality contemporary range available in straight and curved designs, and gloss white or chrome finishes. Available with towel hangers or robe hook accessories. This range is the ultimate in simplicity of style and practicality for your bathroom, keeping your towels warm.

FEATURES

- 22mm diameter horizontal round tubes
- Tested to BS EN 442 standards
- 5 Year manufacturer's warranty*
- Can be single or dual fuel, or all electric

* With conditions

Technical Tables & Drawings
Page 364-365

TECHNICAL INFORMATION

All measurements in Height by Width. Radiators that are electric only are restricted to the heat output of the elements. Element size can be increased to full capacity of rail if using element type B, D, E, F or G. For element types see pages 324-337. For matching valves see pages 338-353. For indirect heating systems only. Tappings are approx. 50mm less than the width of the rail and approx. 75mm off the wall. Price includes radiator and wall fixing sets, valves extra.

Warranty 5 Year | Diameter (Ø) 22 MM Bars | Heating | All Electric | Dual-Fuel

Multirail Range

WESTWARD - STRAIGHT

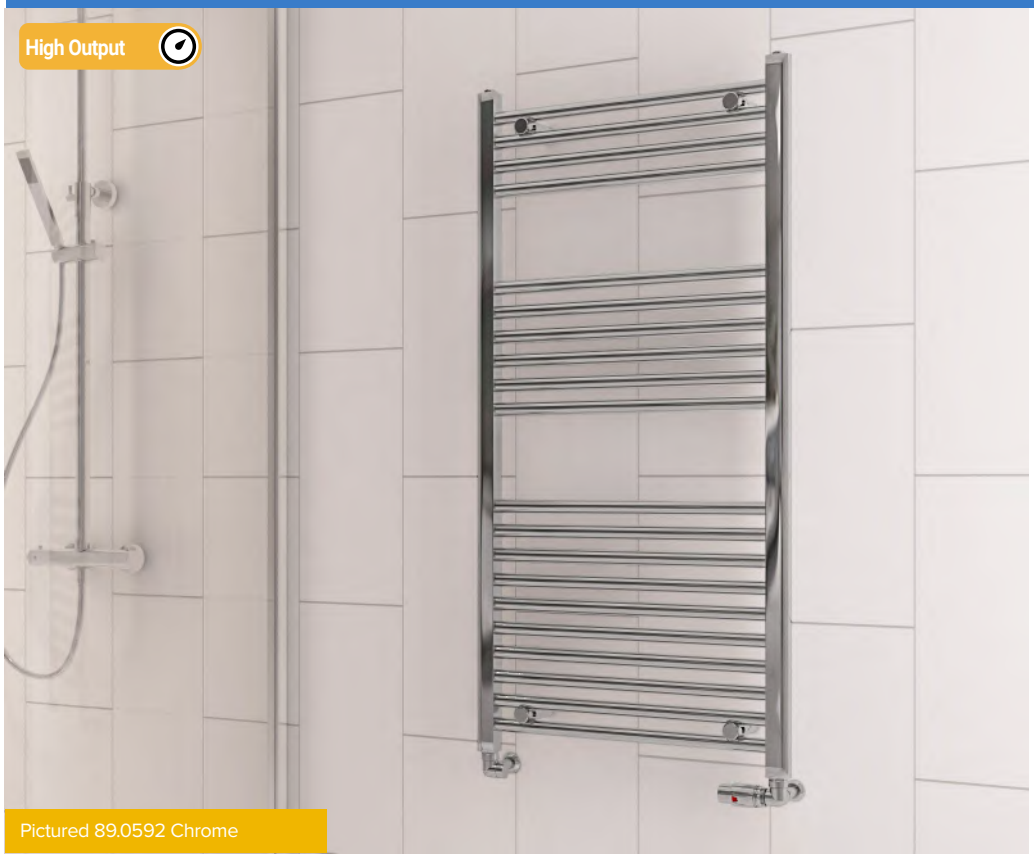

Pictured 89.0592 Chrome

D Shape Vent Caps
Page 357

Towel Hangers
Page 355-356

Robe Hooks
Page 355

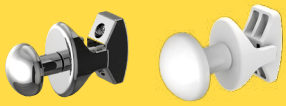

Multi-Rail Hangers
Page 355-356

Pictured 89.0576 Gloss White

Tube Diameter
25mm

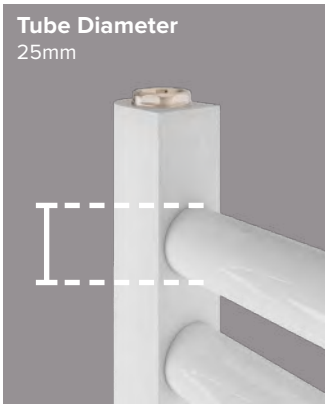

Diameter (Ø) 25 MM Bars

Heating

All Electric

Dual-Fuel

In addition to the Wingrave & Wendover ranges, this straight multirail boasts a higher output for the larger bathrooms. **Each horizontal tube is 25mm diameter, which produces a higher heat output in less space compared to a standard 22mm tube.**

FEATURES
- 25mm diameter horizontal round tubes
- Tested to BS EN 442 standards
- 5 Year manufacturer's warranty*
- Can be single or dual fuel, or all electric

* With conditions

Multirail Range

WESTWARD - STRAIGHT

Gloss White

Westward - Straight Gloss White 600mm Height

Width	Delta △T30 Watts	Delta △T30 BTU	Delta △T50 Watts	Delta △T50 BTU	Element Output	Element Type	Code	£ Ex VAT	£ Inc VAT
500mm	138	471	260	887	150W	A, A+, B, D, E, F, G	89.0572	80.00	**96.00**
600mm	161	550	304	1037	150W	A, A+, B, D, E, F, G	89.0573	86.00	**103.20**
800mm	206	703	389	1327	300W	A, A+, B, D, E, F, G	89.0574	101.00	**121.20**

Westward - Straight Gloss White 800mm Height

Width	Delta △T30 Watts	Delta △T30 BTU	Delta △T50 Watts	Delta △T50 BTU	Element Output	Element Type	Code	£ Ex VAT	£ Inc VAT
400mm	150	512	284	969	150W	A, A+, B, D, E, F, G	89.0575	79.00	**94.80**
500mm	181	618	343	1170	300W	A, A+, B, D, E, F, G	89.0576	86.00	**103.20**
600mm	212	723	401	1368	300W	A, A+, B, D, E, F, G	89.0577	89.00	**106.80**

Westward - Straight Gloss White 1200mm Height

Width	Delta △T30 Watts	Delta △T30 BTU	Delta △T50 Watts	Delta △T50 BTU	Element Output	Element Type	Code	£ Ex VAT	£ Inc VAT
400mm	223	761	424	1446	300W	A, A+, B, D, E, F, G	89.0578	101.00	**121.20**
500mm	270	921	513	1750	300W	A, A+, B, D, E, F, G	89.0579	109.00	**130.80**
600mm	315	1075	599	2043	450W	A, A+, B, D, E, F, G	89.0580	118.00	**141.60**

Westward - Straight Gloss White 1800mm Height

Width	Delta △T30 Watts	Delta △T30 BTU	Delta △T50 Watts	Delta △T50 BTU	Element Output	Element Type	Code	£ Ex VAT	£ Inc VAT
400mm	337	1150	645	2200	450W	A, A+, B, D, E, F, G	89.0581	139.00	**166.80**
500mm	407	1388	780	2660	600W	A, A+, B, D, E, F, G	89.0582	161.00	**193.20**
600mm	476	1624	912	3110	600W	A, A+, B, D, E, F, G	89.0583	162.00	**194.40**

Chrome

Westward - Straight Chrome 600mm Height

Width	Delta △T30 Watts	Delta △T30 BTU	Delta △T50 Watts	Delta △T50 BTU	Element Output	Element Type	Code	£ Ex VAT	£ Inc VAT
500mm	88	301	169	577	150W	A, A+, B, D, E, F, G	89.0584	125.00	**150.00**
600mm	104	355	198	676	150W	A, A+, B, D, E, F, G	89.0585	137.00	**164.40**
800mm	133	454	255	870	150W	A, A+, B, D, E, F, G	89.0586	162.00	**194.40**

Westward - Straight Chrome 800mm Height

Width	Delta △T30 Watts	Delta △T30 BTU	Delta △T50 Watts	Delta △T50 BTU	Element Output	Element Type	Code	£ Ex VAT	£ Inc VAT
400mm	96	328	184	628	150W	A, A+, B, D, E, F, G	89.0587	118.00	**141.60**
500mm	116	396	223	761	150W	A, A+, B, D, E, F, G	89.0588	131.00	**157.20**
600mm	136	464	262	894	150W	A, A+, B, D, E, F, G	89.0589	143.00	**171.60**

Westward - Straight Chrome 1200mm Height

Width	Delta △T30 Watts	Delta △T30 BTU	Delta △T50 Watts	Delta △T50 BTU	Element Output	Element Type	Code	£ Ex VAT	£ Inc VAT
400mm	142	485	275	938	150W	A, A+, B, D, E, F, G	89.0590	158.00	**189.60**
500mm	173	590	334	1139	150W	A, A+, B, D, E, F, G	89.0591	180.00	**216.00**
600mm	203	693	391	1334	300W	A, A+, B, D, E, F, G	89.0592	195.00	**234.00**

Westward - Straight Chrome 1800mm Height

Width	Delta △T30 Watts	Delta △T30 BTU	Delta △T50 Watts	Delta △T50 BTU	Element Output	Element Type	Code	£ Ex VAT	£ Inc VAT
400mm	215	734	418	1426	300W	A, A+, B, D, E, F, G	89.0593	237.00	**284.40**
500mm	261	891	508	1733	300W	A, A+, B, D, E, F, G	89.0594	259.00	**310.80**
600mm	306	1044	595	2029	450W	A, A+, B, D, E, F, G	89.0595	280.00	**336.00**

TECHNICAL INFORMATION

All measurements in Height by Width. Radiators that are electric only are restricted to the heat output of the elements. Element size can be increased to full capacity of rail if using element type B, D, E, F or G. For element types see pages 324-337. For matching valves see pages 338-353. For indirect heating systems only. Tappings are approx. 44mm less than the width of the rail and approx. 65mm off the wall. Price includes radiator and wall fixing sets, valves extra.

Technical Tables & Drawings
Page 366-367

600mm High

800mm High

1200mm High

1800mm High

Multirail Range

RION MULTIRAIL

Pictured 89.1691 Chrome

Rear fixing metal wall brackets

Bar Dimensions (mm)

Horizontal Bars 20 x 20mm
Vertical Bars D Shape 40 x 30mm

Pictured 89.1677 Matt Anthracite

Warranty 5 Year

Heating

All Electric

Dual-Fuel

Round Vent Caps
Page 357

SWATCHES AVAILABLE

D Shaped vertical bars meet square 20x20mm horizontal bars in this modern and elegant designed towel rail. Available in 3 heights and 2 widths with 4 colour options.

FEATURES
- 40x30mm D shape vertical bars with 20x20mm square horizontal bars
- Rear fixing metal wall brackets
- Tested to BS EN 442 standards
- 4 colours available from stock
- 5 Year Manufacturer's Warranty*

*With conditions

Technical Tables & Drawings
Page 366-367

Tube Size
20 x 20mm

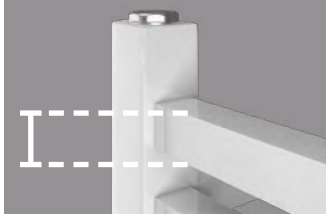

Multirail Range

RION MULTIRAIL

Gloss White

Rion Multirail - Gloss White 800mm Height

Width	Delta △T30 Watts	Delta △T30 BTU	Delta △T50 Watts	Delta △T50 BTU	Element Output	Element Type	Code	£ Ex VAT	£ Inc VAT
500mm	173	590	332	1133	150W	A, A+, B, D, E, F, G	89.1671	135.00	**162.00**
600mm	197	672	378	1289	150W	A, A+, B, D, E, F, G	89.1672	153.00	**183.60**

Rion Multirail - Gloss White 1200mm Height

Width	Delta △T30 Watts	Delta △T30 BTU	Delta △T50 Watts	Delta △T50 BTU	Element Output	Element Type	Code	£ Ex VAT	£ Inc VAT
500mm	269	918	515	1757	150W	A, A+, B, D, E, F, G	89.1673	224.00	**268.80**
600mm	307	1047	587	2002	300W	A, A+, B, D, E, F, G	89.1674	245.00	**294.00**

Rion Multirail - Gloss White 1800mm Height

Width	Delta △T30 Watts	Delta △T30 BTU	Delta △T50 Watts	Delta △T50 BTU	Element Output	Element Type	Code	£ Ex VAT	£ Inc VAT
500mm	413	1409	784	2674	300W	A, A+, B, D, E, F, G	89.1675	315.00	**378.00**
600mm	471	1607	893	3046	300W	A, A+, B, D, E, F, G	89.1676	347.00	**416.40**

Matt Anthracite

Rion Multirail - Matt Anthracite 800mm Height

Width	Delta △T30 Watts	Delta △T30 BTU	Delta △T50 Watts	Delta △T50 BTU	Element Output	Element Type	Code	£ Ex VAT	£ Inc VAT
500mm	173	590	332	1133	150W	A, A+, B, D, E, F, G	89.1677	135.00	**162.00**
600mm	197	672	378	1289	150W	A, A+, B, D, E, F, G	89.1678	153.00	**183.60**

Rion Multirail - Matt Anthracite 1200mm Height

Width	Delta △T30 Watts	Delta △T30 BTU	Delta △T50 Watts	Delta △T50 BTU	Element Output	Element Type	Code	£ Ex VAT	£ Inc VAT
500mm	269	918	515	1757	150W	A, A+, B, D, E, F, G	89.1679	224.00	**268.80**
600mm	307	1047	587	2002	300W	A, A+, B, D, E, F, G	89.1680	245.00	**294.00**

Rion Multirail - Matt Anthracite 1800mm Height

Width	Delta △T30 Watts	Delta △T30 BTU	Delta △T50 Watts	Delta △T50 BTU	Element Output	Element Type	Code	£ Ex VAT	£ Inc VAT
500mm	413	1409	784	2674	300W	A, A+, B, D, E, F, G	89.1681	315.00	**378.00**
600mm	471	1607	893	3046	300W	A, A+, B, D, E, F, G	89.1682	347.00	**416.40**

Matt Black

Rion Multirail - Matt Black 800mm Height

Width	Delta △T30 Watts	Delta △T30 BTU	Delta △T50 Watts	Delta △T50 BTU	Element Output	Element Type	Code	£ Ex VAT	£ Inc VAT
500mm	173	590	332	1133	150W	A, A+, B, D, E, F, G	89.1683	135.00	**162.00**
600mm	197	672	378	1289	150W	A, A+, B, D, E, F, G	89.1684	153.00	**183.60**

Rion Multirail - Matt Black 1200mm Height

Width	Delta △T30 Watts	Delta △T30 BTU	Delta △T50 Watts	Delta △T50 BTU	Element Output	Element Type	Code	£ Ex VAT	£ Inc VAT
500mm	269	918	515	1757	150W	A, A+, B, D, E, F, G	89.1685	224.00	**268.80**
600mm	307	1047	587	2002	300W	A, A+, B, D, E, F, G	89.1686	245.00	**294.00**

Rion Multirail - Matt Black 1800mm Height

Width	Delta △T30 Watts	Delta △T30 BTU	Delta △T50 Watts	Delta △T50 BTU	Element Output	Element Type	Code	£ Ex VAT	£ Inc VAT
500mm	413	1409	784	2674	300W	A, A+, B, D, E, F, G	89.1687	315.00	**378.00**
600mm	471	1607	893	3046	300W	A, A+, B, D, E, F, G	89.1688	347.00	**416.40**

Chrome

Rion Multirail - Chrome 800mm Height

Width	Delta △T30 Watts	Delta △T30 BTU	Delta △T50 Watts	Delta △T50 BTU	Element Output	Element Type	Code	£ Ex VAT	£ Inc VAT
500mm	109	372	212	723	100W	A, A+, B, D, E, F, G	89.1689	197.00	**236.40**
600mm	123	420	240	819	100W	A, A+, B, D, E, F, G	89.1690	223.00	**267.60**

Rion Multirail - Chrome 1200mm Height

Width	Delta △T30 Watts	Delta △T30 BTU	Delta △T50 Watts	Delta △T50 BTU	Element Output	Element Type	Code	£ Ex VAT	£ Inc VAT
500mm	170	580	331	1129	150W	A, A+, B, D, E, F, G	89.1691	329.00	**394.80**
600mm	192	655	374	1276	150W	A, A+, B, D, E, F, G	89.1692	359.00	**430.80**

Rion Multirail - Chrome 1800mm Height

Width	Delta △T30 Watts	Delta △T30 BTU	Delta △T50 Watts	Delta △T50 BTU	Element Output	Element Type	Code	£ Ex VAT	£ Inc VAT
500mm	265	904	515	1757	150W	A, A+, B, D, E, F, G	89.1693	462.00	**554.40**
600mm	299	1020	582	1985	300W	A, A+, B, D, E, F, G	89.1694	509.00	**610.80**

TECHNICAL INFORMATION

All measurements in Height by Width. Radiators that are electric only are restricted to the heat output of the elements. Element size can be increased to full capacity of rail if using element type B, D, E, F or G. For element types see pages 324-337. For matching valves see pages 338-353. For indirect heating systems only. Tappings are approx. 45mm less than the width of the rail and approx. 80mm off the wall. Price includes radiator and wall fixing sets, valves extra.

800mm High

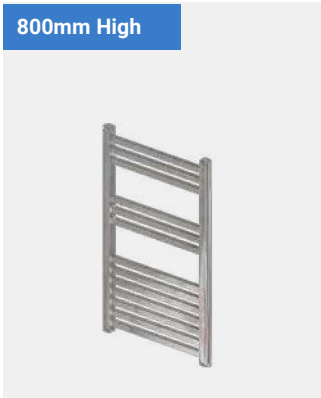

1200mm High

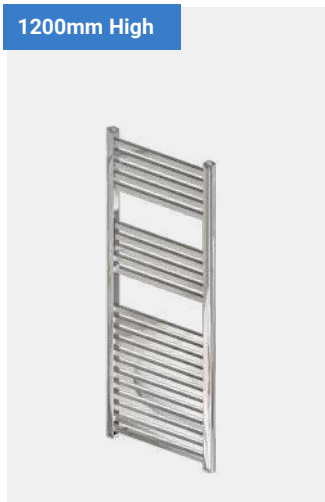

1800mm High

Gloss White

Matt Anthracite

Matt Black

Chrome

Multirail Range

TUSCAN - GLOSS WHITE / CHROME

Pictured 41.0317 Gloss White

Pictured 41.0309 Chrome

A simple design straight ladder rail which is the ideal combination of modern style and practicality. The range includes chrome and gloss white options in a range of sizes.

Warranty 5 Year | Diameter (Ø) 22 MM Bars | Heating | All Electric | Dual-Fuel

FEATURES
- 22mm diameter horizontal round tubes
- Rear fixing wall brackets
- Tested to BS EN 442 standards
- 5 Year manufacturer's warranty*
- Can be single or dual fuel, or all electric

* With conditions

Technical Tables & Drawings
Page 366-367

Round Vent Caps
Page 357

TECHNICAL INFORMATION

All measurements in Height by Width. Radiators that are electric only are restricted to the heat output of the elements. Element size can be increased to full capacity of rail if using element type B, D, E, F or G. For element types see pages 324-337. For matching valves see pages 338-353. For indirect heating systems only. Tappings are approx. 50mm less than the width of the rail and approx. 75mm off the wall. Price includes radiator and wall fixing sets, valves extra.

Tuscan - Gloss White 650mm Height

Width	Delta △T30 Watts	Delta △T30 BTU	Delta △T50 Watts	Delta △T50 BTU	Element Output	Element Type	Code	£ Ex VAT	£ Inc VAT
450mm	105	359	198	676	100W	A, A+, B, D, E, F, G	41.0314	63.00	**75.60**
600mm	120	410	226	771	100W	A, A+, B, D, E, F, G	41.0315	70.00	**84.00**

Tuscan - Gloss White 1200mm Height

Width	Delta △T30 Watts	Delta △T30 BTU	Delta △T50 Watts	Delta △T50 BTU	Element Output	Element Type	Code	£ Ex VAT	£ Inc VAT
450mm	177	604	334	1139	150W	A, A+, B, D, E, F, G	41.0316	84.00	**100.80**
600mm	185*	631*	348*	1187*	150W	A, A+, B, D, E, F, G	41.0317	90.00	**108.00**

* Further heat output information available on eastbrooktrade.com **E&OA**

Tuscan - Gloss White 1750mm Height

Width	Delta △T30 Watts	Delta △T30 BTU	Delta △T50 Watts	Delta △T50 BTU	Element Output	Element Type	Code	£ Ex VAT	£ Inc VAT
450mm	252	860	476	1624	150W	A, A+, B, D, E, F, G	41.0318	109.00	**130.80**
600mm	282	962	534	1821	300W	A, A+, B, D, E, F, G	41.0319	113.00	**135.60**

Tuscan - Chrome 650mm Height

Width	Delta △T30 Watts	Delta △T30 BTU	Delta △T50 Watts	Delta △T50 BTU	Element Output	Element Type	Code	£ Ex VAT	£ Inc VAT
450mm	60	205	115	393	100W	A, A+, B, D, E, F, G	41.0308	89.00	**106.80**
600mm	77	263	151	515	100W	A, A+, B, D, E, F, G	41.0309	97.00	**116.40**

Tuscan - Chrome 1200mm Height

Width	Delta △T30 Watts	Delta △T30 BTU	Delta △T50 Watts	Delta △T50 BTU	Element Output	Element Type	Code	£ Ex VAT	£ Inc VAT
450mm	105	359	204	696	150W	A, A+, B, D, E, F, G	41.0310	137.00	**164.40**
600mm	130	444	246	839	150W	A, A+, B, D, E, F, G	41.0311	149.00	**178.80**

Tuscan - Chrome 1750mm Height

Width	Delta △T30 Watts	Delta △T30 BTU	Delta △T50 Watts	Delta △T50 BTU	Element Output	Element Type	Code	£ Ex VAT	£ Inc VAT
450mm	168	573	321	1095	150W	A, A+, B, D, E, F, G	41.0312	187.00	**224.40**
600mm	206	703	392	1337	150W	A, A+, B, D, E, F, G	41.0313	202.00	**242.40**

Multirail Range

BIAVA ROUND

Pictured 41.0159 Gloss White

Pictured 41.0152 Chrome

Rear fixing wall brackets

Technical Tables & Drawings
Page 366-367

A high quality modern, straight towel rail with a durable shiny chrome finish and round rails. A functional radiator with spacing to allow the warming of many towels yet with style that is aesthetically pleasing and will fit into any bathroom.

Biava Round - Gloss White 600mm Height

Width	Delta △T30 Watts	Delta △T30 BTU	Delta △T50 Watts	Delta △T50 BTU	Element Output	Element Type	Code	£ Ex VAT	£ Inc VAT
400mm	107	365	197	672	100W	A, A+, B, D, E, F, G	41.0154	91.00	**109.20**
500mm	128	437	236	805	150W	A, A+, B, D, E, F, G	41.0157	96.00	**115.20**
600mm	149	509	274	935	150W	A, A+, B, D, E, F, G	41.0160	100.00	**120.00**

Biava Round - Chrome 600mm Height

Width	Delta △T30 Watts	Delta △T30 BTU	Delta △T50 Watts	Delta △T50 BTU	Element Output	Element Type	Code	£ Ex VAT	£ Inc VAT
400mm	70	239	130	444	100W	A, A+, B, D, E, F, G	41.0145	155.00	**186.00**
500mm	84	287	155	529	100W	A, A+, B, D, E, F, G	41.0148	161.00	**193.20**
600mm	97	331	179	611	150W	A, A+, B, D, E, F, G	41.0151	174.00	**208.80**

Biava Round - Gloss White 1200mm Height

Width	Delta △T30 Watts	Delta △T30 BTU	Delta △T50 Watts	Delta △T50 BTU	Element Output	Element Type	Code	£ Ex VAT	£ Inc VAT
400mm	197	672	370	1262	150W	A, A+, B, D, E, F, G	41.0155	137.00	**164.40**
500mm	236	805	444	1515	300W	A, A+, B, D, E, F, G	41.0158	149.00	**178.80**
600mm	274	935	516	1760	300W	A, A+, B, D, E, F, G	41.0161	156.00	**187.20**

Biava Round - Chrome 1200mm Height

Width	Delta △T30 Watts	Delta △T30 BTU	Delta △T50 Watts	Delta △T50 BTU	Element Output	Element Type	Code	£ Ex VAT	£ Inc VAT
400mm	132	451	249	850	150W	A, A+, B, D, E, F, G	41.0146	247.00	**296.40**
500mm	157	536	296	1010	150W	A, A+, B, D, E, F, G	41.0149	264.00	**316.80**
600mm	181	618	342	1167	150W	A, A+, B, D, E, F, G	41.0152	284.00	**340.80**

Biava Round - Gloss White 1800mm Height

Width	Delta △T30 Watts	Delta △T30 BTU	Delta △T50 Watts	Delta △T50 BTU	Element Output	Element Type	Code	£ Ex VAT	£ Inc VAT
400mm	297	1013	569	1941	300W	A, A+, B, D, E, F, G	41.0156	187.00	**224.40**
500mm	356	1214	684	2333	450W	A, A+, B, D, E, F, G	41.0159	202.00	**242.40**
600mm	414	1412	794	2708	450W	A, A+, B, D, E, F, G	41.0162	215.00	**258.00**

Biava Round - Chrome 1800mm Height

Width	Delta △T30 Watts	Delta △T30 BTU	Delta △T50 Watts	Delta △T50 BTU	Element Output	Element Type	Code	£ Ex VAT	£ Inc VAT
400mm	201	686	388	1324	300W	A, A+, B, D, E, F, G	41.0147	345.00	**414.00**
500mm	239	815	462	1576	300W	A, A+, B, D, E, F, G	41.0150	372.00	**446.40**
600mm	276	942	533	1818	300W	A, A+, B, D, E, F, G	41.0153	416.00	**499.20**

FEATURES

- 19mm diameter horizontal round tubes
- 38mm diameter vertical profiles
- Rear fixing wall brackets
- Tested to BS EN 442 standards
- 5 Year Manufacturer's Warranty*

* With conditions

Warranty 5 Year | Diameter (Ø) 19 MM Bars | Heating | All Electric | Dual-Fuel

TECHNICAL INFORMATION

All measurements in Height by Width. Radiators that are electric only are restricted to the heat output of the elements. Element size can be increased to full capacity of rail if using element type B, D, E, F or G. For element types see pages 324-337. For matching valves see pages 338-353. For indirect heating systems only. Tappings are approx. 40mm less than the width of the rail and approx. 63mm off the wall. Price includes radiator and wall fixing sets, valves extra.

Radiator Valves
Page 338-353

Multirail Range

CORINIUM ROUND

Warranty 5 Year | Diameter (Ø) 22 MM Bars | Heating

Pictured 89.1571 Chrome

Rear fixing metal wall brackets

All Electric | Dual-Fuel

SWATCHES AVAILABLE

Pictured 89.1556 Matt Anthracite

Available in a wide range of colours to complement any bathroom decoration, Corinium Round is designed with both style and functionality in mind. The ample spacing between the horizontal tubes ensures optimal air circulation, allowing for maximum towel drying efficiency.

FEATURES

- 22mm diameter horizontal round tubes
- 42mm diameter vertical profiles
- Rear fixing metal wall brackets
- Tested to BS EN 442 standards
- 5 colours available from stock
- State-of-the-Art welding technology
- 5 Year Manufacturer's Warranty*

* With conditions

Technical Tables & Drawings
Page 368-369

Round Vent Caps
Page 357

Multirail Range

CORINIUM ROUND

Corinium Round - Gloss White

Size H x W	Delta △T30 Watts	Delta △T30 BTU	Delta △T50 Watts	Delta △T50 BTU	Element Output	Code	£ Ex VAT	£ Inc VAT
800 x 500mm	164	560	312	1064	150W	89.1542	119.00	**142.80**
800 x 600mm	192	655	364	1242	150W	89.1543	137.00	**164.40**
1200 x 500mm	250	853	474	1617	300W	89.1544	154.00	**184.80**
1200 x 600mm	292	996	554	1890	300W	89.1545	178.00	**213.60**
1800 x 500mm	380	1296	721	2459	600W	89.1546	212.00	**254.40**
1800 x 600mm	444	1515	842	2872	600W	89.1547	246.00	**295.20**

Corinium Round - Matt Anthracite

Size H x W	Delta △T30 Watts	Delta △T30 BTU	Delta △T50 Watts	Delta △T50 BTU	Element Output	Code	£ Ex VAT	£ Inc VAT
800 x 500mm	164	560	312	1064	150W	89.1554	119.00	**142.80**
800 x 600mm	192	655	364	1242	150W	89.1555	137.00	**164.40**
1200 x 500mm	250	853	474	1617	300W	89.1556	154.00	**184.80**
1200 x 600mm	292	996	554	1890	300W	89.1557	178.00	**213.60**
1800 x 500mm	380	1296	721	2459	600W	89.1558	212.00	**254.40**
1800 x 600mm	444	1515	842	2872	600W	89.1559	246.00	**295.20**

Corinium Round - Matt Grey

Size H x W	Delta △T30 Watts	Delta △T30 BTU	Delta △T50 Watts	Delta △T50 BTU	Element Output	Code	£ Ex VAT	£ Inc VAT
800 x 500mm	164	560	312	1064	150W	89.1548	119.00	**142.80**
800 x 600mm	192	655	364	1242	150W	89.1549	137.00	**164.40**
1200 x 500mm	250	853	474	1617	300W	89.1550	154.00	**184.80**
1200 x 600mm	292	996	554	1890	300W	89.1551	178.00	**213.60**
1800 x 500mm	380	1296	721	2459	600W	89.1552	212.00	**254.40**
1800 x 600mm	444	1515	842	2872	600W	89.1553	246.00	**295.20**

Corinium Round - Matt Black

Size H x W	Delta △T30 Watts	Delta △T30 BTU	Delta △T50 Watts	Delta △T50 BTU	Element Output	Code	£ Ex VAT	£ Inc VAT
800 x 500mm	164	560	312	1064	150W	89.1560	119.00	**142.80**
800 x 600mm	192	655	364	1242	150W	89.1561	137.00	**164.40**
1200 x 500mm	250	853	474	1617	300W	89.1562	154.00	**184.80**
1200 x 600mm	292	996	554	1890	300W	89.1563	178.00	**213.60**
1800 x 500mm	380	1296	721	2459	600W	89.1564	212.00	**254.40**
1800 x 600mm	444	1515	842	2872	600W	89.1565	246.00	**295.20**

Corinium Round - Chrome

Size H x W	Delta △T30 Watts	Delta △T30 BTU	Delta △T50 Watts	Delta △T50 BTU	Element Output	Code	£ Ex VAT	£ Inc VAT
800 x 500mm	109	372	207	706	100W	89.1566	180.00	**216.00**
800 x 600mm	127	434	242	826	100W	89.1567	207.00	**248.40**
1200 x 500mm	164	560	314	1071	150W	89.1568	255.00	**306.00**
1200 x 600mm	192	655	366	1249	300W	89.1569	296.00	**355.20**
1800 x 500mm	250	853	480	1637	300W	89.1570	340.00	**408.00**
1800 x 600mm	292	996	560	1910	300W	89.1571	395.00	**474.00**

Radiator Valves
Page 338-353

All Corinium models shown above are compatible with Element Type A, A+, B, D, E, F, and G

TECHNICAL INFORMATION

All measurements in Height by Width. Radiators that are electric only are restricted to the heat output of the elements. Element size can be increased to full capacity of rail if using element type B, D, E, F or G. For element types see pages 324-337. For matching valves see pages 338-353. For indirect heating systems only. Tappings are approx. 42mm less than the width of the rail and approx. 85mm off the wall. Price includes radiator and wall fixing sets, valves extra.

Gloss White

Matt Grey

Chrome

Matt Anthracite

Matt Black

State-of-the-Art welding

Multirail Range

TUSCAN ROUND

Warranty 5 Year | Diameter (Ø) 22 MM Bars | Heating

Pictured 89.1601 Chrome

Rear fixing metal wall brackets

All Electric | Dual-Fuel

Pictured 89.1574 Gloss White

A popular addition to the Multirail Range. Available in a variety of colours to suit any bathroom. The generous spacing between the horizontal tubes allows for maximum towel drying.

FEATURES
- 22mm diameter horizontal round tubes
- 42mm diameter vertical profiles
- Rear fixing metal wall brackets
- Tested to BS EN 442 standards
- 5 colours available from stock
- State-of-the-Art welding technology
- 5 Year Manufacturer's Warranty*

* With conditions

Technical Tables & Drawings
Page 368-369

Round Vent Caps
Page 357

Multirail Range

TUSCAN ROUND

Tuscan Round - Gloss White

Size H x W	Delta △T30 Watts	Delta △T30 BTU	Delta △T50 Watts	Delta △T50 BTU	Element Output	Code	£ Ex VAT	£ Inc VAT
800 x 500mm	129	440	243	829	150W	89.1572	112.00	**134.40**
800 x 600mm	148	505	281	959	150W	89.1573	131.00	**157.20**
1200 x 500mm	193	659	366	1249	300W	89.1574	144.00	**172.80**
1200 x 600mm	223	761	422	1440	300W	89.1575	167.00	**200.40**
1800 x 500mm	290	989	548	1869	450W	89.1576	200.00	**240.00**
1800 x 600mm	335	1143	632	2156	450W	89.1577	230.00	**276.00**

Tuscan Round - Matt Anthracite

Size H x W	Delta △T30 Watts	Delta △T30 BTU	Delta △T50 Watts	Delta △T50 BTU	Element Output	Code	£ Ex VAT	£ Inc VAT
800 x 500mm	129	440	243	829	150W	89.1584	112.00	**134.40**
800 x 600mm	148	505	281	959	150W	89.1585	131.00	**157.20**
1200 x 500mm	193	659	366	1249	300W	89.1586	144.00	**172.80**
1200 x 600mm	223	761	422	1440	300W	89.1587	167.00	**200.40**
1800 x 500mm	290	989	548	1869	450W	89.1588	200.00	**240.00**
1800 x 600mm	335	1143	632	2156	450W	89.1589	230.00	**276.00**

Tuscan Round - Matt Grey

Size H x W	Delta △T30 Watts	Delta △T30 BTU	Delta △T50 Watts	Delta △T50 BTU	Element Output	Code	£ Ex VAT	£ Inc VAT
800 x 500mm	129	440	243	829	150W	89.1578	112.00	**134.40**
800 x 600mm	148	505	281	959	150W	89.1579	131.00	**157.20**
1200 x 500mm	193	659	366	1249	300W	89.1580	144.00	**172.80**
1200 x 600mm	223	761	422	1440	300W	89.1581	167.00	**200.40**
1800 x 500mm	290	989	548	1869	450W	89.1582	200.00	**240.00**
1800 x 600mm	335	1143	632	2156	450W	89.1583	230.00	**276.00**

Tuscan Round - Matt Black

Size H x W	Delta △T30 Watts	Delta △T30 BTU	Delta △T50 Watts	Delta △T50 BTU	Element Output	Code	£ Ex VAT	£ Inc VAT
800 x 500mm	129	440	243	829	150W	89.1590	112.00	**134.40**
800 x 600mm	148	505	281	959	150W	89.1591	131.00	**157.20**
1200 x 500mm	193	659	366	1249	300W	89.1592	144.00	**172.80**
1200 x 600mm	223	761	422	1440	300W	89.1593	167.00	**200.40**
1800 x 500mm	290	989	548	1869	450W	89.1594	200.00	**240.00**
1800 x 600mm	335	1143	632	2156	450W	89.1595	230.00	**276.00**

Tuscan Round - Chrome

Size H x W	Delta △T30 Watts	Delta △T30 BTU	Delta △T50 Watts	Delta △T50 BTU	Element Output	Code	£ Ex VAT	£ Inc VAT
800 x 500mm	83	284	159	543	100W	89.1596	165.00	**198.00**
800 x 600mm	96	328	184	628	100W	89.1597	191.00	**229.20**
1200 x 500mm	126	430	240	819	150W	89.1598	239.00	**286.80**
1200 x 600mm	145	495	277	945	150W	89.1599	278.00	**333.60**
1800 x 500mm	189	645	361	1232	300W	89.1600	320.00	**384.00**
1800 x 600mm	218	744	417	1422	300W	89.1601	370.00	**444.00**

Radiator Valves
Page 338-353

All Tuscan Round models shown above are compatible with Element Type A, A+, B, D, E, F, and G

TECHNICAL INFORMATION

All measurements in Height by Width. Radiators that are electric only are restricted to the heat output of the elements. Element size can be increased to full capacity of rail if using element type B, D, E, F or G. For element types see pages 324-337. For matching valves see pages 338-353. For indirect heating systems only. Tappings are approx. 42mm less than the width of the rail and approx. 85mm off the wall. Price includes radiator and wall fixing sets, valves extra.

Gloss White

Matt Grey

Chrome

Matt Anthracite

Matt Black

State-of-the-Art welding

Multirail Range

BIAVA - TUBE ON TUBE, CHROME

Pictured 41.0171 Chrome

Round Vent Caps
Page 357

Multi-Rail Hangers
Page 355-356

A contemporary tubular design towel rail in a range of sizes and both chrome and white finshes. The tube on tube features produces a higher heat output.

FEATURES
- 19mm diameter horizontal round tubes
- 32mm diameter vertical profiles
- Can be single or dual fuel, or all electric
- Tested to BS EN 442 standards
- 5 Year Manufacturer's Warranty*

* With conditions

Technical Tables & Drawings
Page 368-369

Warranty 5 Year | Diameter (Ø) 19 MM Bars | Heating | All Electric | Dual-Fuel

Biava - Tube on Tube - Chrome 600mm Height

Width	Delta △T30 Watts	Delta △T30 BTU	Delta △T50 Watts	Delta △T50 BTU	Element Output	Element Type	Code	£ Ex VAT	£ Inc VAT
400mm	81	277	148	505	100W	A, A+, B, D, E, F, G	41.0163	174.00	**208.80**
500mm	94	321	175	597	100W	A, A+, B, D, E, F, G	41.0166	182.00	**218.40**
600mm	109	372	199	679	150W	A, A+, B, D, E, F, G	41.0169	192.00	**230.40**

Biava - Tube on Tube - Chrome 1200mm Height

Width	Delta △T30 Watts	Delta △T30 BTU	Delta △T50 Watts	Delta △T50 BTU	Element Output	Element Type	Code	£ Ex VAT	£ Inc VAT
400mm	177	604	328	1119	150W	A, A+, B, D, E, F, G	41.0164	314.00	**376.80**
500mm	209	713	388	1324	300W	A, A+, B, D, E, F, G	41.0167	345.00	**414.00**
600mm	240	819	450	1535	300W	A, A+, B, D, E, F, G	41.0170	369.00	**442.80**

Biava - Tube on Tube - Chrome 1800mm Height

Width	Delta △T30 Watts	Delta △T30 BTU	Delta △T50 Watts	Delta △T50 BTU	Element Output	Element Type	Code	£ Ex VAT	£ Inc VAT
400mm	278	948	514	1753	300W	A, A+, B, D, E, F, G	41.0165	460.00	**552.00**
500mm	329	1122	608	2074	450W	A, A+, B, D, E, F, G	41.0168	500.00	**600.00**
600mm	366	1249	696	2374	450W	A, A+, B, D, E, F, G	41.0171	542.00	**650.40**

Radiator Valves
Page 338-353

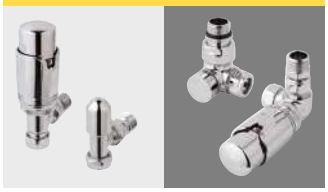

Towel Hangers
Page 355-356

Robe Hooks
Page 355

TECHNICAL INFORMATION

All measurements in Height by Width. Radiators that are electric only are restricted to the heat output of the elements. Element size can be increased to full capacity of rail if using element type B, D, E, F or G. For element types see pages 324-337. For matching valves see pages 338-353. For indirect heating systems only. Tappings are approx. 50mm less than the width of the rail and approx. 55mm off the wall. Price includes radiator and wall fixing sets, valves extra.

Multirail Range

BIAVA SQUARE - CHROME

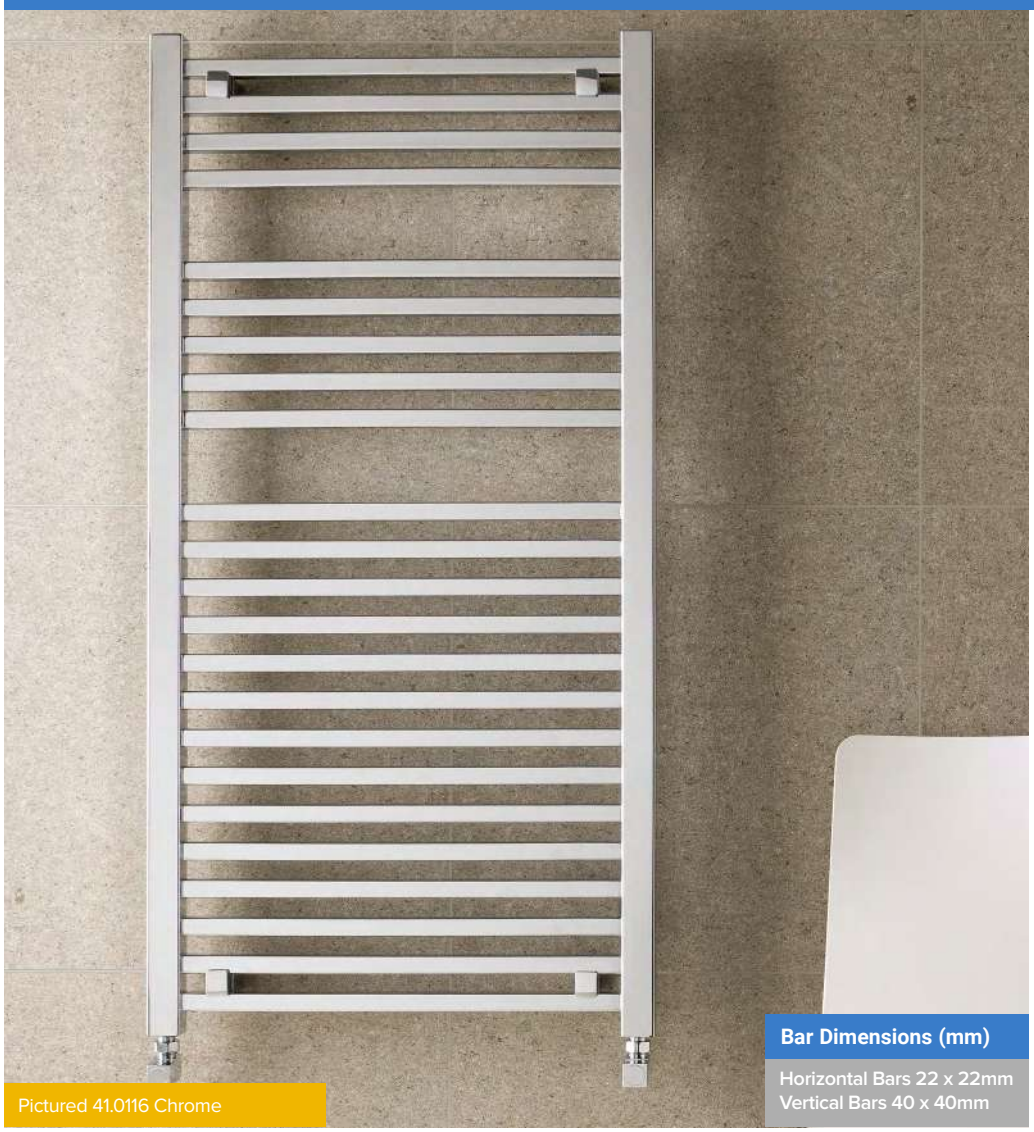

Pictured 41.0116 Chrome

Bar Dimensions (mm)

Horizontal Bars 22 x 22mm
Vertical Bars 40 x 40mm

Round Vent Caps
Page 357

A modern style square rail that still allows maximium space for keeping your towels warm.

Biava Square - Chrome 600mm Height

Width	Delta △T30 Watts	Delta △T30 BTU	Delta △T50 Watts	Delta △T50 BTU	Element Output	Element Type	Code	£ Ex VAT	£ Inc VAT
400mm	79	270	150	512	100W	A, A+, B, D, E, F, G	41.0109	239.00	**286.80**
500mm	94	321	178	607	150W	A, A+, B, D, E, F, G	41.0112	259.00	**310.80**
600mm	108	369	206	703	150W	A, A+, B, D, E, F, G	41.0115	280.00	**336.00**

Biava Square - Chrome 1200mm Height

Width	Delta △T30 Watts	Delta △T30 BTU	Delta △T50 Watts	Delta △T50 BTU	Element Output	Element Type	Code	£ Ex VAT	£ Inc VAT
400mm	165	563	321	1095	300W	A, A+, B, D, E, F, G	41.0110	455.00	**546.00**
500mm	190	648	373	1272	300W	A, A+, B, D, E, F, G	41.0113	516.00	**619.20**
600mm	215	734	424	1446	300W	A, A+, B, D, E, F, G	41.0116	555.00	**666.00**

Biava Square - Chrome 1800mm Height

Width	Delta △T30 Watts	Delta △T30 BTU	Delta △T50 Watts	Delta △T50 BTU	Element Output	Element Type	Code	£ Ex VAT	£ Inc VAT
400mm	244	833	468	1596	450W	A, A+, B, D, E, F, G	41.0111	636.00	**763.20**
500mm	294	1003	566	1931	450W	A, A+, B, D, E, F, G	41.0114	711.00	**853.20**
600mm	342	1167	663	2261	600W	A, A+, B, D, E, F, G	41.0117	783.00	**939.60**

TECHNICAL INFORMATION

All measurements in Height by Width. Radiators that are electric only are restricted to the heat output of the elements. Element size can be increased to full capacity of rail if using element type B, D, E, F or G. For element types see pages 324-337. For matching valves see pages 338-353. For indirect heating systems only. Tappings are approx. 40mm less than the width of the rail and approx. 70mm off the wall. Price includes radiator and wall fixing sets, valves extra.

FEATURES

- Tested to BS EN 442 standards
- 5 Year manufacturer's warranty*
- Can be single or dual fuel, or all electric

* With conditions

Technical Tables & Drawings
Page 368-369

Warranty 5 Year

Heating

All Electric

Dual-Fuel

COMPLETE THE LOOK

Radiator Valves
Page: 338-353

Multirail Range

TUSCAN SQUARE MULTIRAIL

Pictured 89.1667 Chrome

Pictured 89.1648 Gloss White

Bar Dimensions (mm)

Horizontal Bars 20 x 20mm
Vertical Bars 30 x 30mm

Rear fixing metal wall brackets

Warranty 5 Year | Heating | All Electric | Dual-Fuel

The very popular Tuscan Square towel rail is now available as Multirail. Available in 3 heights and 2 widths with 4 colour options.

FEATURES

- 30x30mm square vertical bars with 20x20mm square horizontal bars
- Rear fixing metal wall brackets
- Tested to BS EN 442 standards
- 4 colours available from stock
- 5 Year Manufacturer's Warranty*

*With conditions

Technical Tables & Drawings
Page 370-371

Round Vent Caps
Page 357

SWATCHES AVAILABLE

Tube Size
20 x 20mm

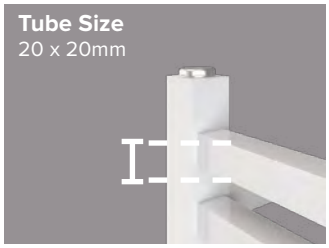

Multirail Range

TUSCAN SQUARE MULTIRAIL

Gloss White

Tuscan Square Multirail - Gloss White 800mm Height

Width	Delta △T30 Watts	Delta △T30 BTU	Delta △T50 Watts	Delta △T50 BTU	Element Output	Element Type	Code	£ Ex VAT	£ Inc VAT
500mm	171	584	334	1139	150W	A, A+, B, D, E, F, G	89.1647	135.00	**162.00**
600mm	200	682	391	1334	300W	A, A+, B, D, E, F, G	89.1648	153.00	**183.60**

Tuscan Square Multirail- Gloss White 1200mm Height

Width	Delta △T30 Watts	Delta △T30 BTU	Delta △T50 Watts	Delta △T50 BTU	Element Output	Element Type	Code	£ Ex VAT	£ Inc VAT
500mm	271	925	523	1784	450W	A, A+, B, D, E, F, G	89.1649	224.00	**268.80**
600mm	318	1085	613	2091	450W	A, A+, B, D, E, F, G	89.1650	245.00	**294.00**

Tuscan Square Multirail - Gloss White 1800mm Height

Width	Delta △T30 Watts	Delta △T30 BTU	Delta △T50 Watts	Delta △T50 BTU	Element Output	Element Type	Code	£ Ex VAT	£ Inc VAT
500mm	412	1405	780	2660	600W	A, A+, B, D, E, F, G	89.1651	315.00	**378.00**
600mm	482	1644	913	3114	600W	A, A+, B, D, E, F, G	89.1652	347.00	**416.40**

Matt Black

Tuscan Square Multirail - Matt Black 800mm Height

Width	Delta △T30 Watts	Delta △T30 BTU	Delta △T50 Watts	Delta △T50 BTU	Element Output	Element Type	Code	£ Ex VAT	£ Inc VAT
500mm	171	584	334	1139	150W	A, A+, B, D, E, F, G	89.1659	135.00	**162.00**
600mm	200	682	391	1334	300W	A, A+, B, D, E, F, G	89.1660	153.00	**183.60**

Tuscan Square Multirail - Matt Black 1200mm Height

Width	Delta △T30 Watts	Delta △T30 BTU	Delta △T50 Watts	Delta △T50 BTU	Element Output	Element Type	Code	£ Ex VAT	£ Inc VAT
500mm	271	925	523	1784	450W	A, A+, B, D, E, F, G	89.1661	224.00	**268.80**
600mm	318	1085	613	2091	450W	A, A+, B, D, E, F, G	89.1662	245.00	**294.00**

Tuscan Square Multirail - Matt Black 1800mm Height

Width	Delta △T30 Watts	Delta △T30 BTU	Delta △T50 Watts	Delta △T50 BTU	Element Output	Element Type	Code	£ Ex VAT	£ Inc VAT
500mm	412	1405	780	2660	600W	A, A+, B, D, E, F, G	89.1663	315.00	**378.00**
600mm	482	1644	913	3114	600W	A, A+, B, D, E, F, G	89.1664	347.00	**416.40**

Matt Anthracite

Tuscan Square Multirail - Matt Anthracite 800mm Height

Width	Delta △T30 Watts	Delta △T30 BTU	Delta △T50 Watts	Delta △T50 BTU	Element Output	Element Type	Code	£ Ex VAT	£ Inc VAT
500mm	171	584	334	1139	150W	A, A+, B, D, E, F, G	89.1653	135.00	**162.00**
600mm	200	682	391	1334	300W	A, A+, B, D, E, F, G	89.1654	153.00	**183.60**

Tuscan Square Multirail - Matt Anthracite 1200mm Height

Width	Delta △T30 Watts	Delta △T30 BTU	Delta △T50 Watts	Delta △T50 BTU	Element Output	Element Type	Code	£ Ex VAT	£ Inc VAT
500mm	271	925	523	1784	450W	A, A+, B, D, E, F, G	89.1655	224.00	**268.80**
600mm	318	1085	613	2091	450W	A, A+, B, D, E, F, G	89.1656	245.00	**294.00**

Tuscan Square Multirail - Matt Anthracite 1800mm Height

Width	Delta △T30 Watts	Delta △T30 BTU	Delta △T50 Watts	Delta △T50 BTU	Element Output	Element Type	Code	£ Ex VAT	£ Inc VAT
500mm	412	1405	780	2660	600W	A, A+, B, D, E, F, G	89.1657	315.00	**378.00**
600mm	482	1644	913	3114	600W	A, A+, B, D, E, F, G	89.1658	347.00	**416.40**

Chrome

Tuscan Square Multirail - Chrome 800mm Height

Width	Delta △T30 Watts	Delta △T30 BTU	Delta △T50 Watts	Delta △T50 BTU	Element Output	Element Type	Code	£ Ex VAT	£ Inc VAT
500mm	109	372	215	734	150W	A, A+, B, D, E, F, G	89.1665	197.00	**236.40**
600mm	125	427	248	846	150W	A, A+, B, D, E, F, G	89.1666	223.00	**267.60**

Tuscan Square Multirail - Chrome 1200mm Height

Width	Delta △T30 Watts	Delta △T30 BTU	Delta △T50 Watts	Delta △T50 BTU	Element Output	Element Type	Code	£ Ex VAT	£ Inc VAT
500mm	171	584	335	1143	300W	A, A+, B, D, E, F, G	89.1667	329.00	**394.80**
600mm	197	672	386	1317	300W	A, A+, B, D, E, F, G	89.1668	359.00	**430.80**

Tuscan Square Multirail - Chrome 1800mm Height

Width	Delta △T30 Watts	Delta △T30 BTU	Delta △T50 Watts	Delta △T50 BTU	Element Output	Element Type	Code	£ Ex VAT	£ Inc VAT
500mm	262	894	509	1736	450W	A, A+, B, D, E, F, G	89.1669	462.00	**554.40**
600mm	302	1030	587	2002	450W	A, A+, B, D, E, F, G	89.1670	509.00	**610.80**

TECHNICAL INFORMATION

All measurements in Height by Width. Radiators that are electric only are restricted to the heat output of the elements. Element size can be increased to full capacity of rail if using element type B, D, E, F or G. For element types see pages 324-337. For matching valves see pages 338-353. For indirect heating systems only. Tappings are approx. 30mm less than the width of the rail and approx. 80mm off the wall. Price includes radiator and wall fixing sets, valves extra.

800mm High

1200mm High

1800mm High

Gloss White

Matt Anthracite

Matt Black

Chrome

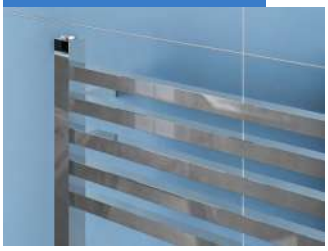

Multirail Range

TUSCAN SQUARE

Chrome

Pictured 89.1270 Chrome

Bar Dimensions (mm)

Horizontal Bars 20 x 20mm
Vertical Bars 30 x 30mm

Matt Black

Pictured 89.1266 Matt Black

Rear fixing metal wall brackets

Evenly placed square bars of Tuscan Square is the new definition of minimalism.

Tuscan Square - Chrome 800mm Height

Width	Delta △T30 Watts	Delta △T30 BTU	Delta △T50 Watts	Delta △T50 BTU	Element Output	Element Type	Code	£ Ex VAT	£ Inc VAT
500mm	83	284	159	543	100W	A, A+, B, D, E, F, G	89.1268	159.00	**190.80**
600mm	96	328	183	625	100W	A, A+, B, D, E, F, G	89.1269	173.00	**207.60**

Tuscan Square - Chrome 1200mm Height

Width	Delta △T30 Watts	Delta △T30 BTU	Delta △T50 Watts	Delta △T50 BTU	Element Output	Element Type	Code	£ Ex VAT	£ Inc VAT
500mm	125	427	239	815	150W	A, A+, B, D, E, F, G	89.1270	208.00	**249.60**
600mm	143	488	275	938	150W	A, A+, B, D, E, F, G	89.1271	227.00	**272.40**

Tuscan Square - Chrome 1800mm Height

Width	Delta △T30 Watts	Delta △T30 BTU	Delta △T50 Watts	Delta △T50 BTU	Element Output	Element Type	Code	£ Ex VAT	£ Inc VAT
500mm	189	645	363	1238	300W	A, A+, B, D, E, F, G	89.1272	297.00	**356.40**
600mm	217	740	416	1419	300W	A, A+, B, D, E, F, G	89.1273	320.00	**384.00**

Tuscan Square - Matt Black 800mm Height

Width	Delta △T30 Watts	Delta △T30 BTU	Delta △T50 Watts	Delta △T50 BTU	Element Output	Element Type	Code	£ Ex VAT	£ Inc VAT
500mm	128	437	242	826	150W	A, A+, B, D, E, F, G	89.1262	121.00	**145.20**
600mm	146	498	278	948	150W	A, A+, B, D, E, F, G	89.1263	133.00	**159.60**

Tuscan Square - Matt Black 1200mm Height

Width	Delta △T30 Watts	Delta △T30 BTU	Delta △T50 Watts	Delta △T50 BTU	Element Output	Element Type	Code	£ Ex VAT	£ Inc VAT
500mm	193	659	366	1249	300W	A, A+, B, D, E, F, G	89.1264	155.00	**186.00**
600mm	221	754	419	1429	300W	A, A+, B, D, E, F, G	89.1265	167.00	**200.40**

Tuscan Square - Matt Black 1800mm Height

Width	Delta △T30 Watts	Delta △T30 BTU	Delta △T50 Watts	Delta △T50 BTU	Element Output	Element Type	Code	£ Ex VAT	£ Inc VAT
500mm	290	989	548	1869	450W	A, A+, B, D, E, F, G	89.1266	208.00	**249.60**
600mm	332	1133	628	2142	450W	A, A+, B, D, E, F, G	89.1267	227.00	**272.40**

FEATURES

- Tested to BS EN 442 standards
- Rear fixing metal wall brackets
- 5 Year manufacturer's warranty*
- Can be single or dual fuel, or all electric

* With conditions

Technical Tables & Drawings
Page 370-371

TECHNICAL INFORMATION

All measurements in Height by Width. Radiators that are electric only are restricted to the heat output of the elements. Element size can be increased to full capacity of rail if using element type B, D, E, F or G. For element types see pages 324-337. For matching valves see pages 338-353. For indirect heating systems only. Tappings are approx. 30mm less than the width of the rail and approx. 80mm off the wall. Projection from wall is approx. 95mm. Price includes radiator and wall fixing sets, valves extra.

Warranty 5 Year | Heating | All Electric | Dual-Fuel

Round Vent Caps
Page 357

Radiator Valves
Page 338-353

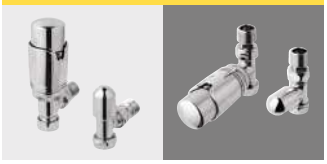

Multirail Range

TUSCAN SQUARE

Matt Grey

Pictured 89.1253 Matt Grey

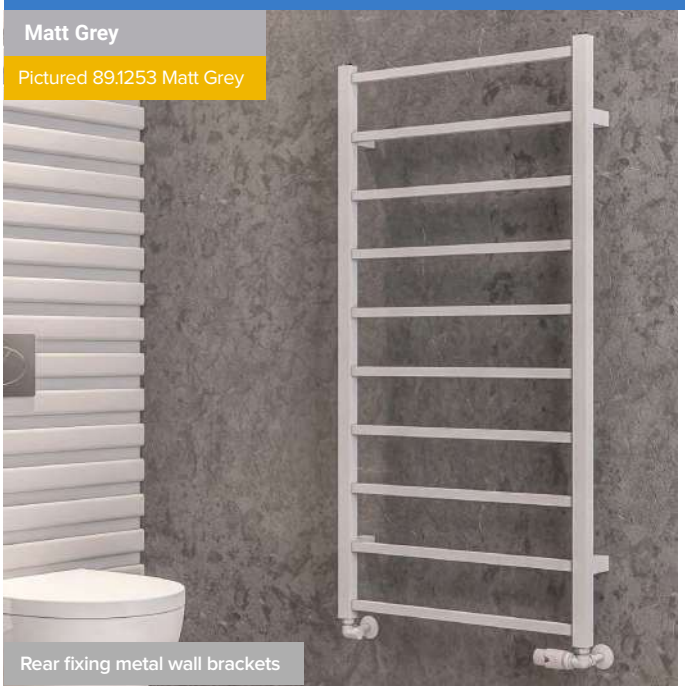

Rear fixing metal wall brackets

Matt Anthracite

Pictured 89.1257 Matt Anthracite

Tuscan Square - Matt Grey 800mm Height

Width	Delta △T30 Watts	Delta △T30 BTU	Delta △T50 Watts	Delta △T50 BTU	Element Output	Element Type	Code	£ Ex VAT	£ Inc VAT
500mm	128	437	242	826	150W	A, A+, B, D, E, F, G	89.1250	121.00	**145.20**
600mm	146	498	278	948	150W	A, A+, B, D, E, F, G	89.1251	133.00	**159.60**

Tuscan Square - Matt Grey 1200mm Height

Width	Delta △T30 Watts	Delta △T30 BTU	Delta △T50 Watts	Delta △T50 BTU	Element Output	Element Type	Code	£ Ex VAT	£ Inc VAT
500mm	193	659	366	1249	300W	A, A+, B, D, E, F, G	89.1252	155.00	**186.00**
600mm	221	754	419	1429	300W	A, A+, B, D, E, F, G	89.1253	167.00	**200.40**

Tuscan Square - Matt Grey 1800mm Height

Width	Delta △T30 Watts	Delta △T30 BTU	Delta △T50 Watts	Delta △T50 BTU	Element Output	Element Type	Code	£ Ex VAT	£ Inc VAT
500mm	290	989	548	1869	450W	A, A+, B, D, E, F, G	89.1254	208.00	**249.60**
600mm	332	1133	628	2142	450W	A, A+, B, D, E, F, G	89.1255	227.00	**272.40**

Tuscan Square - Matt Anthracite 800mm Height

Width	Delta △T30 Watts	Delta △T30 BTU	Delta △T50 Watts	Delta △T50 BTU	Element Output	Element Type	Code	£ Ex VAT	£ Inc VAT
500mm	128	437	242	826	150W	A, A+, B, D, E, F, G	89.1256	121.00	**145.20**
600mm	146	498	278	948	150W	A, A+, B, D, E, F, G	89.1257	133.00	**159.60**

Tuscan Square - Matt Anthracite 1200mm Height

Width	Delta △T30 Watts	Delta △T30 BTU	Delta △T50 Watts	Delta △T50 BTU	Element Output	Element Type	Code	£ Ex VAT	£ Inc VAT
500mm	193	659	366	1249	300W	A, A+, B, D, E, F, G	89.1258	155.00	**186.00**
600mm	221	754	419	1429	300W	A, A+, B, D, E, F, G	89.1259	167.00	**200.40**

Tuscan Square - Matt Anthracite 1800mm Height

Width	Delta △T30 Watts	Delta △T30 BTU	Delta △T50 Watts	Delta △T50 BTU	Element Output	Element Type	Code	£ Ex VAT	£ Inc VAT
500mm	290	989	548	1869	450W	A, A+, B, D, E, F, G	89.1260	208.00	**249.60**
600mm	332	1133	628	2142	450W	A, A+, B, D, E, F, G	89.1261	227.00	**272.40**

Gloss White

Pictured 89.1244 Gloss White

Bar Dimensions (mm)

Horizontal Bars 20 x 20mm
Vertical Bars 30 x 30mm

Tuscan Square - Gloss White 800mm Height

Width	Delta △T30 Watts	Delta △T30 BTU	Delta △T50 Watts	Delta △T50 BTU	Element Output	Element Type	Code	£ Ex VAT	£ Inc VAT
500mm	128	437	242	826	150W	A, A+, B, D, E, F, G	89.1244	121.00	**145.20**
600mm	146	498	278	948	150W	A, A+, B, D, E, F, G	89.1245	133.00	**159.60**

Tuscan Square - Gloss White 1200mm Height

Width	Delta △T30 Watts	Delta △T30 BTU	Delta △T50 Watts	Delta △T50 BTU	Element Output	Element Type	Code	£ Ex VAT	£ Inc VAT
500mm	193	659	366	1249	300W	A, A+, B, D, E, F, G	89.1246	155.00	**186.00**
600mm	221	754	419	1429	300W	A, A+, B, D, E, F, G	89.1247	167.00	**200.40**

Tuscan Square - Gloss White 1800mm Height

Width	Delta △T30 Watts	Delta △T30 BTU	Delta △T50 Watts	Delta △T50 BTU	Element Output	Element Type	Code	£ Ex VAT	£ Inc VAT
500mm	290	989	548	1869	450W	A, A+, B, D, E, F, G	89.1248	208.00	**249.60**
600mm	332	1133	628	2142	450W	A, A+, B, D, E, F, G	89.1249	227.00	**272.40**

TECHNICAL INFORMATION

All measurements in Height by Width. Radiators that are electric only are restricted to the heat output of the elements. Element size can be increased to full capacity of rail if using element type B, D, E, F or G. For element types see pages 324-337. For matching valves see pages 338-353. For indirect heating systems only. Tappings are approx. 30mm less than the width of the rail and approx. 80mm off the wall. Projection from wall is approx. 95mm. Price includes radiator and wall fixing sets, valves extra.

Multirail Range

LAUNTON

Pictured 62.0359 Chrome

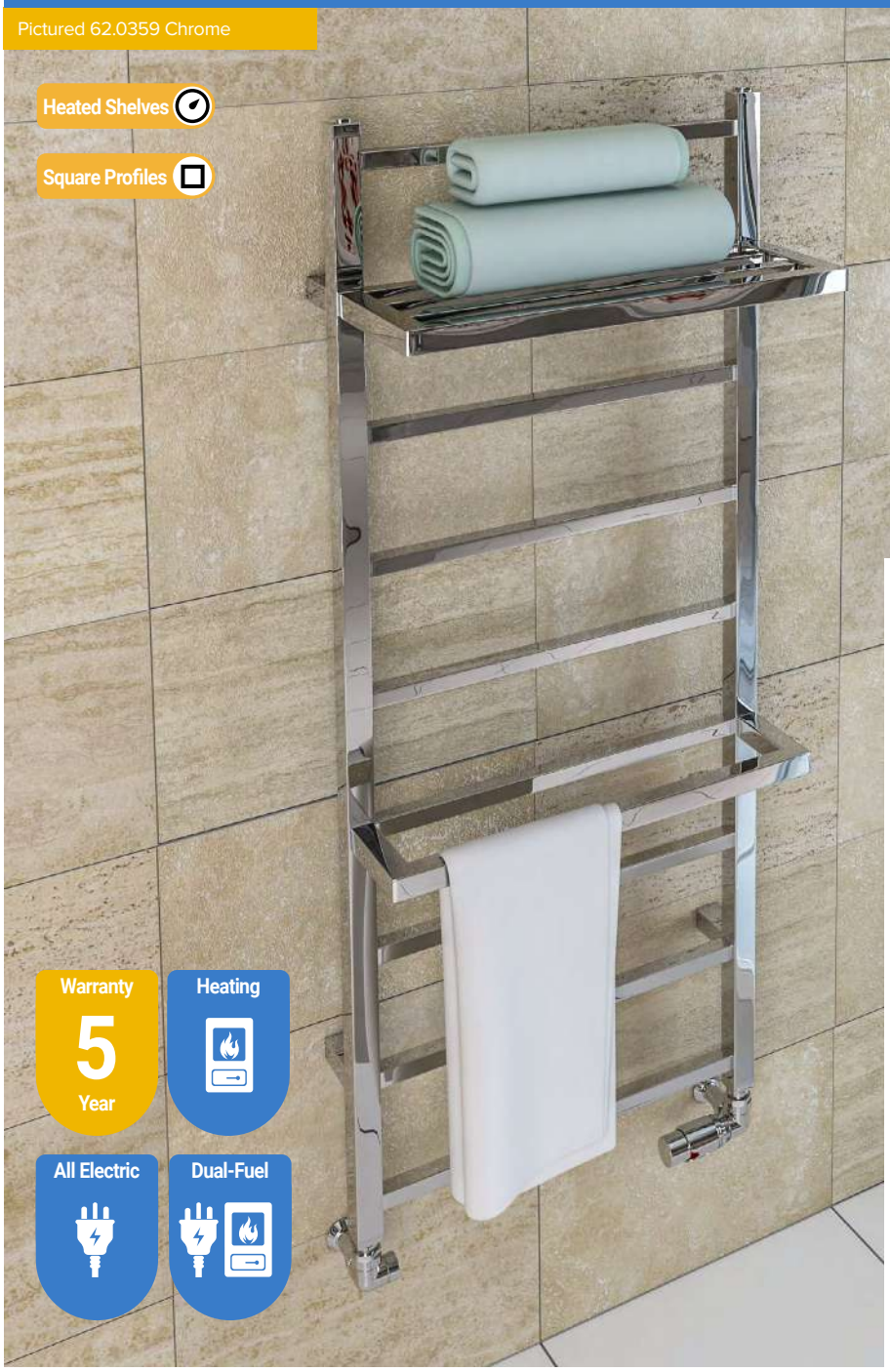

Bar Dimensions (mm)

Horizontal Bars 20 x 20mm
Vertical Bars 30 x 30mm

Pictured 61.0065 Matt Anthracite

Launton - Matt White 1200mm Height

Width	Delta △T30 Watts	Delta △T30 BTU	Delta △T50 Watts	Delta △T50 BTU	Element Output	Element Type	Code	£ Ex VAT	£ Inc VAT
500mm	235	802	444	1515	150W	A, A+, B, D, E, F, G	61.0062	317.00	**380.40**
600mm	268	914	502	1712	300W	A, A+, B, D, E, F, G	61.0063	330.00	**396.00**

Launton - Matt Anthracite 1200mm Height

Width	Delta △T30 Watts	Delta △T30 BTU	Delta △T50 Watts	Delta △T50 BTU	Element Output	Element Type	Code	£ Ex VAT	£ Inc VAT
500mm	235	802	444	1515	150W	A, A+, B, D, E, F, G	61.0064	317.00	**380.40**
600mm	268	914	502	1712	300W	A, A+, B, D, E, F, G	61.0065	330.00	**396.00**

Launton - Chrome 1200mm Height

Width	Delta △T30 Watts	Delta △T30 BTU	Delta △T50 Watts	Delta △T50 BTU	Element Output	Element Type	Code	£ Ex VAT	£ Inc VAT
500mm	155	529	293	1000	150W	A, A+, B, D, E, F, G	61.0066	361.00	**433.20**
600mm	176	601	334	1139	150W	A, A+, B, D, E, F, G	62.0359	375.00	**450.00**

Launton towel radiator has built-in shelves that are also heated. This model will be the solution to dry all the towels of a big family.

FEATURES

- Tested to BS EN 442 standards
- Built-in heated shelves
- Can be single, dual fuel or all electric
- 5 Year Manufacturer's Warranty*

* With conditions

Technical Tables & Drawings
Page 370-371

TECHNICAL INFORMATION

All measurements in Height by Width. Radiators that are electric only are restricted to the heat output of the elements. Element size can be increased to full capacity of rail if using element type B, D, E, F or G. For element types see pages 324-337. For matching valves see pages 338-353. For indirect heating systems only. Tappings are approx. 30mm less than the width of the rail and approx. 70-85mm off the wall. Projection from the wall is 255-270mm. Price includes radiator and wall fixing sets, valves extra.

Multirail Range

HADDENHAM

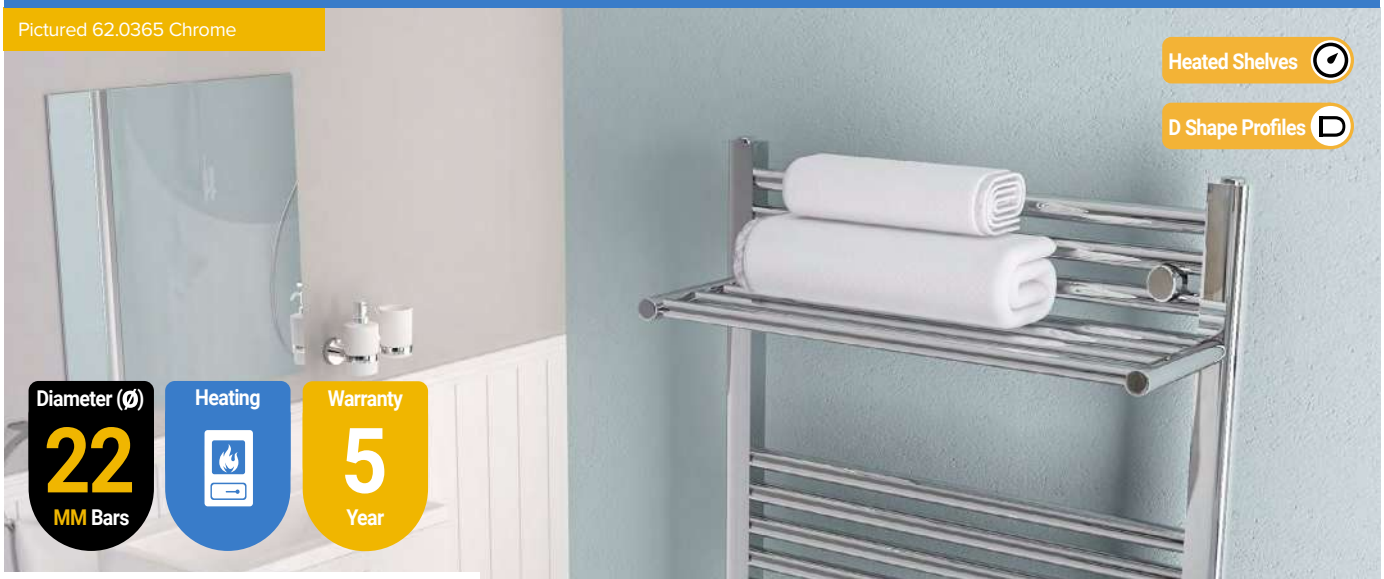

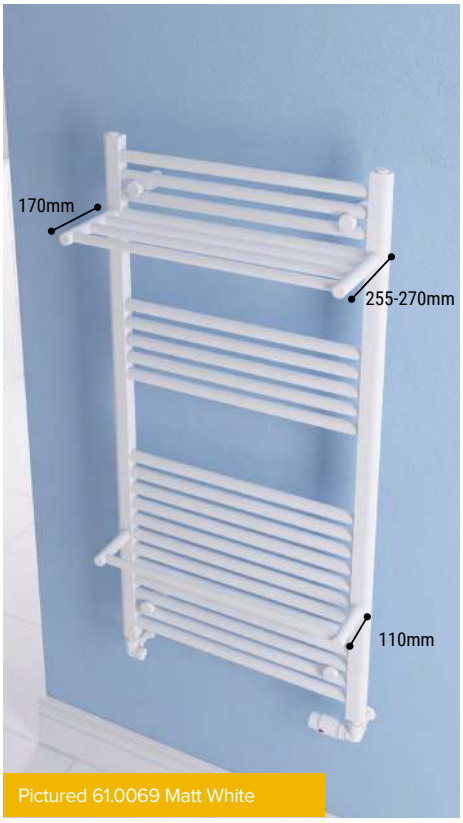

Haddenham - Matt White 1200mm Height

Width	Delta △T30 Watts	Delta △T30 BTU	Delta △T50 Watts	Delta △T50 BTU	Element Output	Element Type	Code	£ Ex VAT	£ Inc VAT
500mm	302	1030	574	1958	N/A	N/A	61.0068	227.00	**272.40**
600mm	356	1214	676	2306	N/A	N/A	61.0069	236.00	**283.20**

Haddenham - Matt Anthracite 1200mm Height

Width	Delta △T30 Watts	Delta △T30 BTU	Delta △T50 Watts	Delta △T50 BTU	Element Output	Element Type	Code	£ Ex VAT	£ Inc VAT
500mm	302	1030	574	1958	N/A	N/A	61.0070	227.00	**272.40**
600mm	356	1214	676	2306	N/A	N/A	62.0363	236.00	**283.20**

Haddenham - Chrome 1200mm Height

Width	Delta △T30 Watts	Delta △T30 BTU	Delta △T50 Watts	Delta △T50 BTU	Element Output	Element Type	Code	£ Ex VAT	£ Inc VAT
500mm	199	679	388	1324	N/A	N/A	62.0364	258.00	**309.60**
600mm	239	815	458	1562	N/A	N/A	62.0365	277.00	**332.40**

Haddenham towel radiator is a perfect alternative for standard towel radiators thanks to its heated shelves and big capacity of drying many towels at once.

FEATURES

- 22mm diameter horizontal round tubes
- Tested to BS EN 442 standardss
- Built-in heated shelves
- Not suitable for elements
- 5 Year Manufacturer's Warranty*

* With conditions

Technical Tables & Drawings
Page 370-371

TECHNICAL INFORMATION

All measurements in Height by Width. Not suitable for elements. For matching valves see pages 338-353. For indirect heating systems only. Tappings are approx. 45mm less than the width of the rail and approx. 70-85mm off the wall. Projection from the wall is approx. 255-270mm. Price includes radiator and wall fixing sets, valves extra.

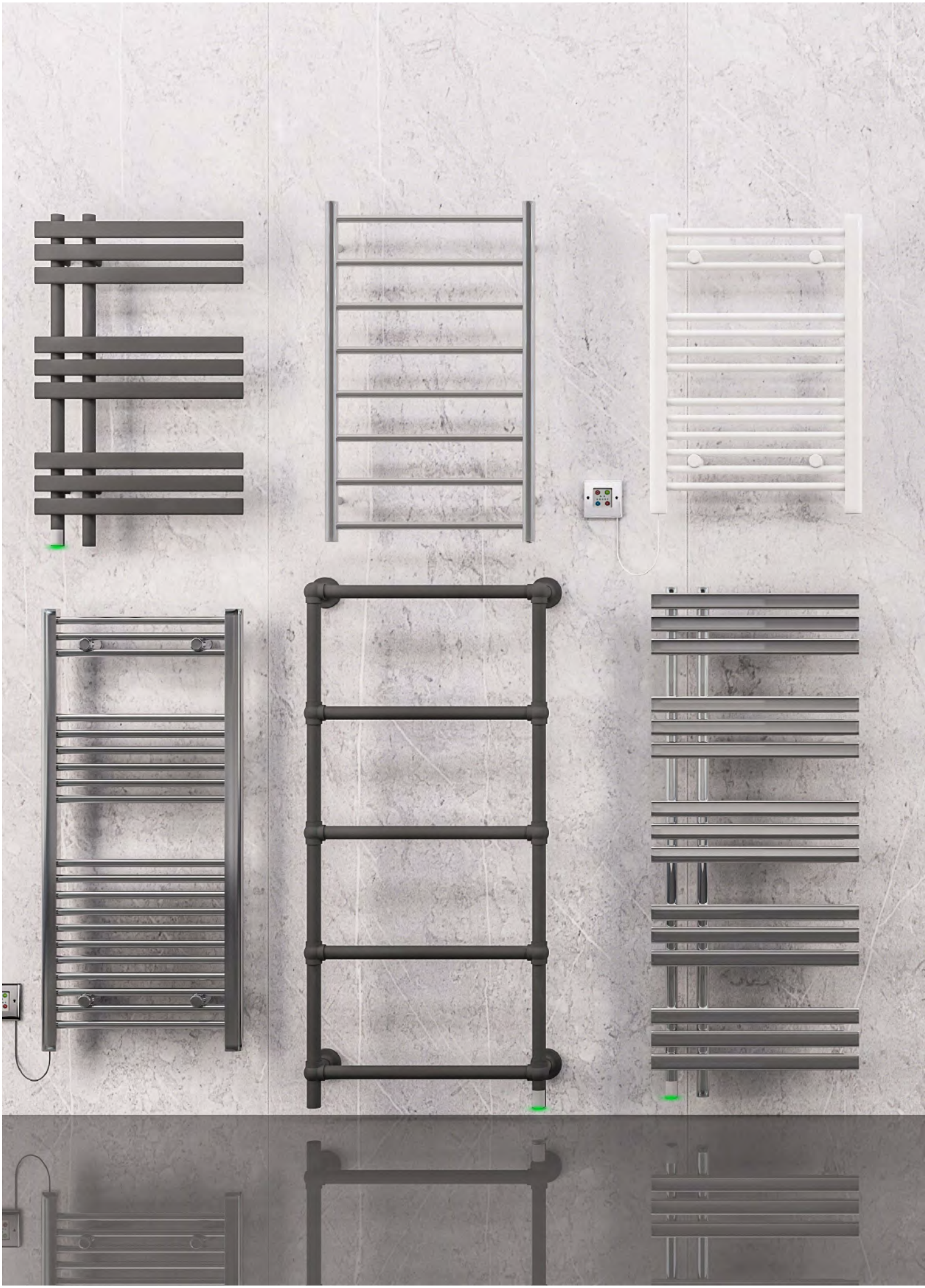

All Electric Range

Using modern technology benefits, the All Electric Range consists of lighter towel rails and energy efficient daily usage.

Contents

Cortona Electric - Available in 2 colours - **NEW PRODUCT**	70-71
Derwent Aluminium Dry Element - Available in 3 colours	72-73
Biava Dry Element Straight, Available in 4 colours	74-75
Loddon Dry Element - Available in 4 colours	76-77
Brockworth All Electric - Available in 3 colours	78
Kennet Dry Element, Matt Anthracite & Chrome	79

• NEW PRODUCT HERE •

All Electric Range

CORTONA ELECTRIC - WHITE

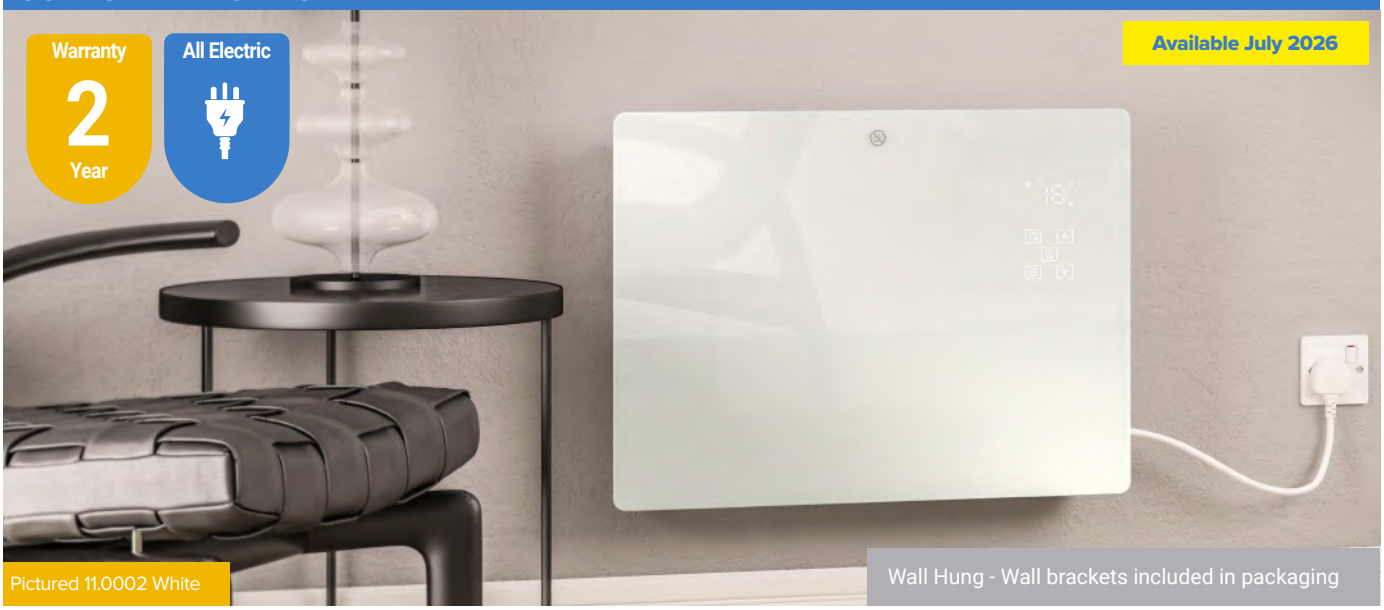

Pictured 11.0002 White

Wall Hung - Wall brackets included in packaging

Pictured 11.0003 White

Floor standing - Feet included in packaging

Cortona Electric - White

Size H x W	Watts	Code	£ Ex VAT	£ Inc VAT
465 x 520mm	1000	11.0001	174.00	**208.80**
465 x 650mm	1500	11.0002	193.00	**231.60**
465 x 770mm	2000	11.0003	214.00	**256.80**

Combining sleek design with modern performance, this electric radiator features a tempered glass front for a clean, contemporary look. It heats instantly—just plug in and enjoy. With smart app and voice control, managing your comfort is effortless. Stylish, efficient, and easy to use, it's ideal for modern living.

FEATURES

- Starts heating rapidly - Aluminium X element heater
- 4mm thick tempered white glass fitted in the front
- Voltage: 240V , 50/60Hz - Appliance class: Class I
- Lot20 compliant & LED control panel display
- Wi-Fi & APP Control (Smart Life APP for seamless control)
- Google Home / Alexa voice control
- No fluid filling required, just Connect and Go
- 5° C - 50°C temperature options
- 7 days & 24 hours programmable (can only be done on the APP)
- Comes with built-in timer, 1 - 24 hour setting
- KSD overheating protection - Open window detection
- Comfort / Eco / Anti-Freeze modes & Child Lock function
- Comes with 3 pin plug fitted - IP rating: IP24
- Radiator complies with BS EN 442 & glass complies with BS EN 12150 standards
- Wall-mounted or floor-standing usage with included feet
- 2 Year Manufacturer's Warranty*

* With conditions

Digital Touch Screen - Close Up

Wi-Fi 2.4 Ghz & APP control (Android & Apple IOS)

This product is electric only installation and cannot be used on a central heating system.

TECHNICAL INFORMATION

All measurements in Height by Width.
Cannot be fitted upside down. Cannot be fitted vertically.
Cable length 1.5m & colour white.
Projection from wall 101mm.
Radiator thickness 75mm.
Radiator height with feet fitted 510mm.
Radiator material mild steel.
Glass in the front 4mm tempered glass.

Technical Tables & Drawings
Page 372-373

All Electric Range

CORTONA ELECTRIC - BLACK

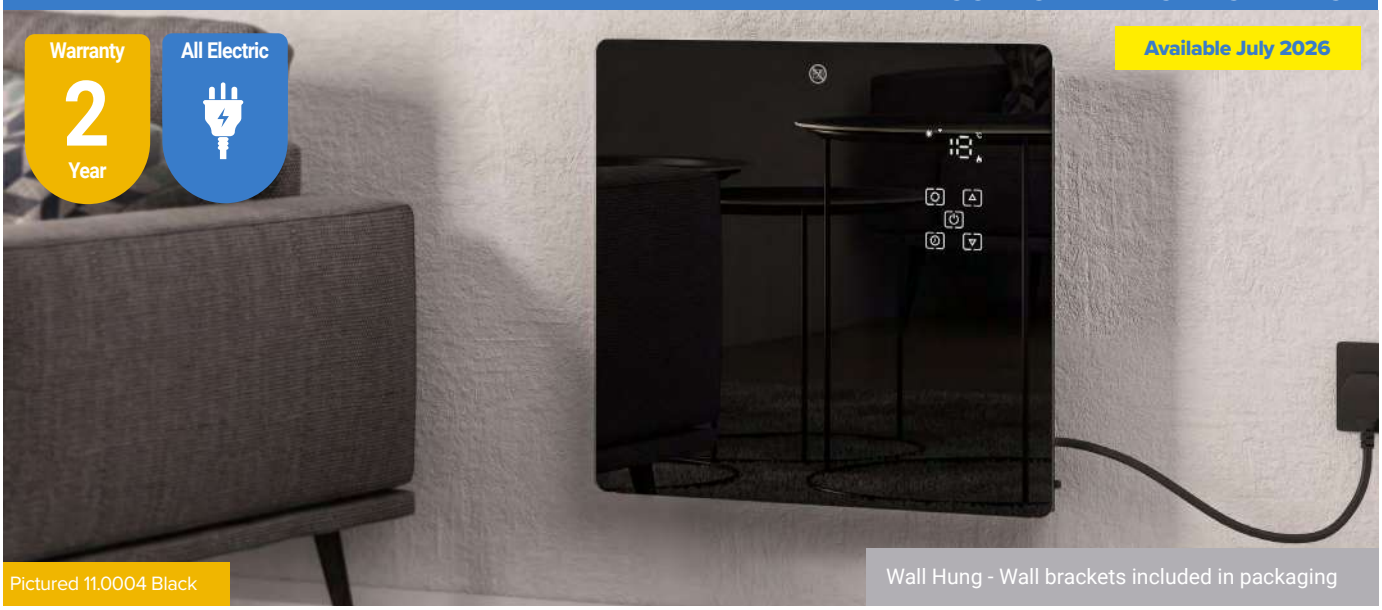

Pictured 11.0004 Black

Wall Hung - Wall brackets included in packaging

Pictured 11.0006 Black

Floor standing - Feet included in packaging

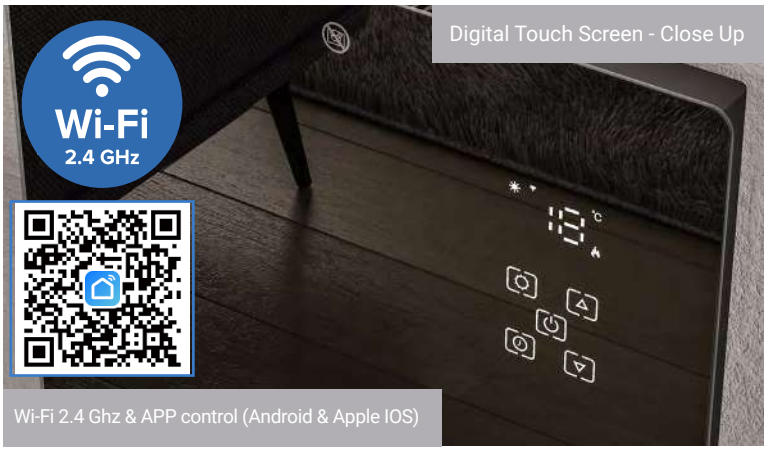

Digital Touch Screen - Close Up

Wi-Fi 2.4 Ghz & APP control (Android & Apple IOS)

This product is electric only installation and cannot be used on a central heating system.

Cortona Electric - Black

Size H x W	Watts	Code	£ Ex VAT	£ Inc VAT
465 x 520mm	1000	11.0004	169.00	**202.80**
465 x 650mm	1500	11.0005	187.00	**224.40**
465 x 770mm	2000	11.0006	209.00	**250.80**

Combining sleek design with modern performance, this electric radiator features a tempered glass front for a clean, contemporary look. It heats instantly—just plug in and enjoy. With smart app and voice control, managing your comfort is effortless. Stylish, efficient, and easy to use, it's ideal for modern living.

FEATURES

- Starts heating rapidly - Aluminium X element heater
- 4mm thick tempered black glass fitted in the front
- Voltage: 240V , 50/60Hz - Appliance class: Class I
- Lot20 compliant & LED control panel display
- Wi-Fi & APP Control (Smart Life APP for seamless control)
- Google Home / Alexa voice control
- No fluid filling required, just Connect and Go
- 5° C - 50°C temperature options
- 7 days & 24 hours programmable (can only be done on the APP)
- Comes with built-in timer, 1 - 24 hour setting
- KSD overheating protection - Open window detection
- Comfort / Eco / Anti-Freeze modes & Child Lock function
- Comes with 3 pin plug fitted - IP rating: IP24
- Radiator complies with BS EN 442 & glass complies with BS EN 12150 standards
- Wall-mounted or floor-standing usage with included feet
- 2 Year Manufacturer's Warranty*

* With conditions

TECHNICAL INFORMATION

All measurements in Height by Width.
Cannot be fitted upside down. Cannot be fitted vertically.
Cable length 1.5m & colour black.
Projection from wall 101mm.
Radiator thickness 75mm.
Radiator height with feet fitted 510mm.
Radiator material mild steel.
Glass in the front 4mm tempered glass.

Technical Tables & Drawings
Page 372-373

All Electric Range

DERWENT ALUMINIUM DRY ELEMENT

Pictured 41.0491 Matt White with 41.0503 Towel Hangers

Pictured 41.0494 Matt Anthracite

A dry element aluminium radiator with sharp lines in the front and chrome cover caps at the top and bottom that will add fashion to your desired room. With a choice of towel hangers, your bathroom can also be heated while drying your towels. Available in vertical style and 3 colours options.

This product is electric only installation and cannot be used on a central heating system.

FEATURES

- No fluid filling required, just Connect and Go
- Comes with built-in thermostat, 35° C - 70°C temperature setting
- Comes with built-in timer, 2 - 8 hour setting
- Comes with concealed wiring
- IPX4 certificate (Zone 2 and 3)
- Radiators come with chrome cover caps on top and bottom
- Tested to BS EN 442 standards
- 2 Year Manufacturer's Warranty*

* With conditions

TECHNICAL INFORMATION

All measurements in Height by Width.
Cannot be fitted upside down. Cannot be fitted horizontally.
Each vertical aluminium panel is 100mm wide.
Projection from wall 115mm.
Radiator material aluminium.
Towel Hanger material Stainless Steel.

Technical Tables & Drawings
Page 372-373

All Electric Range

DERWENT ALUMINIUM DRY ELEMENT

Derwent Dry Element Vertical Aluminium Radiators - Matt White

Size H x W	Watts	BTU	Code	£ Ex VAT	£ Inc VAT
1800 x 304mm	600	2047	41.0489	326.00	**391.20**
1800 x 404mm	800	2730	41.0490	402.00	**482.40**
1800 x 504mm	1000	3412	41.0491	476.00	**571.20**
1800 x 604mm	1200	4094	41.0492	533.00	**639.60**

Derwent Dry Element Vertical Aluminium Radiators - Matt Anthracite

Size H x W	Watts	BTU	Code	£ Ex VAT	£ Inc VAT
1800 x 304mm	600	2047	41.0493	326.00	**391.20**
1800 x 404mm	800	2730	41.0494	402.00	**482.40**
1800 x 504mm	1000	3412	41.0495	476.00	**571.20**
1800 x 604mm	1200	4094	41.0496	533.00	**639.60**

Derwent Dry Element Vertical Aluminium Radiators - Matt Black

Size H x W	Watts	BTU	Code	£ Ex VAT	£ Inc VAT
1800 x 304mm	600	2047	41.0497	326.00	**391.20**
1800 x 404mm	800	2730	41.0498	402.00	**482.40**
1800 x 504mm	1000	3412	41.0499	476.00	**571.20**
1800 x 604mm	1200	4094	41.0500	533.00	**639.60**

Prices include radiator and wall fixing sets, towel hangers are extra.

THERMOSTAT FUNCTION

Comes with built-in thermostat
35° C - 70°C temperature setting

TIMING FUNCTION

Comes with built-in timer
2 - 8 hour setting
* Not programmable

IPX4 certificate (Zone 2 and 3)

Warranty 2 Year

All Electric

Pictured 41.0500 Matt Black with 41.0504 Towel Hangers

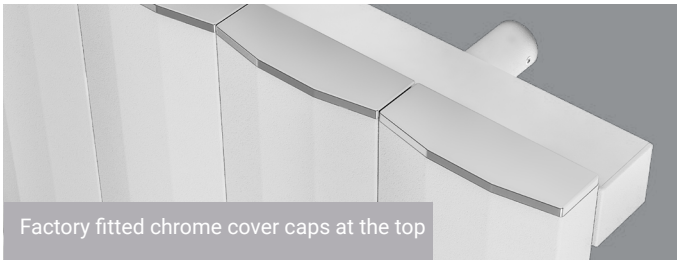

Factory fitted chrome cover caps at the top

Factory fitted chrome cover caps at the bottom

Derwent Towel Hangers - Mirror Polished Premium

Description	Code	£ Ex VAT	£ Inc VAT
Towel Hanger 304mm	41.0501	54.00	**64.80**
Towel Hanger 404mm	41.0502	57.00	**68.40**
Towel Hanger 504mm	41.0503	66.00	**79.20**
Towel Hanger 604mm	41.0504	72.00	**86.40**

Derwent Towel Hangers must be fitted before installation.

All Electric Range

BIAVA DRY ELEMENT - STRAIGHT

Chrome

Pictured 47.0002 Chrome with 67.0013

Integrated On/Off Button

On/Off Button

Pictured 47.0015 Chrome

Biava Dry Element Towel Rail - Chrome [Integrated On/Off Button]

Size H x W	Watts	BTU	Code	£ Ex VAT	£ Inc VAT
1100 x 500mm	400	1365	47.0015	297.00	**356.40**

Biava Dry Element Towel Rail - Matt Black [Integrated On/Off Button]

Size H x W	Watts	BTU	Code	£ Ex VAT	£ Inc VAT
1100 x 500mm	400	1365	47.0055	249.00	**298.80**

Biava Dry Element Towel Rail - Chrome

Size H x W	Watts	BTU	Code	£ Ex VAT	£ Inc VAT
700 x 500mm	250	853	47.0001	202.00	**242.40**
700 x 600mm	300	1024	47.0003	222.00	**266.40**
1100 x 500mm	400	1365	47.0002	268.00	**321.60**
1100 x 600mm	500	1706	47.0004	305.00	**366.00**

Biava Dry Element Towel Rail - Gloss White

Size H x W	Watts	BTU	Code	£ Ex VAT	£ Inc VAT
700 x 500mm	250	853	47.0005	154.00	**184.80**
700 x 600mm	300	1024	47.0007	174.00	**208.80**
1100 x 500mm	400	1365	47.0006	210.00	**252.00**
1100 x 600mm	500	1706	47.0008	238.00	**285.60**

Biava Dry Element Towel Rail - Matt Anthracite

Size H x W	Watts	BTU	Code	£ Ex VAT	£ Inc VAT
700 x 500mm	250	853	47.0009	171.00	**205.20**
700 x 600mm	300	1024	47.0011	191.00	**229.20**
1100 x 500mm	400	1365	47.0010	226.00	**271.20**
1100 x 600mm	500	1706	47.0012	262.00	**314.40**

Biava Dry Element Towel Rail - Matt Black

Size H x W	Watts	BTU	Code	£ Ex VAT	£ Inc VAT
700 x 500mm	250	853	47.0051	171.00	**205.20**
700 x 600mm	300	1024	47.0052	191.00	**229.20**
1100 x 500mm	400	1365	47.0053	226.00	**271.20**
1100 x 600mm	500	1706	47.0054	262.00	**314.40**

FEATURES

- 19mm diameter horizontal round tubes
- No fluid filling required
- Just Connect and Go
- Material of towel rail: Mild Steel
- IPX4 Certificates (Zone 2 and 3)
- Compatible with the Crafton & Crafton II Temperature Control Plates
- 2 Year Manufacturer's Warranty*

* With conditions

Technical Tables & Drawings
Page 372-373

This product is electric only installation and cannot be used on a central heating system.

TECHNICAL INFORMATION

All measurements in Height by Width. This rail is reversible. Can not be fitted upside down.

Warranty 2 Year

Diameter (Ø) 19 MM Bars

All Electric

All Electric Range

BIAVA DRY ELEMENT - STRAIGHT

Gloss White

Pictured 47.0007 Gloss White with 67.0004

Matt Black

Pictured 47.0054 Matt Black with 67.0012

Matt Anthracite

Pictured 47.0012 Matt Anthracite with 67.0011

White Panel | Anthracite Panel | Chrome Effect Panel

Crafton II Temperature Control Panel

Description	Code	£ Ex VAT	£ Inc VAT
Crafton II Temperature Control Panel White	67.0010	82.00	**98.40**
Crafton II Temperature Control Panel Anthracite	67.0011	93.00	**111.60**
Crafton II Temperature Control Panel Black	67.0012	93.00	**111.60**
Crafton II Temperature Control Panel Chrome Effect	67.0013	88.00	**105.60**
Crafton II Temperature Control Panel Brass Effect	67.0014	97.00	**116.40**

This item is an additional extra that can be used with all colours of the Biava Dry Element Towel Rails. Please see page 337 for more product details and more colours.

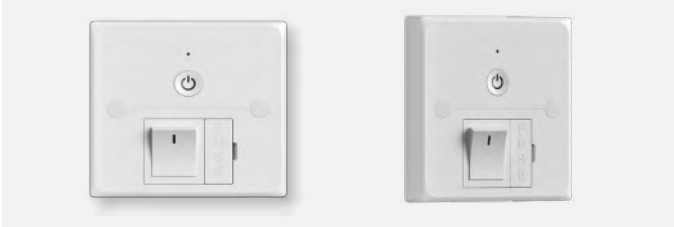

Wi-Fi On/Off Spur Switch

Description	Code	£ Ex VAT	£ Inc VAT
Wi-Fi On/Off Spur Switch White	41.0799	39.00	**46.80**

This item is an additional extra that can be used with all colours of the Biava Dry Element Towel Rails. Please see page 337 for more product details.

All Electric Range

LODDON DRY ELEMENT

Pictured 47.0042 Chrome

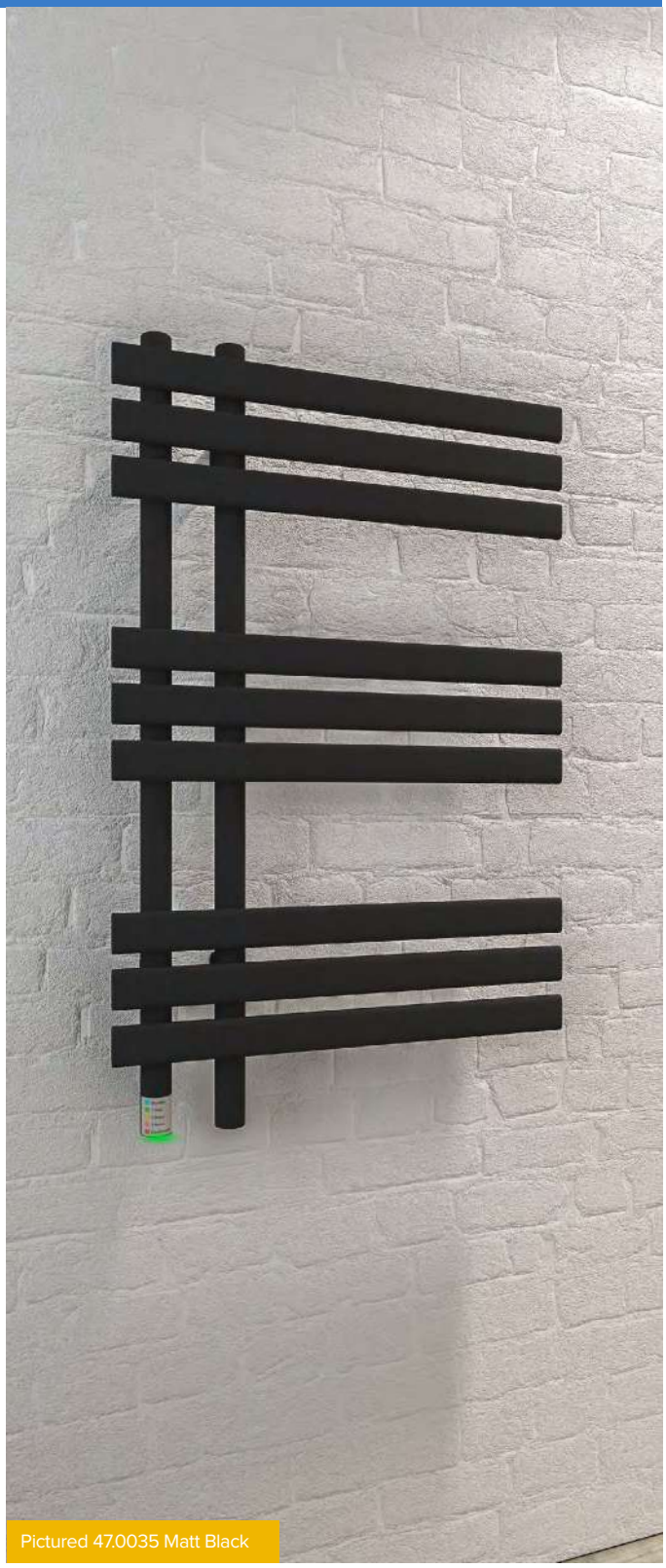

Pictured 47.0035 Matt Black

FEATURES
- No fluid filling required
- Just connect and Go
- Material of Towel Rail : Mild Steel
- IPX4 certificates (Zone 2 and 3)
- 4 colours available from stock
- 2 Year Manufacturer's Warranty*

*With conditions

Technical Tables & Drawings
Page 374-375

Warranty 2 Year

All Electric

This product is electric only installation and cannot be used on a central heating system.

All Electric Range

LODDON DRY ELEMENT

Loddon Dry Element Towel Rail - Matt White

Size H x W	Watts	BTU	Code	£ Ex VAT	£ Inc VAT
800 x 500mm*	300	1024	47.0027	423.00	**507.60**
800 x 600mm*	350	1195	47.0028	446.00	**535.20**
1200 x 500mm	450	1536	47.0029	520.00	**624.00**
1200 x 600mm	500	1707	47.0030	549.00	**658.80**

Loddon Dry Element Towel Rail - Matt Black

Size H x W	Watts	BTU	Code	£ Ex VAT	£ Inc VAT
800 x 500mm*	300	1024	47.0035	423.00	**507.60**
800 x 600mm*	350	1195	47.0036	446.00	**535.20**
1200 x 500mm	450	1536	47.0037	520.00	**624.00**
1200 x 600mm	500	1707	47.0038	549.00	**658.80**

Loddon Dry Element Towel Rail - Matt Anthracite

Size H x W	Watts	BTU	Code	£ Ex VAT	£ Inc VAT
800 x 500mm*	300	1024	47.0031	423.00	**507.60**
800 x 600mm*	350	1195	47.0032	446.00	**535.20**
1200 x 500mm	450	1536	47.0033	520.00	**624.00**
1200 x 600mm	500	1707	47.0034	549.00	**658.80**

*The total height of this rail is 780mm

Loddon Dry Element Towel Rail - Chrome

Size H x W	Watts	BTU	Code	£ Ex VAT	£ Inc VAT
800 x 500mm*	300	1024	47.0039	502.00	**602.40**
800 x 600mm*	350	1195	47.0040	561.00	**673.20**
1200 x 500mm	450	1536	47.0041	588.00	**705.60**
1200 x 600mm	500	1707	47.0042	646.00	**775.20**

*The total height of this rail is 780mm

TECHNICAL INFORMATION

All measurements in Height by Width. Can not be fitted upside down. Comes with an information label in the front that can be removed. Projection from wall 100mm.

Colour Coded Boost Function

The Loddon Dry Element towel rail has a colour coded boost function which allows the length of time the rail runs for to be set.

It can be on standby, 1 hour, 2 hours, 3 hours or continuously running.

Blue: Standby | Green: 1 Hour | Yellow: 2 Hours | Pink: 3 Hours | Red: Continuous

Concealed or Exposed Wiring Option

The Loddon Dry Element towel rail can be installed with two different wiring options; an exposed wiring installation or concealed wiring installation.

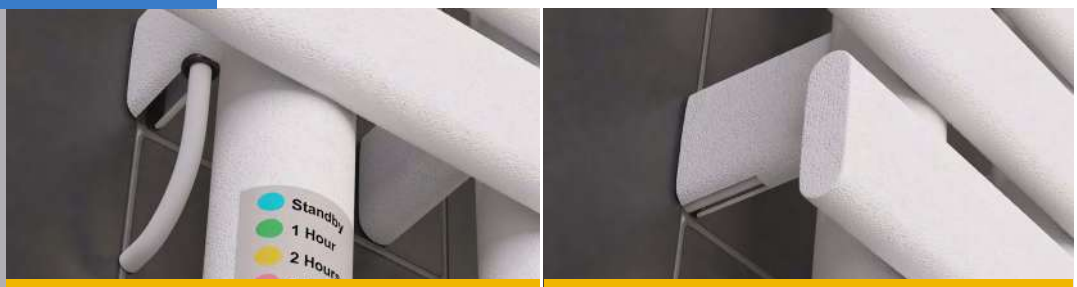

Exposed Wiring | Concealed Wiring

Matt White

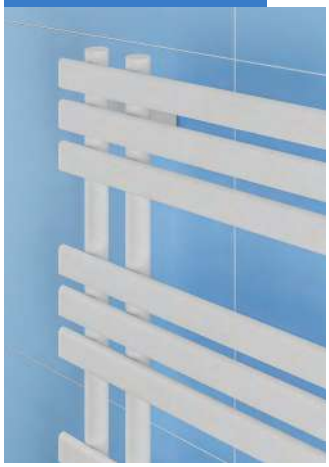

Matt Anthracite

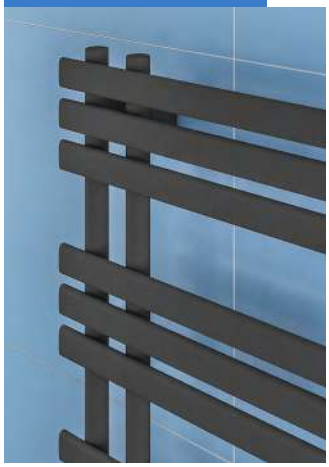

Matt Black

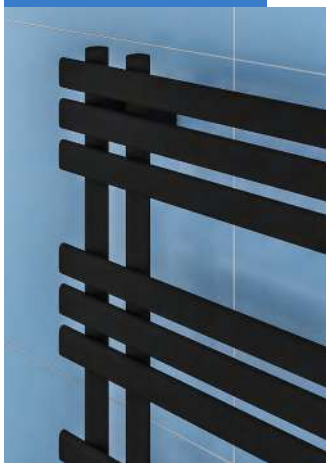

Chrome

All Electric Range

BROCKWORTH ALL ELECTRIC - FLUID FILLED

Bar Dimensions (mm)

Horizontal Bars 60 x 12mm

Pictured 41.0784 Matt White

Pictured 41.0785 Matt Anthracite

Pictured 41.0786 Matt Black

The sophisticated design of this towel rail perfectly combines elegance with practicality. Comes with a pre-fitted Wi-Fi enabled heating element and pre-filled with fluid, it's ready to use straight away. Simply connect, and you're all set. Available in three colours; matt white, matt anthracite and matt black.

FEATURES

- 60 x 12mm. horizontal bars
- Comes ready to use, fitted with Type B Wi-Fi element (700W) & fluid filled
- Element fitted to left hand side
- Element with IP rating X4
- Tested to BS EN 442 standards
- Can **not** be reverse handed
- All electric only
- 2 Year manufacturer's warranty*

* With conditions

Technical Tables & Drawings
Page 374-375

Brockworth All Electric Towel Rail - Matt White

Size H x W	Watts	BTU	Element Output	Element Type	Code	£ Ex VAT	£ Inc VAT
1200 x 500mm	700	2387	700W	Type B Wi-Fi	41.0784	429.00	**514.80**

Brockworth All Electric Towel Rail - Matt Anthracite

Size H x W	Watts	BTU	Element Output	Element Type	Code	£ Ex VAT	£ Inc VAT
1200 x 500mm	700	2387	700W	Type B Wi-Fi	41.0785	429.00	**514.80**

Brockworth All Electric Towel Rail - Matt Black

Size H x W	Watts	BTU	Element Output	Element Type	Code	£ Ex VAT	£ Inc VAT
1200 x 500mm	700	2387	700W	Type B Wi-Fi	41.0786	429.00	**514.80**

Type B Wi-Fi element comes fitted at the factory, element cannot be ordered separately.

TECHNICAL INFORMATION

All measurements in Height by Width. Brockworth All Electric towel rail is all electric and to be used all electric only. Type B Wi-Fi Element (700W) is factory fitted & fluid filled. Element fitted to left hand side. For element technical information refer to Page 325. This towel rail is approx. 96-106mm off the wall. Price includes radiator and wall fixing sets.

All Electric Range

KENNET DRY ELEMENT

Pictured 47.0049 Chrome

Pictured 47.0044 Matt Anthracite

FEATURES
- No fluid filling required
- Just connect and Go
- Material of Towel Rail : Mild Steel
- IPX4 certificates (Zone 2 and 3)
- 2 colours available from stock
- 2 Year Manufacturer's Warranty*

*With conditions

Technical Tables & Drawings
Page 374-375

This product is electric only installation and cannot be used on a central heating system.

Kennet Dry Element Towel Rail - Matt Anthracite

Size H x W	Watts	BTU	Code	£ Ex VAT	£ Inc VAT
700 x 500mm*	120	410	47.0043	395.00	**474.00**
700 x 600mm*	150	512	47.0044	418.00	**501.60**
1200 x 500mm**	200	683	47.0045	469.00	**562.80**
1200 x 600mm**	230	785	47.0046	508.00	**609.60**

Kennet Dry Element Towel Rail - Chrome

Size H x W	Watts	BTU	Code	£ Ex VAT	£ Inc VAT
700 x 500mm*	120	410	47.0047	451.00	**541.20**
700 x 600mm*	150	512	47.0048	470.00	**564.00**
1200 x 500mm**	200	683	47.0049	532.00	**638.40**
1200 x 600mm**	230	785	47.0050	572.00	**686.40**

* Height shown excludes bottom control leg. Total height is 744.5mm
** Height shown excludes bottom control leg. Total height is 1253mm

TECHNICAL INFORMATION

All measurements in Height by Width. Can not be fitted upside down. Comes with an information label in the front that can be removed. Projection from wall 130mm.

Colour Coded Boost Function

The Kennet Dry Element towel rail has a colour coded boost function which allows the length of time the rail runs for to be set. It can be on standby, 1 hour, 2 hours, 3 hours or continuously running.

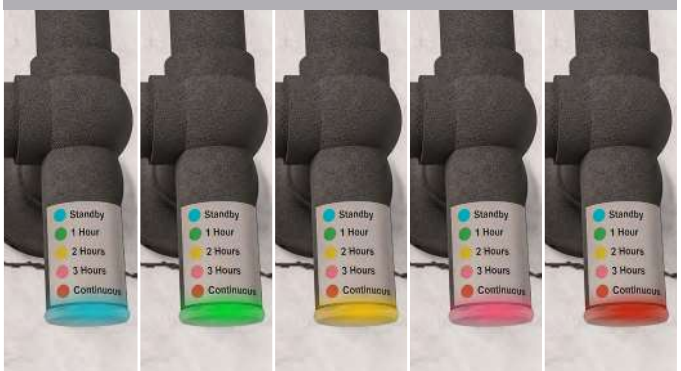

Standby | 1 Hour | 2 Hours | 3 Hours | Continuous

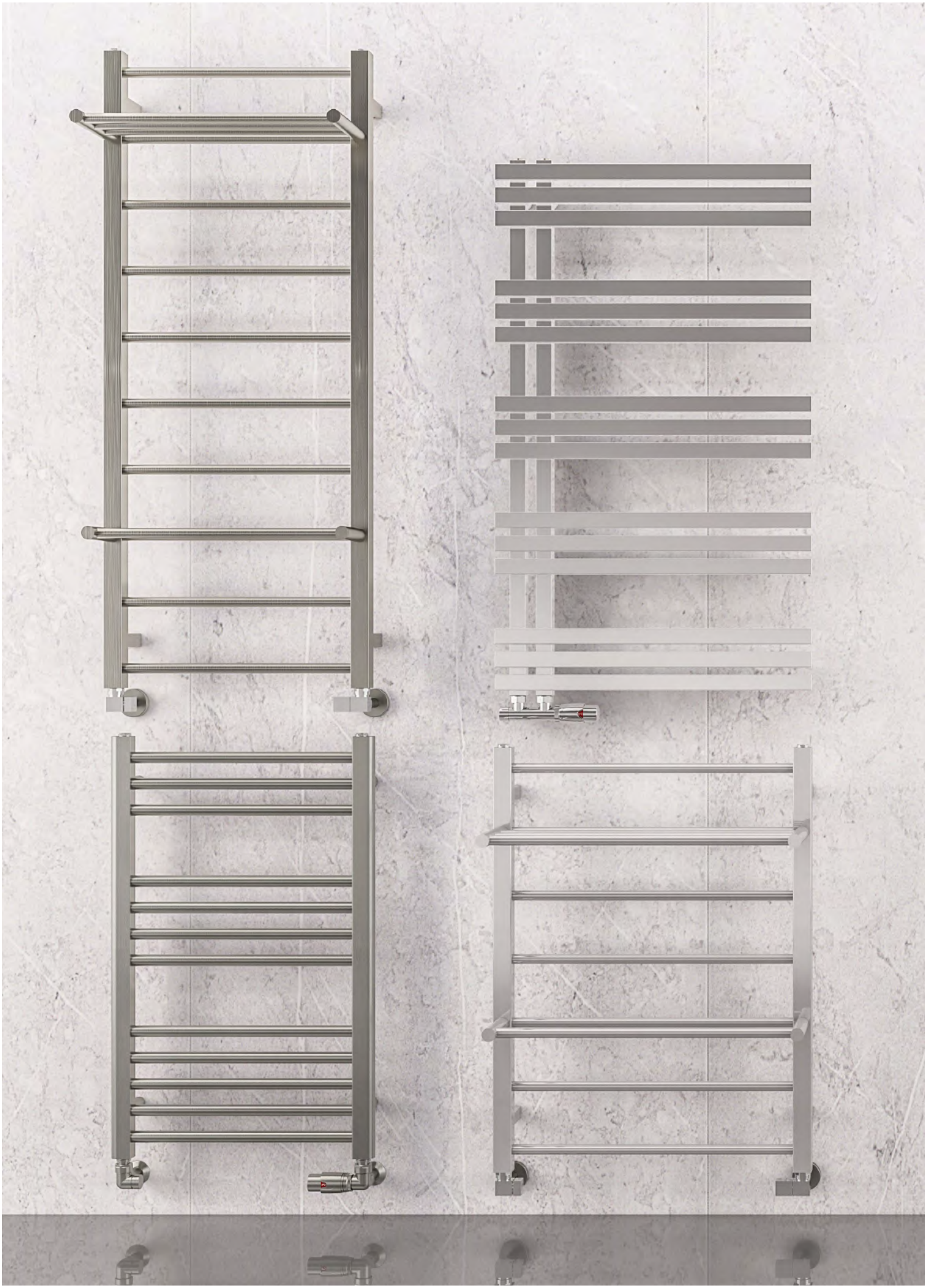

Stainless Steel Range

Whilst retaining the features of a towel rail, the stainless steel range produces a stylish contemporary look.

Contents

Wendover Straight Stainless Steel, Polished - **NEW SIZES**	82-83
Wendover Straight Stainless Steel, Brushed - **NEW SIZES**	84-85
Violla II, Polished	86
Violla II, Brushed	87
Rizano, Polished	88
Velino, Polished	89
Velino, Brushed	89

• NEW SIZES HERE •

Stainless Steel Range

WENDOVER STRAIGHT STAINLESS STEEL - POLISHED

Pictured 41.0787 Polished

Mirror Polished Surface (Chrome Effect)

Pictured 41.0790 Polished

Rear fixing wall brackets

Introducing the Wendover Straight Multirail, now available in a sleek stainless steel version. Combining the practicality of a towel rail with the durability and modern elegance of stainless steel, it's the perfect addition to any stylish bathroom.

FEATURES

- Grade 304 Stainless Steel material
- 22mm diameter horizontal round tubes
- 40 x 30mm vertical profiles
- Mirror polished surface (Chrome effect)
- Tested to BS EN 442 standards
- Can be single or dual fuel, or all electric
- 5 Year manufacturer's warranty*

* With conditions

Technical Tables & Drawings
Page 374-375

Tube Diameter
22mm

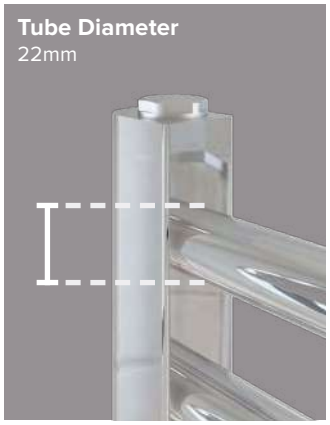

Warranty 5 Year

Heating

All Electric

Dual-Fuel

Stainless Steel Range

WENDOVER STRAIGHT STAINLESS STEEL - POLISHED

Wendover Straight Stainless Steel Multirail - Polished 800mm Height

Width	Delta △T30 Watts	Delta △T30 BTU	Delta △T50 Watts	Delta △T50 BTU	Element Output	Element Type	Code	£ Ex VAT	£ Inc VAT
400mm	92	314	175	597	150W	A, A+, B, D, E, F, G	41.1187	189.00	**226.80**
500mm	108	369	206	703	150W	A, A+, B, D, E, F, G	41.0787	198.00	**237.60**
600mm	125	427	237	809	150W	A, A+, B, D, E, F, G	41.0788	213.00	**255.60**

Wendover Straight Stainless Steel Multirail - Polished 1000mm Height

Width	Delta △T30 Watts	Delta △T30 BTU	Delta △T50 Watts	Delta △T50 BTU	Element Output	Element Type	Code	£ Ex VAT	£ Inc VAT
400mm	111	379	215	734	150W	A, A+, B, D, E, F, G	41.1190	214.00	**256.80**
500mm	131	447	254	867	150W	A, A+, B, D, E, F, G	41.1191	226.00	**271.20**
600mm	151	515	293	1000	150W	A, A+, B, D, E, F, G	41.1192	242.00	**290.40**

Wendover Straight Stainless Steel Multirail - Polished 1200mm Height

Width	Delta △T30 Watts	Delta △T30 BTU	Delta △T50 Watts	Delta △T50 BTU	Element Output	Element Type	Code	£ Ex VAT	£ Inc VAT
400mm	132	451	259	884	150W	A, A+, B, D, E, F, G	41.1188	252.00	**302.40**
500mm	157	536	309	1054	150W	A, A+, B, D, E, F, G	41.0789	268.00	**321.60**
600mm	181	618	358	1221	300W	A, A+, B, D, E, F, G	41.0790	289.00	**346.80**

Wendover Straight Stainless Steel Multirail - Polished 1400mm Height

Width	Delta △T30 Watts	Delta △T30 BTU	Delta △T50 Watts	Delta △T50 BTU	Element Output	Element Type	Code	£ Ex VAT	£ Inc VAT
400mm	157	536	308	1051	300W	A, A+, B, D, E, F, G	41.1193	291.00	**349.20**
500mm	189	645	370	1262	300W	A, A+, B, D, E, F, G	41.1194	310.00	**372.00**
600mm	221	754	431	1470	300W	A, A+, B, D, E, F, G	41.1195	335.00	**402.00**

Wendover Straight Stainless Steel Multirail - Polished 1600mm Height

Width	Delta △T30 Watts	Delta △T30 BTU	Delta △T50 Watts	Delta △T50 BTU	Element Output	Element Type	Code	£ Ex VAT	£ Inc VAT
400mm	181	618	356	1214	300W	A, A+, B, D, E, F, G	41.1196	316.00	**379.20**
500mm	219	747	428	1460	300W	A, A+, B, D, E, F, G	41.1197	338.00	**405.60**
600mm	257	877	500	1705	300W	A, A+, B, D, E, F, G	41.1198	365.00	**438.00**

Wendover Straight Stainless Steel Multirail - Polished 1800mm Height

Width	Delta △T30 Watts	Delta △T30 BTU	Delta △T50 Watts	Delta △T50 BTU	Element Output	Element Type	Code	£ Ex VAT	£ Inc VAT
400mm	206	703	406	1385	300W	A, A+, B, D, E, F, G	41.1189	341.00	**409.20**
500mm	249	850	486	1658	300W	A, A+, B, D, E, F, G	41.0791	366.00	**439.20**
600mm	293	1000	567	1934	300W	A, A+, B, D, E, F, G	41.0792	396.00	**475.20**

Radiator Valves
Page 338-353

TECHNICAL INFORMATION

All measurements in Height by Width. Radiators that are electric only are restricted to the heat output of the elements. Element size can be increased to full capacity of rail if using element type B, D, E, F or G. For element types see pages 324-337. For matching valves see pages 338-353. For direct & indirect heating systems. Tappings are approx. 50mm less than the width of the rail and approx. 75-100mm off the wall. Price includes radiator and wall fixing sets, valves extra. Maximum working pressure: 4 bars.

800mm High

1000mm High

1200mm High

1400mm High

1600mm High

1800mm High

• NEW SIZES HERE •

Stainless Steel Range

WENDOVER STRAIGHT STAINLESS STEEL - BRUSHED

Pictured 41.0797 Brushed

Pictured 41.0795 Brushed

Rear fixing wall brackets

Introducing the Wendover Straight Multirail, now available in a sleek stainless steel version. Combining the practicality of a towel rail with the durability and modern elegance of stainless steel, it's the perfect addition to any stylish bathroom.

FEATURES

- Grade 304 Stainless Steel material
- 22mm diameter horizontal round tubes
- 40 x 30mm vertical profiles
- Brushed finished surface
- Tested to BS EN 442 standards
- Can be single or dual fuel, or all electric
- 5 Year manufacturer's warranty*

* With conditions

Technical Tables & Drawings
Page 374-375

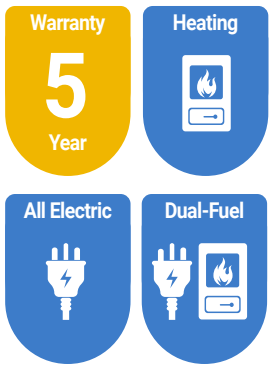

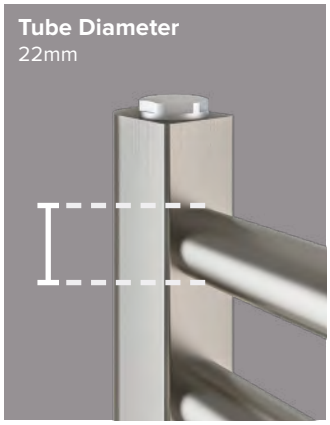

Stainless Steel Range

WENDOVER STRAIGHT STAINLESS STEEL - BRUSHED

Wendover Straight Stainless Steel Multirail - Brushed 800mm Height

Width	Delta △T30 Watts	Delta △T30 BTU	Delta △T50 Watts	Delta △T50 BTU	Element Output	Element Type	Code	£ Ex VAT	£ Inc VAT
400mm	97	331	182	621	150W	A, A+, B, D, E, F, G	41.1199	198.00	**237.60**
500mm	115	393	214	730	150W	A, A+, B, D, E, F, G	41.0793	209.00	**250.80**
600mm	133	454	247	843	150W	A, A+, B, D, E, F, G	41.0794	223.00	**267.60**

Wendover Straight Stainless Steel Multirail - Brushed 1000mm Height

Width	Delta △T30 Watts	Delta △T30 BTU	Delta △T50 Watts	Delta △T50 BTU	Element Output	Element Type	Code	£ Ex VAT	£ Inc VAT
400mm	118	403	224	764	150W	A, A+, B, D, E, F, G	41.1202	225.00	**270.00**
500mm	139	474	264	901	150W	A, A+, B, D, E, F, G	41.1203	240.00	**288.00**
600mm	161	550	305	1041	150W	A, A+, B, D, E, F, G	41.1204	255.00	**306.00**

Wendover Straight Stainless Steel Multirail - Brushed 1200mm Height

Width	Delta △T30 Watts	Delta △T30 BTU	Delta △T50 Watts	Delta △T50 BTU	Element Output	Element Type	Code	£ Ex VAT	£ Inc VAT
400mm	140	478	270	921	150W	A, A+, B, D, E, F, G	41.1200	265.00	**318.00**
500mm	167	570	322	1099	150W	A, A+, B, D, E, F, G	41.0795	284.00	**340.80**
600mm	193	659	374	1276	300W	A, A+, B, D, E, F, G	41.0796	305.00	**366.00**

Wendover Straight Stainless Steel Multirail - Brushed 1400mm Height

Width	Delta △T30 Watts	Delta △T30 BTU	Delta △T50 Watts	Delta △T50 BTU	Element Output	Element Type	Code	£ Ex VAT	£ Inc VAT
400mm	167	570	321	1095	300W	A, A+, B, D, E, F, G	41.1205	306.00	**367.20**
500mm	201	686	386	1317	300W	A, A+, B, D, E, F, G	41.1206	329.00	**394.80**
600mm	236	805	451	1538	300W	A, A+, B, D, E, F, G	41.1207	353.00	**423.60**

Wendover Straight Stainless Steel Multirail - Brushed 1600mm Height

Width	Delta △T30 Watts	Delta △T30 BTU	Delta △T50 Watts	Delta △T50 BTU	Element Output	Element Type	Code	£ Ex VAT	£ Inc VAT
400mm	193	659	372	1269	300W	A, A+, B, D, E, F, G	41.1208	334.00	**400.80**
500mm	234	798	447	1525	300W	A, A+, B, D, E, F, G	41.1209	360.00	**432.00**
600mm	275	938	523	1784	300W	A, A+, B, D, E, F, G	41.1210	386.00	**463.20**

Wendover Straight Stainless Steel Multirail - Brushed 1800mm Height

Width	Delta △T30 Watts	Delta △T30 BTU	Delta △T50 Watts	Delta △T50 BTU	Element Output	Element Type	Code	£ Ex VAT	£ Inc VAT
400mm	220	751	424	1446	300W	A, A+, B, D, E, F, G	41.1201	361.00	**433.20**
500mm	267	911	509	1736	300W	A, A+, B, D, E, F, G	41.0797	389.00	**466.80**
600mm	314	1071	594	2026	300W	A, A+, B, D, E, F, G	41.0798	419.00	**502.80**

Radiator Valves
Page 338-353

TECHNICAL INFORMATION

All measurements in Height by Width. Radiators that are electric only are restricted to the heat output of the elements. Element size can be increased to full capacity of rail if using element type B, D, E, F or G. For element types see pages 324-337. For matching valves see pages 338-353. For direct & indirect heating systems. Tappings are approx. 50mm less than the width of the rail and approx. 75-100mm off the wall. Price includes radiator and wall fixing sets, valves extra. Maximum working pressure: 4 bars.

800mm High

1000mm High

1200mm High

1400mm High

1600mm High

1800mm High

Stainless Steel Range

VIOLLA II - POLISHED

Violla II Stainless Steel Towel Rail - Polished 790mm Height

Width	Delta △T30 Watts*	Delta △T30 BTU*	Delta △T50 Watts*	Delta △T50 BTU*	Element Output	Element Type	Code	£ Ex VAT	£ Inc VAT
500mm	90	307	172	587	150W	A, A+, B, D, E, F, G	41.0880	212.00	**254.40**
600mm	104	355	200	682	150W	A, A+, B, D, E, F, G	41.0881	226.00	**271.20**

Violla II Stainless Steel Towel Rail - Polished 1210mm Height

Width	Delta △T30 Watts*	Delta △T30 BTU*	Delta △T50 Watts*	Delta △T50 BTU*	Element Output	Element Type	Code	£ Ex VAT	£ Inc VAT
500mm	145	495	277	945	150W	A, A+, B, D, E, F, G	41.0882	295.00	**354.00**
600mm	169	577	321	1095	300W	A, A+, B, D, E, F, G	41.0883	318.00	**381.60**

Violla II Stainless Steel Towel Rail - Polished 1630mm Height

Width	Delta △T30 Watts*	Delta △T30 BTU*	Delta △T50 Watts*	Delta △T50 BTU*	Element Output	Element Type	Code	£ Ex VAT	£ Inc VAT
500mm	200	682	376	1283	300W	A, A+, B, D, E, F, G	41.0884	363.00	**435.60**
600mm	232	792	436	1487	300W	A, A+, B, D, E, F, G	41.0885	392.00	**470.40**

* Further heat output information available on eastbrooktrade.com **E&OA**

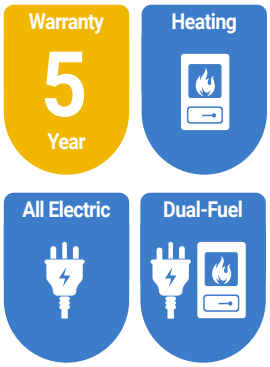

Building on the simplicity of the classic ladder rail, Violla II combines sleek minimalism with enhanced functionality. Thoughtfully spaced rails ensure effortless towel placement on every bar. Designed for modern living, blending style and practicality seamlessly.

FEATURES

- Grade 304 Stainless Steel material
- 19mm diameter horizontal round tubes
- 32mm diameter vertical profiles
- Mirror polished surface (Chrome effect)
- Tested to BS EN 442 standards
- Can be single or dual fuel, or all electric
- 5 Year manufacturer's warranty*

* With conditions

Technical Tables & Drawings
Page 376-377

TECHNICAL INFORMATION

All measurements in Height by Width. Radiators that are electric only are restricted to the heat output of the elements. Element size can be increased to full capacity of rail if using element type B, D, E, F or G. For element types see pages 324-337. For matching valves see pages 338-353. For direct & indirect heating systems. Tappings are approx. 32mm less than the width of the rail and approx. 76-101mm off the wall. Price includes radiator and wall fixing sets, valves extra. Maximum working pressure: 4 bars.

Stainless Steel Range

VIOLLA II - BRUSHED

Pictured 41.0886 Brushed

Rear bleed valve

Pictured 41.0889 Brushed

Rear fixing wall brackets

Building on the simplicity of the classic ladder rail, Viollа II combines sleek minimalism with enhanced functionality. Thoughtfully spaced rails ensure effortless towel placement on every bar. Designed for modern living, blending style and practicality seamlessly.

FEATURES

- Grade 304 Stainless Steel material
- 19mm diameter horizontal round tubes
- 32mm diameter vertical profiles
- Brushed surface
- Tested to BS EN 442 standards
- Can be single or dual fuel, or all electric
- 5 Year manufacturer's warranty*

* With conditions

Technical Tables & Drawings
Page 376-377

TECHNICAL INFORMATION

All measurements in Height by Width. Radiators that are electric only are restricted to the heat output of the elements. Element size can be increased to full capacity of rail if using element type B, D, E, F or G. For element types see pages 324-337. For matching valves see pages 338-353. For direct & indirect heating systems. Tappings are approx. 32mm less than the width of the rail and approx. 76-101mm off the wall. Price includes radiator and wall fixing sets, valves extra. Maximum working pressure: 4 bars.

Violla II Stainless Steel Towel Rail - Brushed 790mm Height

Width	Delta △T30 Watts*	Delta △T30 BTU*	Delta △T50 Watts*	Delta △T50 BTU*	Element Output	Element Type	Code	£ Ex VAT	£ Inc VAT
500mm	95	324	181	618	150W	A, A+, B, D, E, F, G	41.0886	227.00	**272.40**
600mm	110	376	210	717	150W	A, A+, B, D, E, F, G	41.0887	241.00	**289.20**

Violla II Stainless Steel Towel Rail - Brushed 1210mm Height

Width	Delta △T30 Watts*	Delta △T30 BTU*	Delta △T50 Watts*	Delta △T50 BTU*	Element Output	Element Type	Code	£ Ex VAT	£ Inc VAT
500mm	153	522	291	993	150W	A, A+, B, D, E, F, G	41.0888	317.00	**380.40**
600mm	178	607	338	1153	300W	A, A+, B, D, E, F, G	41.0889	339.00	**406.80**

Violla II Stainless Steel Towel Rail - Brushed 1630mm Height

Width	Delta △T30 Watts*	Delta △T30 BTU*	Delta △T50 Watts*	Delta △T50 BTU*	Element Output	Element Type	Code	£ Ex VAT	£ Inc VAT
500mm	210	717	395	1347	300W	A, A+, B, D, E, F, G	41.0890	392.00	**470.40**
600mm	244	833	458	1562	300W	A, A+, B, D, E, F, G	41.0891	421.00	**505.20**

* Further heat output information available on eastbrooktrade.com **E&OA**

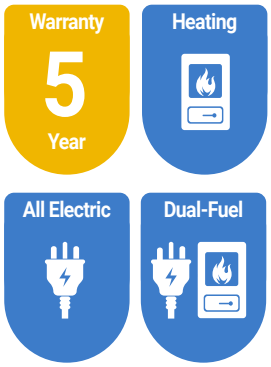

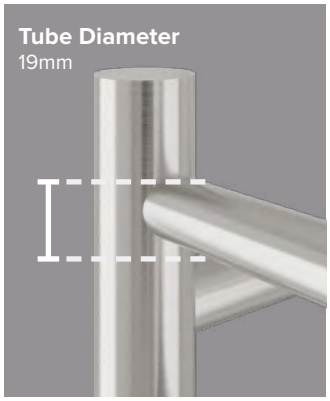

Stainless Steel Range

RIZANO

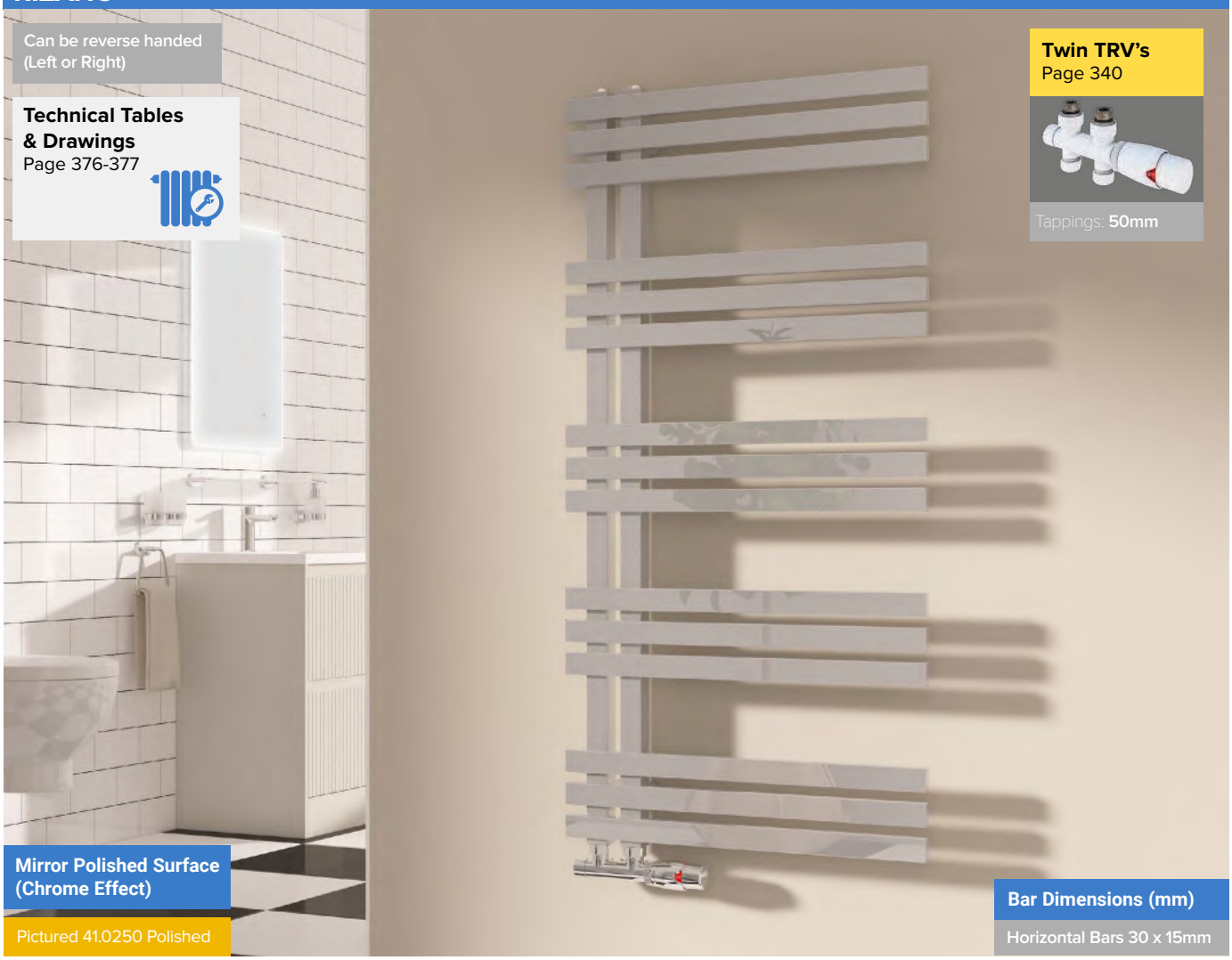

This sophisticated, ultra modern radiator adds a hugely useful feature with its single sided towel bars.

Rizano Stainless Steel Towel Rail - Polished 1000mm Height

Width	Delta △T30 Watts	Delta △T30 BTU	Delta △T50 Watts	Delta △T50 BTU	Element Output	Element Type	Code	£ Ex VAT	£ Inc VAT
500mm	133	454	262	894	300W	A, A+, B, D, E	41.0250	640.00	**768.00**
600mm	157	536	307	1047	300W	A, A+, B, D, E	41.0251	880.00	**1056.00**

FEATURES

- Grade 304 Stainless Steel material
- Mirror polished surface (Chrome effect)
- Can be single, dual fuel or all electric
- Tested to BS EN 442 standards
- Tappings at the top and bottom. Can be reverse handed (left or right)
- Twin valves can be used with this towel rail
- 5 Year Manufacturer's Warranty*

* With conditions

TECHNICAL INFORMATION

All measurements in Height by Width. Radiators that are electric only are restricted to the heat output of the elements. Element size can be increased to full capacity of rail if using element type B, D or E. For element types see pages 324-337. For matching valves see pages 338-353. For direct & indirect heating systems. Tappings are approx. 50mm and approx. 65mm off the wall. Price includes radiator and wall fixing sets, valves extra. Maximum working pressure: 4 bars.

Warranty 5 Year | Heating | All Electric | Dual-Fuel

Stainless Steel Range

VELINO - POLISHED & BRUSHED

Elevate your bathroom with the Velino, crafted from premium stainless steel for durability. Designed with built-in shelves for added convenience, it offers ample space to dry multiple towels at once while enhancing your space with effortless elegance. Experience the perfect blend of style and functionality with Velino.

FEATURES

- Grade 304 Stainless Steel material
- 19mm diameter horizontal round tubes
- 35 x 35mm vertical profiles
- Mirror polished surface (Chrome effect)
- Tested to BS EN 442 standards
- Can be single or dual fuel, or all electric
- 5 Year manufacturer's warranty*

* With conditions

Technical Tables & Drawings
Page 376-377

Velino Stainless Steel Towel Rail - Polished 800mm Height

Width	Delta △T30 Watts*	Delta △T30 BTU*	Delta △T50 Watts*	Delta △T50 BTU*	Element Output	Element Type	Code	£ Ex VAT	£ Inc VAT
500mm	125	427	235	802	150W	A, A+, B, D, E, F, G	41.1111	340.00	**408.00**
600mm	143	488	268	914	150W	A, A+, B, D, E, F, G	41.1112	374.00	**448.80**

Velino Stainless Steel Towel Rail - Brushed 800mm Height

Width	Delta △T30 Watts*	Delta △T30 BTU*	Delta △T50 Watts*	Delta △T50 BTU*	Element Output	Element Type	Code	£ Ex VAT	£ Inc VAT
500mm	132	451	247	843	150W	A, A+, B, D, E, F, G	41.1115	356.00	**427.20**
600mm	151	515	282	962	150W	A, A+, B, D, E, F, G	41.1116	390.00	**468.00**

Velino Stainless Steel Towel Rail - Polished 1200mm Height

Width	Delta △T30 Watts*	Delta △T30 BTU*	Delta △T50 Watts*	Delta △T50 BTU*	Element Output	Element Type	Code	£ Ex VAT	£ Inc VAT
500mm	167	570	317	1081	150W	A, A+, B, D, E, F, G	41.1113	435.00	**522.00**
600mm	189	645	358	1221	300W	A, A+, B, D, E, F, G	41.1114	470.00	**564.00**

* Further heat output information available on eastbrooktrade.com **E&OA**

Velino Stainless Steel Towel Rail - Brushed 1200mm Height

Width	Delta △T30 Watts*	Delta △T30 BTU*	Delta △T50 Watts*	Delta △T50 BTU*	Element Output	Element Type	Code	£ Ex VAT	£ Inc VAT
500mm	176	601	333	1136	150W	A, A+, B, D, E, F, G	41.1117	459.00	**550.80**
600mm	199	679	376	1283	300W	A, A+, B, D, E, F, G	41.1118	494.00	**592.80**

* Further heat output information available on eastbrooktrade.com **E&OA**

Warranty 5 Year | Heating | All Electric | Dual-Fuel

TECHNICAL INFORMATION

All measurements in Height by Width. Radiators that are electric only are restricted to the heat output of the elements. Element size can be increased to full capacity of rail if using element type B, D, E, F or G. For element types see pages 324-337. For matching valves see pages 338-353. For direct & indirect heating systems. Tappings are approx. 35mm less than the width of the rail and approx. 97.5mm off the wall. Projection from the wall is 290mm. Price includes radiator and wall fixing sets, valves extra. Maximum working pressure: 4 bars

Designer Range

Our aim is to offer a statement piece radiator or towel rail that allows maximum space to keep towels warm. In the designer range you can find a huge variety of towel rail styles and radiators using minimalistic, clean designs.

Contents

Warrington Type 10, Available in 5 colours	92-95
Warrington Type 20, Available in 3 colours	96-99
Leonardo, Chrome & Brushed Brass	100-101
Staverton Tube on Tube Straight, Available in 3 colours	102
Staverton Tube on Tube Curved, Chrome	103
Defford, Available in 5 colours	104-105
Staverton, Available in 3 colours	106-107
Santero, Available in 4 colours	108-109
Hurley, Available in 6 colours	110-113
Helmsley, Available in 4 colours	114-115
Platani, Available in 5 colours	116-117
Reinbach, Available in 5 colours	118-119
Marlow, Available in 5 colours	120-121
Marlow E-Style, Available in 5 colours	122-123
Conwy, Available in 4 colours	124
Portchester, Available in 4 colours	125
Murano Vertical, Available in 4 colours	126
Murano Horizontal, Available in 4 colours	127
Ryton, Available in 3 colours	128
Kenilworth, Available in 3 colours	129
Loxley, Available in 3 colours	130
Eshton, Available in 3 colours	131
Rubano Vertical & Horizontal, Gloss White & Matt Anthracite	132-133
Rowsham Vertical & Horizontal, Matt White & Matt Anthracite	134-136
Rowsham Towel Rail, Matt White & Matt Anthracite	137
Wingrave Flat Panel, Available in 3 colours	138-139
Tunstall Vertical, Available in 4 colours	140-141
Tunstall Horizontal, Available in 3 colours	142
Tunstall Towel Rail, Available in 4 colours	143
Tunstall Double Vertical, Available in 3 colours	144-145
Tunstall Double Horizontal, Available in 3 colours	146-147
Tunstall Double Towel Rail, Available in 3 colours	148
Tunstall Mirror, Available in 3 colours	149
Tunstall Double Mirror, Available in 3 colours	149
Deddington Vertical, Available in 5 colours	150-151
Deddington Horizontal, Available in 5	152-153
Deddington Towel Rail, Available in 5 colours	154-155
Addington II Type 10, Available in 4 colours	156-163
Addington Type10 Towel Hangers - **NEW SIZES**	164-165
Addington II Type 20, Available in 3 colours	166-171
Addington II Type 10 Towel Rail, Available in 4 colours	172-174
Addington II Type 20 Towel Rail, Available in 3 colours	175

Designer Range

WARRINGTON TYPE 10 - HORIZONTAL

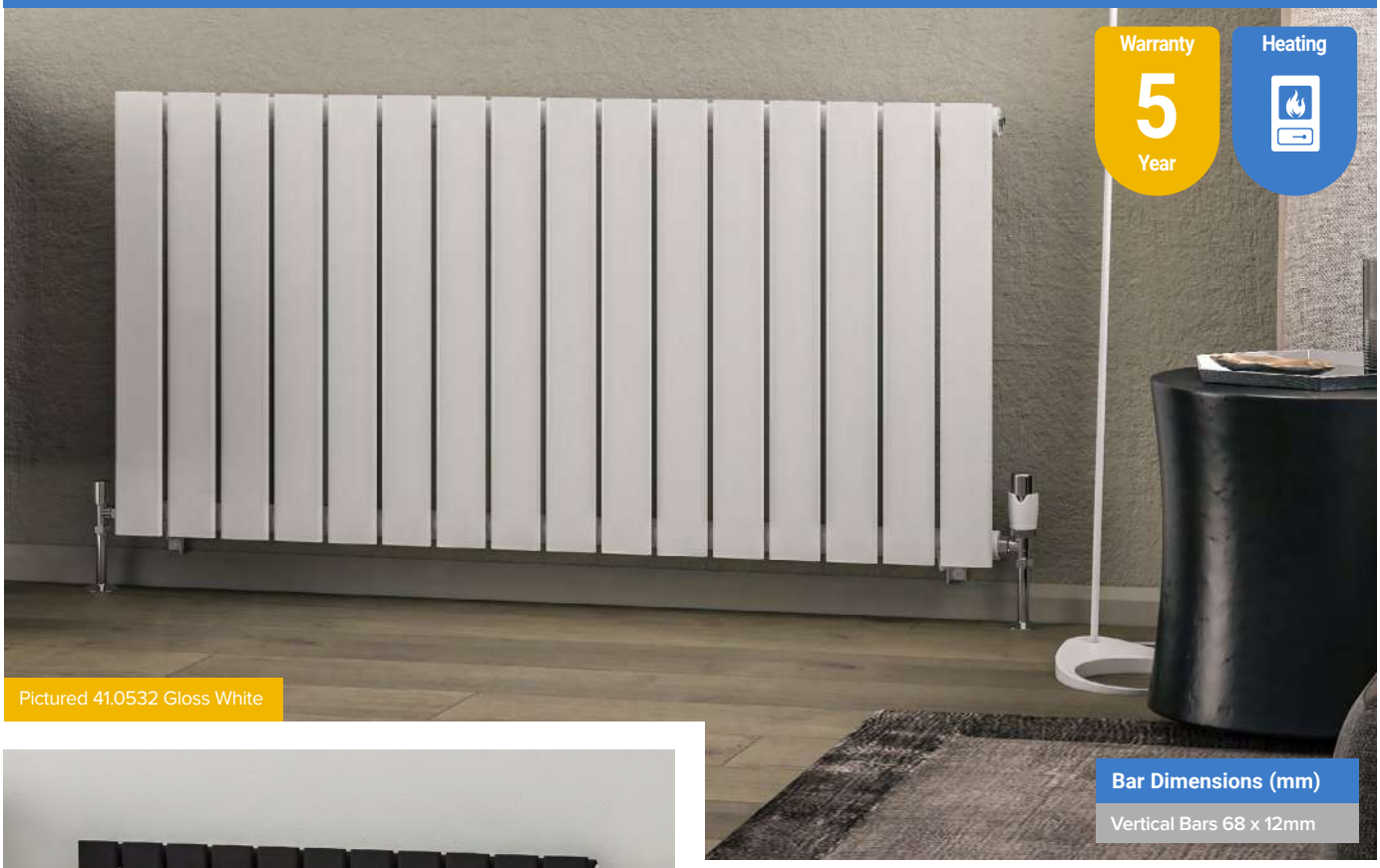

Pictured 41.0532 Gloss White

Bar Dimensions (mm)

Vertical Bars 68 x 12mm

Pictured 41.0528 Matt Black

Warrington Designer Radiator will be the centre of attention in any room with its perfectly crafted elliptical front panels. Completing your radiator with the extra towel hangers has never been easier. Single panel Warrington Radiator is available in vertical & horizontal sizes and 4 colours in total.

FEATURES

- 68x12mm vertical bars
- Tested to BS EN 442 standards
- Single profile construction
- 4 colours available from stock
- Not suitable for elements
- Comes with same colour blanking plug & bleed valve (brushed brass finish only)
- 5 Year Manufacturer's Warranty*

* With conditions

Technical Tables & Drawings
Page 376-377

TECHNICAL INFORMATION

All measurements in Height by Width. Not suitable for elements. For matching valves see pages 338-353. Comes with pre-fitted flow diverter, fitted in the middle of the bottom header. For indirect heating systems only. Tappings are the width of the rail and approx. 51mm off the wall. Projection from wall 84mm.

Gloss White

Warrington Type 10 Horizontal Radiators - Gloss White 600mm Height

Width	Delta △T30		Delta △T50		Code	£ Ex VAT	£ Inc VAT
	Watts	BTU	Watts	BTU			
452mm	169	577	321	1095	41.0520	123.00	**147.60**
604mm	225	768	427	1457	41.0523	152.00	**182.40**
832mm	310	1058	588	2006	41.0526	195.00	**234.00**
1060mm	394	1344	748	2551	41.0529	237.00	**284.40**
1212mm	450	1535	854	2913	41.0532	265.00	**318.00**
1440mm	535	1825	1015	3462	41.0841	306.00	**367.20**
1668mm	619	2111	1175	4007	41.0844	349.00	**418.80**

Matt Anthracite

Warrington Type 10 Horizontal Radiators - Matt Anthracite 600mm Height

Width	Delta △T30		Delta △T50		Code	£ Ex VAT	£ Inc VAT
	Watts	BTU	Watts	BTU			
452mm	169	577	321	1095	41.0521	126.00	**151.20**
604mm	225	768	427	1457	41.0524	156.00	**187.20**
832mm	310	1058	588	2006	41.0527	200.00	**240.00**
1060mm	394	1344	748	2551	41.0530	243.00	**291.60**
1212mm	450	1535	854	2913	41.0533	272.00	**326.40**
1440mm	535	1825	1015	3462	41.0842	314.00	**376.80**
1668mm	619	2111	1175	4007	41.0845	359.00	**430.80**

Matt Black

Warrington Type 10 Horizontal Radiators - Matt Black 600mm Height

Width	Delta △T30		Delta △T50		Code	£ Ex VAT	£ Inc VAT
	Watts	BTU	Watts	BTU			
452mm	169	577	321	1095	41.0522	126.00	**151.20**
604mm	225	768	427	1457	41.0525	156.00	**187.20**
832mm	310	1058	588	2006	41.0528	200.00	**240.00**
1060mm	394	1344	748	2551	41.0531	243.00	**291.60**
1212mm	450	1535	854	2913	41.0534	272.00	**326.40**
1440mm	535	1825	1015	3462	41.0843	314.00	**376.80**
1668mm	619	2111	1175	4007	41.0846	359.00	**430.80**

Designer Range

WARRINGTON TYPE 10 - VERTICAL

Warrington Designer Radiator will be the centre of attention in any room with its perfectly crafted elliptical front panels. Completing your radiator with the extra towel hangers has never been easier. Single panel Warrington Radiator is available in vertical & horizontal sizes and 5 colours in total, including the brand new stunning chrome finish.

FEATURES

- 68x12mm vertical bars
- Tested to BS EN 442 standards
- Single profile construction
- Not suitable for elements
- Comes with same colour blanking plug & bleed valve (brushed brass finish only)
- 5 Year Manufacturer's Warranty*

* With conditions

Technical Tables & Drawings
Page 378-379

Gloss White

Warrington Type 10 Vertical Radiators - Gloss White 1500mm Height

Width	Delta △T30		Delta △T50		Code	£ Ex VAT	£ Inc VAT
	Watts	BTU	Watts	BTU			
300mm	258	880	490	1671	41.1119	155.00	**186.00**
376mm	322	1099	612	2087	41.1120	186.00	**223.20**
452mm	387	1320	735	2507	41.1121	216.00	**259.20**
528mm	451	1538	857	2923	41.1122	247.00	**296.40**
604mm	516	1760	980	3342	41.1123	277.00	**332.40**
680mm	580	1978	1102	3758	41.1124	308.00	**369.60**

Matt Anthracite

Warrington Type 10 Vertical Radiators - Matt Anthracite 1500mm Height

Width	Delta △T30		Delta △T50		Code	£ Ex VAT	£ Inc VAT
	Watts	BTU	Watts	BTU			
300mm	258	880	490	1671	41.1125	159.00	**190.80**
376mm	322	1099	612	2087	41.1126	190.00	**228.00**
452mm	387	1320	735	2507	41.1127	221.00	**265.20**
528mm	451	1538	857	2923	41.1128	253.00	**303.60**
604mm	516	1760	980	3342	41.1129	284.00	**340.80**
680mm	580	1978	1102	3758	41.1130	315.00	**378.00**

Matt Black

Warrington Type 10 Vertical Radiators - Matt Black 1500mm Height

Width	Delta △T30		Delta △T50		Code	£ Ex VAT	£ Inc VAT
	Watts	BTU	Watts	BTU			
300mm	258	880	490	1671	41.1131	159.00	**190.80**
376mm	322	1099	612	2087	41.1132	190.00	**228.00**
452mm	387	1320	735	2507	41.1133	221.00	**265.20**
528mm	451	1538	857	2923	41.1134	253.00	**303.60**
604mm	516	1760	980	3342	41.1135	284.00	**340.80**
680mm	580	1978	1102	3758	41.1136	315.00	**378.00**

Chrome

Warrington Type 10 Vertical Radiators - Chrome 1500mm Height

Width	Delta △T30		Delta △T50		Code	£ Ex VAT	£ Inc VAT
	Watts	BTU	Watts	BTU			
300mm	151	515	293	1000	41.1137	244.00	**292.80**
376mm	188	642	366	1249	41.1138	295.00	**354.00**
452mm	226	771	439	1497	41.1139	346.00	**415.20**
528mm	263	897	512	1746	41.1140	397.00	**476.40**
604mm	301	1027	585	1995	41.1141	449.00	**538.80**

Brushed Brass

Warrington Type 10 Vertical Radiators - Brushed Brass 1500mm Height

Width	Delta △T30		Delta △T50		Code	£ Ex VAT	£ Inc VAT
	Watts*	BTU*	Watts*	BTU*			
300mm	151	515	293	1000	41.1142	363.00	**435.60**
376mm	188	642	366	1249	41.1143	414.00	**496.80**
452mm	226	771	439	1497	41.1144	465.00	**558.00**
528mm	263	897	512	1746	41.1145	516.00	**619.20**
604mm	301	1027	585	1995	41.1146	567.00	**680.40**

* Further heat output information available on eastbrooktrade.com **E&OA**

Pictured 41.1134 Matt Black

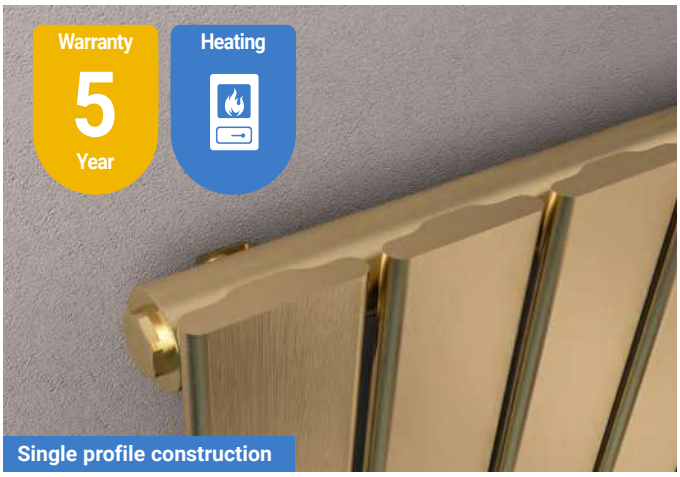

Single profile construction

TECHNICAL INFORMATION

All measurements in Height by Width. Not suitable for elements. For matching valves see pages 338-353. Comes with pre-fitted flow diverter, fitted in the middle of the bottom header. For indirect heating systems only. Tappings are the width of the rail and approx. 51mm off the wall. Projection from wall 84mm.

Designer Range

WARRINGTON TYPE 10 - VERTICAL

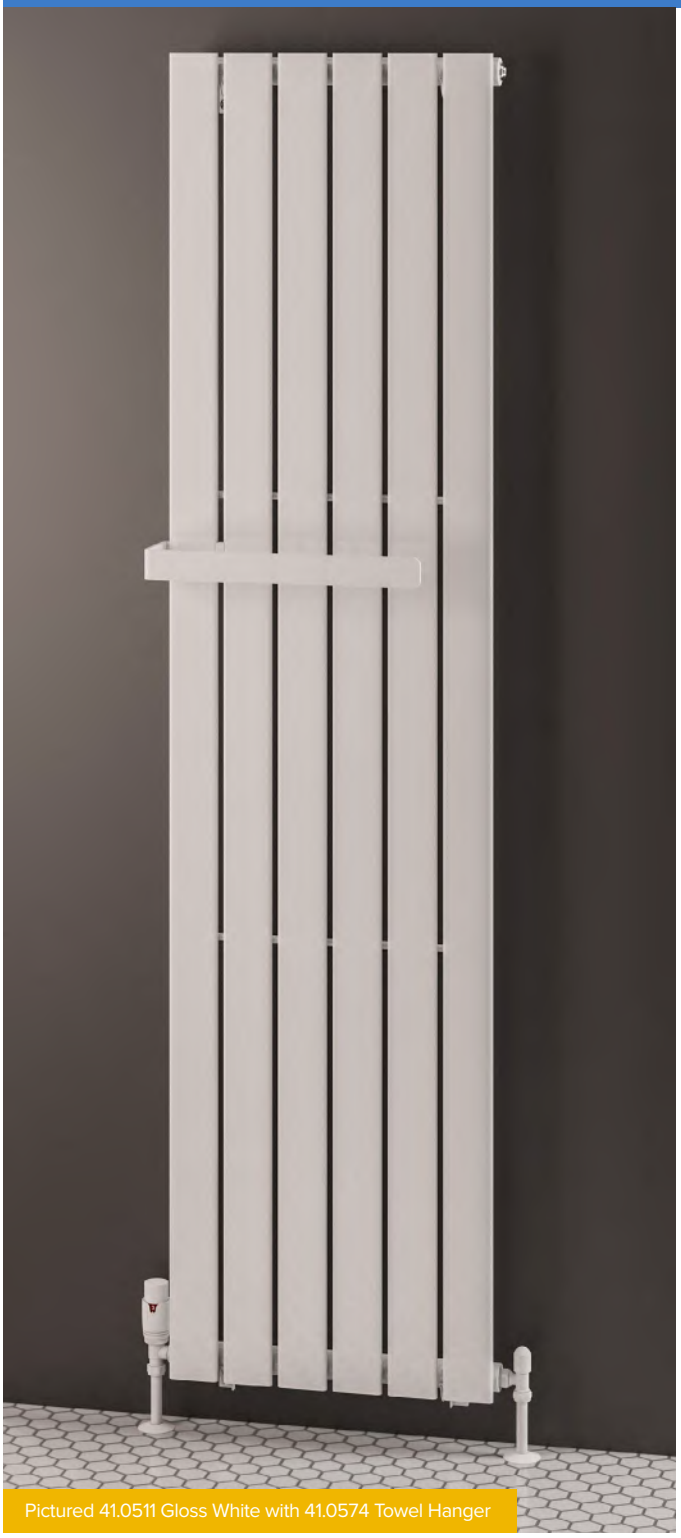

Pictured 41.0511 Gloss White with 41.0574 Towel Hanger

Warranty 5 Year

Heating

Bar Dimensions (mm)

Vertical Bars 68 x 12mm

Pictured 41.1150 Chrome with 41.0577 Towel Hanger

Warrington Designer Radiator will be the centre of attention in any room with its perfectly crafted elliptical front panels. Completing your radiator with the extra towel hangers has never been easier. Single panel Warrington Radiator is available in vertical & horizontal sizes and 5 colours in total.

FEATURES

- 68x12mm vertical bars
- Tested to BS EN 442 standards
- Single profile construction
- 5 colours available from stock
- Not suitable for elements
- Comes with same colour blanking plug & bleed valve (brushed brass finish only)
- 5 Year Manufacturer's Warranty*

* With conditions

Technical Tables & Drawings

Page 378-379

Designer Range

WARRINGTON TYPE 10 - VERTICAL

Gloss White

Warrington Type 10 Vertical Radiators - Gloss White 1800mm Height

Width	Delta △T30		Delta △T50		Code	£ Ex VAT	£ Inc VAT
	Watts	BTU	Watts	BTU			
300mm	322	1099	616	2101	41.0505	172.00	**206.40**
376mm	403	1375	769	2623	41.0508	205.00	**246.00**
452mm	483	1648	923	3148	41.0511	239.00	**286.80**
528mm	564	1924	1077	3673	41.0514	271.00	**325.20**
604mm	644	2197	1231	4198	41.0517	305.00	**366.00**
680mm	725	2473	1385	4723	41.0838	341.00	**409.20**

Matt Anthracite

Warrington Type 10 Vertical Radiators - Matt Anthracite 1800mm Height

Width	Delta △T30		Delta △T50		Code	£ Ex VAT	£ Inc VAT
	Watts	BTU	Watts	BTU			
300mm	322	1099	616	2101	41.0506	177.00	**212.40**
376mm	403	1375	769	2623	41.0509	212.00	**254.40**
452mm	483	1648	923	3148	41.0512	245.00	**294.00**
528mm	564	1924	1077	3673	41.0515	280.00	**336.00**
604mm	644	2197	1231	4198	41.0518	314.00	**376.80**
680mm	725	2473	1385	4723	41.0839	350.00	**420.00**

Matt Black

Warrington Type 10 Vertical Radiators - Matt Black 1800mm Height

Width	Delta △T30		Delta △T50		Code	£ Ex VAT	£ Inc VAT
	Watts	BTU	Watts	BTU			
300mm	322	1099	616	2101	41.0507	177.00	**212.40**
376mm	403	1375	769	2623	41.0510	212.00	**254.40**
452mm	483	1648	923	3148	41.0513	245.00	**294.00**
528mm	564	1924	1077	3673	41.0516	280.00	**336.00**
604mm	644	2197	1231	4198	41.0519	314.00	**376.80**
680mm	725	2473	1385	4723	41.0840	350.00	**420.00**

Chrome

Warrington Type 10 Vertical Radiators - Chrome 1800mm Height

Width	Delta △T30		Delta △T50		Code	£ Ex VAT	£ Inc VAT
	Watts*	BTU*	Watts*	BTU*			
300mm	192	655	383	1307	41.1147	279.00	**334.80**
376mm	240	819	479	1634	41.1148	339.00	**406.80**
452mm	288	983	575	1961	41.1149	397.00	**476.40**
528mm	336	1146	670	2285	41.1150	457.00	**548.40**
604mm	384	1310	766	2613	41.1151	516.00	**619.20**

Brushed Brass

Warrington Type 10 Vertical Radiators - Brushed Brass 1800mm Height

Width	Delta △T30		Delta △T50		Code	£ Ex VAT	£ Inc VAT
	Watts*	BTU*	Watts*	BTU*			
300mm	192	655	383	1307	41.0779	438.00	**525.60**
376mm	240	819	479	1634	41.0780	491.00	**589.20**
452mm	288	983	575	1961	41.0781	543.00	**651.60**
528mm	336	1146	670	2285	41.0782	596.00	**715.20**
604mm	384	1310	766	2613	41.0783	648.00	**777.60**

* Further heat output information available on eastbrooktrade.com **E&OA**

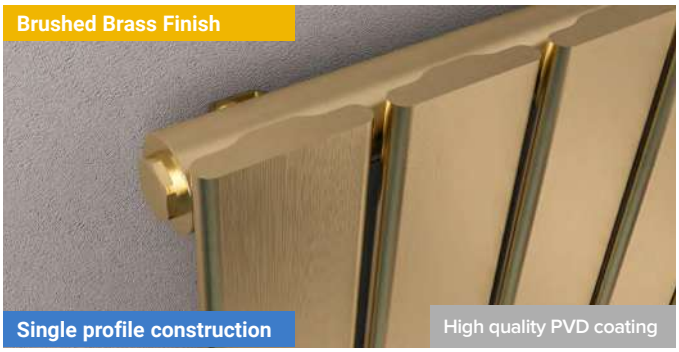

WARRINGTON TOWEL HANGERS TYPE10 & TYPE20

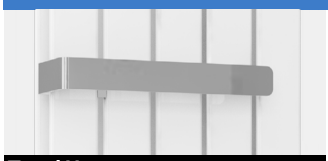

Towel Hanger - Mirror Polished Premium

Size	Code	£ Ex VAT	£ Inc VAT
239mm	41.0565	53.00	**63.60**
300mm	41.0569	57.00	**68.40**
380mm	41.0573	62.00	**74.40**
500mm	41.0577	71.00	**85.20**

Towel Hanger - Gloss White

Size	Code	£ Ex VAT	£ Inc VAT
239mm	41.0566	50.00	**60.00**
300mm	41.0570	53.00	**63.60**
380mm	41.0574	58.00	**69.60**
500mm	41.0578	65.00	**78.00**

Towel Hanger - Matt Anthracite

Size	Code	£ Ex VAT	£ Inc VAT
239mm	41.0567	50.00	**60.00**
300mm	41.0571	53.00	**63.60**
380mm	41.0575	58.00	**69.60**
500mm	41.0579	65.00	**78.00**

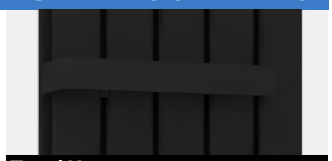

Towel Hanger - Matt Black

Size	Code	£ Ex VAT	£ Inc VAT
239mm	41.0568	50.00	**60.00**
300mm	41.0572	53.00	**63.60**
380mm	41.0576	58.00	**69.60**
500mm	41.0580	65.00	**78.00**

Towel Hanger - Brushed Brass Premium

Size	Code	£ Ex VAT	£ Inc VAT
239mm	41.0800	67.00	**80.40**
300mm	41.0801	72.00	**86.40**
380mm	41.0802	78.00	**93.60**
500mm	41.0803	89.00	**106.80**

Bleed Valve & Blanking Plug Set - Brushed Brass

Code	£ Ex VAT	£ Inc VAT
41.0732	11.00	**13.20**

TECHNICAL INFORMATION

Material: **Steel (Premium: Stainless Steel - Grade 304)**

Warrington radiators do not come with towel hanger locations. Towel hangers can be fitted on any desired height, left or right handed and with the quantity chosen. Warrington Towel Hangers can be fitted on vertical & horizontal sizes.

Must be fitted before installation. Warrington Towel Hangers are only compatible with Warrington Type 10 & Type 20 radiators.

Designer Range

WARRINGTON TYPE 20 - HORIZONTAL

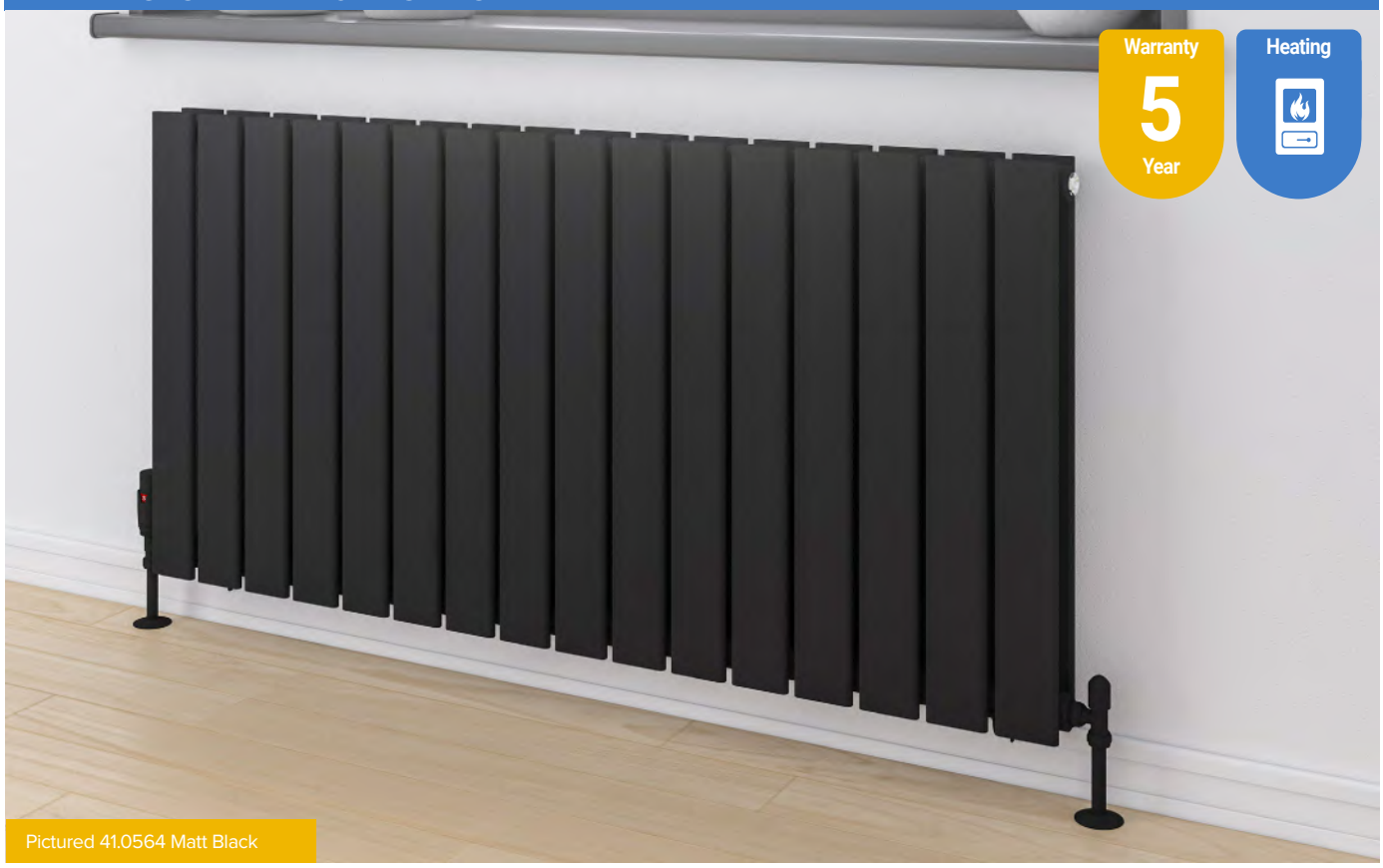

Pictured 41.0564 Matt Black

Pictured 41.0553 Gloss White

Warrington Designer Radiator will be the centre of attention in any room with its perfectly crafted elliptical front panels. Completing your radiator with the extra towel hangers has never been easier. Double panel Warrington Radiator is available in vertical & horizontal sizes and 3 colours.

FEATURES

- 68x12mm vertical bars
- Tested to BS EN 442 standards
- Double profile construction
- 3 colours available from stock
- Not suitable for elements
- 5 Year Manufacturer's Warranty*

* With conditions

Technical Tables & Drawings
Page 378-379

TECHNICAL INFORMATION

All measurements in Height by Width. Not suitable for elements. For matching valves see pages 338-353. Comes with pre-fitted flow diverter, fitted in the middle of the bottom header. For indirect heating systems only. Tappings are the width of the rail and approx. 51mm off the wall. Projection from wall 84mm.

Gloss White

Warrington Type 20 Horizontal Radiators - Gloss White 600mm Height

Width	Delta △T30		Delta △T50		Code	£ Ex VAT	£ Inc VAT
	Watts	BTU	Watts	BTU			
456mm	268	914	510	1740	41.0550	182.00	**218.40**
608mm	358	1221	680	2319	41.0553	230.00	**276.00**
836mm	492	1678	935	3189	41.0556	303.00	**363.60**
1064mm	626	2135	1190	4058	41.0559	374.00	**448.80**
1216mm	715	2439	1360	4638	41.0562	423.00	**507.60**
1444mm	849	2896	1615	5508	41.0850	493.00	**591.60**
1672mm	983	3353	1870	6377	41.0853	565.00	**678.00**

Matt Anthracite

Warrington Type 20 Horizontal Radiators - Matt Anthracite 600mm Height

Width	Delta △T30		Delta △T50		Code	£ Ex VAT	£ Inc VAT
	Watts	BTU	Watts	BTU			
456mm	268	914	510	1740	41.0551	187.00	**224.40**
608mm	358	1221	680	2319	41.0554	237.00	**284.40**
836mm	492	1678	935	3189	41.0557	311.00	**373.20**
1064mm	626	2135	1190	4058	41.0560	385.00	**462.00**
1216mm	715	2439	1360	4638	41.0563	434.00	**520.80**
1444mm	849	2896	1615	5508	41.0851	507.00	**608.40**
1672mm	983	3353	1870	6377	41.0854	581.00	**697.20**

Matt Black

Warrington Type 20 Horizontal Radiators - Matt Black 600mm Height

Width	Delta △T30		Delta △T50		Code	£ Ex VAT	£ Inc VAT
	Watts	BTU	Watts	BTU			
456mm	268	914	510	1740	41.0552	187.00	**224.40**
608mm	358	1221	680	2319	41.0555	237.00	**284.40**
836mm	492	1678	935	3189	41.0558	311.00	**373.20**
1064mm	626	2135	1190	4058	41.0561	385.00	**462.00**
1216mm	715	2439	1360	4638	41.0564	434.00	**520.80**
1444mm	849	2896	1615	5508	41.0852	507.00	**608.40**
1672mm	983	3353	1870	6377	41.0855	581.00	**697.20**

Designer Range

WARRINGTON TYPE 20 - VERTICAL

Pictured 41.1154 Gloss White

Pictured 41.1167 Matt Black with 41.0803 Towel Hanger

Double profile construction

Gloss White

Warrington Type 20 Vertical Radiators - Gloss White 1500mm Height

Width	Delta △T30		Delta △T50		Code	£ Ex VAT	£ Inc VAT
	Watts	BTU	Watts	BTU			
304mm	372	1269	721	2459	41.1152	242.00	**290.40**
380mm	466	1590	902	3076	41.1153	294.00	**352.80**
456mm	559	1907	1082	3690	41.1154	346.00	**415.20**
532mm	652	2224	1262	4304	41.1155	397.00	**476.40**
608mm	745	2541	1443	4921	41.1156	450.00	**540.00**
684mm	838	2858	1623	5535	41.1157	502.00	**602.40**

Matt Anthracite

Warrington Type 20 Vertical Radiators - Matt Anthracite 1500mm Height

Width	Delta △T30		Delta △T50		Code	£ Ex VAT	£ Inc VAT
	Watts	BTU	Watts	BTU			
304mm	372	1269	721	2459	41.1158	249.00	**298.80**
380mm	466	1590	902	3076	41.1159	301.00	**361.20**
456mm	559	1907	1082	3690	41.1160	355.00	**426.00**
532mm	652	2224	1262	4304	41.1161	408.00	**489.60**
608mm	745	2541	1443	4921	41.1162	462.00	**554.40**
684mm	838	2858	1623	5535	41.1163	515.00	**618.00**

Matt Black

Warrington Type 20 Vertical Radiators - Matt Black 1500mm Height

Width	Delta △T30		Delta △T50		Code	£ Ex VAT	£ Inc VAT
	Watts	BTU	Watts	BTU			
304mm	372	1269	721	2459	41.1164	249.00	**298.80**
380mm	466	1590	902	3076	41.1165	301.00	**361.20**
456mm	559	1907	1082	3690	41.1166	355.00	**426.00**
532mm	652	2224	1262	4304	41.1167	408.00	**489.60**
608mm	745	2541	1443	4921	41.1168	462.00	**554.40**
684mm	838	2858	1623	5535	41.1169	515.00	**618.00**

Warrington Designer Radiator will be the centre of attention in any room with its perfectly crafted elliptical front panels. Completing your radiator with the extra towel hangers has never been easier. Single panel Warrington Radiator is available in vertical & horizontal sizes and 4 colours in total.

FEATURES

- 68x12mm vertical bars
- Tested to BS EN 442 standards
- Single profile construction
- 4 colours available from stock
- Not suitable for elements
- Comes with same colour blanking plug & bleed valve (brushed brass finish only)
- 5 Year Manufacturer's Warranty*

* With conditions

Technical Tables & Drawings
Page 378-379

TECHNICAL INFORMATION

All measurements in Height by Width. Not suitable for elements. For matching valves see pages 338-353. Comes with pre-fitted flow diverter, fitted in the middle of the bottom header. For indirect heating systems only. Tappings are the width of the rail and approx. 51mm off the wall. Projection from wall 84mm.

Designer Range

WARRINGTON TYPE 20 - VERTICAL

Pictured 41.0547 Gloss White

Warrington Designer Radiator will be the centre of attention in any room with its perfectly crafted elliptical front panels. Completing your radiator with the extra towel hangers has never been easier. Double panel Warrington Radiator is available in vertical & horizontal sizes and 3 colours.

FEATURES

- 68x12mm vertical bars
- Tested to BS EN 442 standards
- Double profile construction
- 3 colours available from stock
- Not suitable for elements
- 5 Year Manufacturer's Warranty*

* With conditions

Technical Tables & Drawings
Page 378-379

Bar Dimensions (mm)

Vertical Bars 68 x 12mm

Pictured 41.0539 Matt Anthracite with 41.0569 Towel Hanger

TECHNICAL INFORMATION

All measurements in Height by Width. Not suitable for elements. For matching valves see pages 338-353. Comes with pre-fitted flow diverter, fitted in the middle of the bottom header. For indirect heating systems only. Tappings are the width of the rail and approx. 51mm off the wall. Projection from wall 84mm.

Double profile construction

Designer Range

WARRINGTON TYPE 20 - VERTICAL

Gloss White

Warrington Type 20 Vertical Radiators - Gloss White 1800mm Height

Width	Delta △T30		Delta △T50		Code	£ Ex VAT	£ Inc VAT
	Watts	BTU	Watts	BTU			
304mm	468	1596	902	3076	41.0535	271.00	**325.20**
380mm	584	1992	1127	3844	41.0538	340.00	**408.00**
456mm	701	2391	1352	4611	41.0541	398.00	**477.60**
532mm	818	2790	1578	5381	41.0544	458.00	**549.60**
608mm	935	3189	1803	6149	41.0547	519.00	**622.80**
684mm	1052	3588	2028	6916	41.0847	580.00	**696.00**

Matt Anthracite

Warrington Type 20 Vertical Radiators - Matt Anthracite 1800mm Height

Width	Delta △T30		Delta △T50		Code	£ Ex VAT	£ Inc VAT
	Watts	BTU	Watts	BTU			
304mm	468	1596	902	3076	41.0536	287.00	**344.40**
380mm	584	1992	1127	3844	41.0539	349.00	**418.80**
456mm	701	2391	1352	4611	41.0542	410.00	**492.00**
532mm	818	2790	1578	5381	41.0545	471.00	**565.20**
608mm	935	3189	1803	6149	41.0548	533.00	**639.60**
684mm	1052	3588	2028	6916	41.0848	595.00	**714.00**

Matt Black

Warrington Type 20 Vertical Radiators - Matt Black 1800mm Height

Width	Delta △T30		Delta △T50		Code	£ Ex VAT	£ Inc VAT
	Watts	BTU	Watts	BTU			
304mm	468	1596	902	3076	41.0537	287.00	**344.40**
380mm	584	1992	1127	3844	41.0540	349.00	**418.80**
456mm	701	2391	1352	4611	41.0543	410.00	**492.00**
532mm	818	2790	1578	5381	41.0546	471.00	**565.20**
608mm	935	3189	1803	6149	41.0549	533.00	**639.60**
684mm	1052	3588	2028	6916	41.0849	595.00	**714.00**

Pictured 41.0847 Gloss White

WARRINGTON TOWEL HANGERS TYPE10 & TYPE20

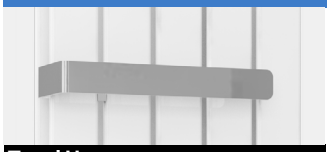

Towel Hanger - Mirror Polished Premium

Size	Code	£ Ex VAT	£ Inc VAT
239mm	41.0565	53.00	**63.60**
300mm	41.0569	57.00	**68.40**
380mm	41.0573	62.00	**74.40**
500mm	41.0577	71.00	**85.20**

Towel Hanger - Gloss White

Size	Code	£ Ex VAT	£ Inc VAT
239mm	41.0566	50.00	**60.00**
300mm	41.0570	53.00	**63.60**
380mm	41.0574	58.00	**69.60**
500mm	41.0578	65.00	**78.00**

Towel Hanger - Matt Anthracite

Size	Code	£ Ex VAT	£ Inc VAT
239mm	41.0567	50.00	**60.00**
300mm	41.0571	53.00	**63.60**
380mm	41.0575	58.00	**69.60**
500mm	41.0579	65.00	**78.00**

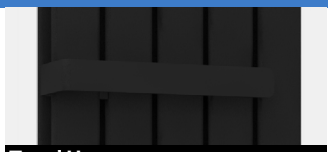

Towel Hanger - Matt Black

Size	Code	£ Ex VAT	£ Inc VAT
239mm	41.0568	50.00	**60.00**
300mm	41.0572	53.00	**63.60**
380mm	41.0576	58.00	**69.60**
500mm	41.0580	65.00	**78.00**

Towel Hanger - Brushed Brass Premium

Size	Code	£ Ex VAT	£ Inc VAT
239mm	41.0800	67.00	**80.40**
300mm	41.0801	72.00	**86.40**
380mm	41.0802	78.00	**93.60**
500mm	41.0803	89.00	**106.80**

Pictured 41.0732

Bleed Valve & Blanking Plug Set - Brushed Brass

Code	£ Ex VAT	£ Inc VAT
41.0732	11.00	**13.20**

TECHNICAL INFORMATION

Material: **Steel (Premium: Stainless Steel - Grade 304)**

Warrington radiators do not come with towel hanger locations. Towel hangers can be fitted on any desired height, left or right handed and with the quantity chosen. Warrington Towel Hangers can be fitted on vertical & horizontal sizes.

Must be fitted before installation. Warrington Towel Hangers are only compatible with Warrington Type 10 & Type 20 radiators.

Warranty 5 Year

Heating

Designer Range

LEONARDO - CHROME

Warranty 5 Year | Heating | All Electric | Dual-Fuel

Pictured 41.0259 Chrome

Pictured 41.0265 Chrome

Bar Dimensions (mm)

Horizontal Bars 42 x 14mm

Leonardo - Chrome

Size H x W	Delta △T30 Watts	Delta △T30 BTU	Delta △T50 Watts	Delta △T50 BTU	Element Output	Code	£ Ex VAT	£ Inc VAT
600 x 400mm	68	232	135	461	150W	41.0255	286.00	**343.20**
600 x 500mm	82	280	162	553	150W	41.0258	310.00	**372.00**
600 x 600mm	95	324	189	645	150W	41.0263	339.00	**406.80**
688 x 500mm	93	318	182	621	150W	41.0261	323.00	**387.60**
1200 x 400mm	128	437	255	870	300W	41.0256	481.00	**577.20**
1200 x 500mm	153	522	305	1041	300W	41.0259	534.00	**640.80**
1200 x 600mm	175	597	350	1194	300W	41.0264	580.00	**696.00**
1450 x 500mm	184	628	370	1262	450W	41.0262	627.00	**752.40**
1800 x 400mm	192	655	389	1327	450W	41.0257	670.00	**804.00**
1800 x 500mm	230	785	466	1590	450W	41.0260	739.00	**886.80**
1800 x 600mm	276	942	540	1842	600W	41.0265	807.00	**968.40**

The single sided pipes on this wonderfully stylish Leonardo rail allows maximium hanging space.

FEATURES

- 42 x 14mm. horizontal bars
- Tested to BS EN 442 standards
- Can be reverse handed (left or right)
- Can be single or dual fuel, or all electric
- Comes with same colour blanking plug & bleed valve (brushed brass finish only)
- 5 Year manufacturer's warranty*

* With conditions

TECHNICAL INFORMATION

All measurements in Height by Width. Radiators that are electric only are restricted to the heat output of the elements. Element size can be increased to full capacity of rail if using element type B, D, E, F or G. For element types see pages 324-337. For matching valves see pages 338-353. For indirect heating systems only. Tappings are approx. 82mm and approx. 65mm off the wall. Price includes radiator and wall fixing sets, valves extra.

All Leonardo models shown above are compatible with Element Type A, A+, B, D, E, F, and G

Designer Range

LEONARDO - BRUSHED BRASS

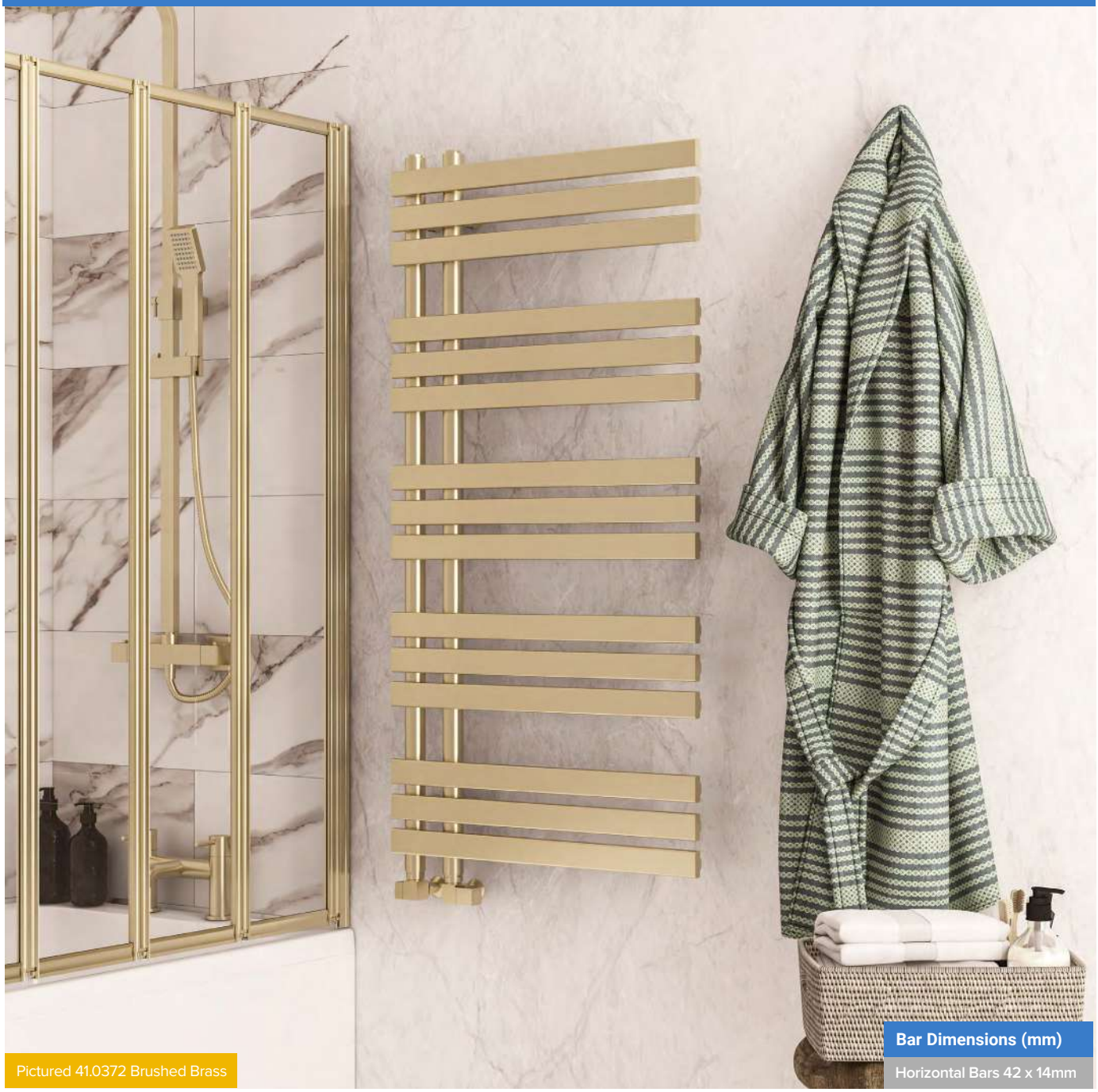

Pictured 41.0372 Brushed Brass

Bar Dimensions (mm)

Horizontal Bars 42 x 14mm

The single sided pipes on this wonderfully stylish Leonardo rail allows maximium hanging space.

FEATURES

- 42 x 14mm. horizontal bars
- Tested to BS EN 442 standards
- Can be reverse handed (left or right)
- Can be single or dual fuel, or all electric
- Comes with same colour blanking plug & bleed valve (brushed brass finish only)
- 5 Year manufacturer's warranty*

* With conditions

Technical Tables & Drawings
Page 380-381

Brushed Brass colour shown in images are subject to the limitations of the printing process and may appear different.

Leonardo - Brushed Brass

Size H x W	Delta △T30		Delta △T50		Element Output	Code	£ Ex VAT	£ Inc VAT
	Watts	BTU	Watts	BTU				
1200 x 500mm	184	628	366	1249	300W	41.0371	713.00	**855.60**
1200 x 600mm	228	778	442	1508	450W	41.0372	770.00	**924.00**

TECHNICAL INFORMATION

All measurements in Height by Width. Radiators that are electric only are restricted to the heat output of the elements. Element size can be increased to full capacity of rail if using element type B, D, E, F or G. For element types see pages 324-337. For matching valves see pages 338-353. For indirect heating systems only. Tappings are approx. 82mm and approx. 65mm off the wall. Price includes radiator and wall fixing sets, valves extra.

All Leonardo models shown above are compatible with Element Type A, A+, B, D, E, F, and G

Designer Range

STAVERTON - TUBE ON TUBE - STRAIGHT

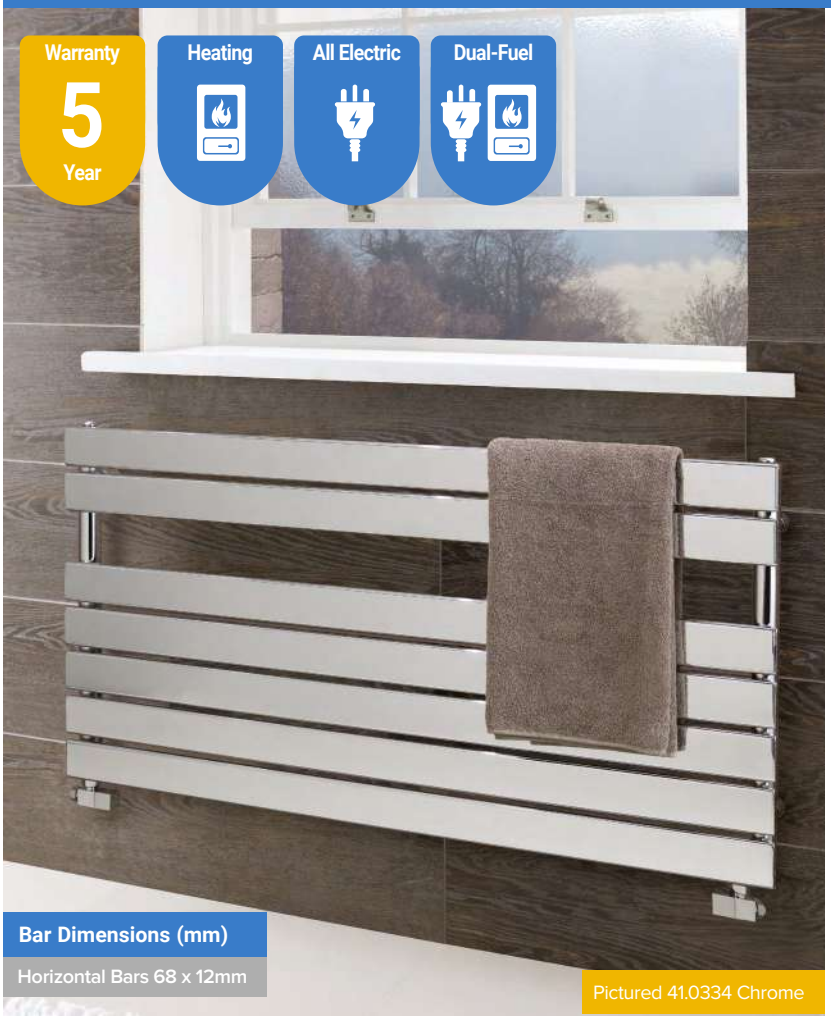

Staverton Tube on Tube towel rails feature stylish flat horizontal bars, offering a clean and contemporary look. Available in three popular colour options, they combine

Staverton - Tube on Tube - Straight Gloss White

Size H x W	Delta △T30 Watts	Delta △T30 BTU	Delta △T50 Watts	Delta △T50 BTU	Element Output	Code	£ Ex VAT	£ Inc VAT
600 x 400mm	139	474	260	887	150W	41.0190	231.00	**277.20**
600 x 500mm	166	567	310	1058	150W	41.0193	251.00	**301.20**
600 x 600mm	193	659	358	1221	300W	41.0196	273.00	**327.60**
1200 x 400mm	244	833	467	1593	300W	41.0191	372.00	**446.40**
1200 x 500mm	295	1006	556	1896	450W	41.0194	387.00	**464.40**
1200 x 600mm	332	1133	626	2135	450W	41.0197	425.00	**510.00**
1800 x 400mm	373	1272	702	2394	600W	41.0192	535.00	**642.00**
1800 x 500mm	457	1559	866	2954	600W	41.0195	562.00	**674.40**
1800 x 600mm	515	1757	975	3325	750W	41.0198	620.00	**744.00**

Staverton - Tube on Tube - Straight Brushed Brass

Size H x W	Delta △T30 Watts*	Delta △T30 BTU*	Delta △T50 Watts*	Delta △T50 BTU*	Element Output	Code	£ Ex VAT	£ Inc VAT
1200 x 500mm	252	860	482	1644	300W	41.0375	893.00	**1071.60**
1200 x 600mm	290	989	555	1893	300W	41.0376	966.00	**1159.20**

* Further heat output information available on eastbrooktrade.com **E&OA**

Staverton - Tube on Tube - Straight Chrome

Size H x W	Delta △T30 Watts	Delta △T30 BTU	Delta △T50 Watts	Delta △T50 BTU	Element Output	Code	£ Ex VAT	£ Inc VAT
600 x 400mm	90	307	172	587	150W	41.0181	401.00	**481.20**
600 x 500mm	91	311	175	597	150W	41.0184	437.00	**524.40**
600 x 600mm	127	434	237	809	150W	41.0187	476.00	**571.20**
600 x 1000mm	253*	863*	485*	1654*	300W	41.0333	587.00	**704.40**
600 x 1200mm	217	740	405	1382	300W	41.0334	607.00	**728.40**
800 x 1000mm	200	682	389	1327	450W	41.0335	678.00	**813.60**
800 x 1200mm	272	928	508	1733	450W	41.0336	766.00	**919.20**
1200 x 400mm	146	498	283	966	300W	41.0182	685.00	**822.00**
1200 x 500mm	177	604	337	1150	300W	41.0185	721.00	**865.20**
1200 x 600mm	215	734	412	1405	300W	41.0188	790.00	**948.00**
1800 x 400mm	227	775	437	1491	450W	41.0183	958.00	**1149.60**
1800 x 500mm	243	829	470	1603	450W	41.0186	1010.00	**1212.00**
1800 x 600mm	306	1044	584	1992	600W	41.0189	1179.00	**1414.80**

* Further heat output information available on eastbrooktrade.com **E&OA**

FEATURES

- 68 x 12mm. horizontal bars
- Rear fixing wall brackets
- Tested to BS EN 442 standards
- Can be single or dual fuel, or all electric
- Comes with same colour blanking plug & bleed valve (brushed brass finish only)
- 5 Year manufacturer's warranty*

* With conditions

Technical Tables & Drawings
Page 380-381

TECHNICAL INFORMATION

All measurements in Height by Width. Radiators that are electric only are restricted to the heat output of the elements. Element size can be increased to full capacity of rail if using element type B, D, E, F or G. For element types see pages 324-337. For matching valves see pages 338-353. For indirect heating systems only. Tappings are approx. 50mm less than the width of the rail and approx. 65mm off the wall. Price includes radiator and wall fixing sets, valves extra.

Brushed Brass colour shown in images are subject to the limitations of the printing process and may appear different.

All Staverton Tube on Tube Straight models shown above are compatible with Element Type A, A+, B, D, E, F, and G

Designer Range

STAVERTON - TUBE ON TUBE - CURVED

Pictured 41.0234 Chrome

Bar Dimensions (mm)

Horizontal Bars 42 x 14mm

Rear fixing wall brackets

Pictured 41.0237 Chrome

The Staverton Tube on Tube Curved allows the hanging of larger, fluffier towels for the ultimate luxury.

Chrome

Staverton - Tube on Tube - Curved Chrome 600mm Height

Width	Delta △T30 Watts	Delta △T30 BTU	Delta △T50 Watts	Delta △T50 BTU	Element Output	Element Type	Code	£ Ex VAT	£ Inc VAT
500mm	100	341	190	648	150W	A, A+, B, D, E, F, G	41.0232	387.00	**464.40**
600mm	110	376	207	706	150W	A, A+, B, D, E, F, G	41.0233	425.00	**510.00**

Staverton - Tube on Tube - Curved Chrome 1200mm Height

Width	Delta △T30 Watts	Delta △T30 BTU	Delta △T50 Watts	Delta △T50 BTU	Element Output	Element Type	Code	£ Ex VAT	£ Inc VAT
500mm	191	652	365	1245	300W	A, A+, B, D, E, F, G	41.0234	678.00	**813.60**
600mm	212	723	404	1378	450W	A, A+, B, D, E, F, G	41.0235	743.00	**891.60**

Staverton - Tube on Tube - Curved Chrome 1800mm Height

Width	Delta △T30 Watts	Delta △T30 BTU	Delta △T50 Watts	Delta △T50 BTU	Element Output	Element Type	Code	£ Ex VAT	£ Inc VAT
500mm	291	993	560	1910	450W	A, A+, B, D, E, F, G	41.0236	962.00	**1154.40**
600mm	318	1085	613	2091	600W	A, A+, B, D, E, F, G	41.0237	1060.00	**1272.00**

FEATURES

- 42 x 14mm. horizontal bars
- Rear fixing wall brackets
- Tested to BS EN 442 standards
- 5 Year manufacturer's warranty
- Can be single or dual fuel, or all electric

* With conditions

Technical Tables & Drawings

Page 380-381

TECHNICAL INFORMATION

All measurements in Height by Width. Radiators that are electric only are restricted to the heat output of the elements. Element size can be increased to full capacity of rail if using element type B, D, E, F or G. For element types see pages 324-337. For matching valves see pages 338-353. For indirect heating systems only. Tappings are approx. 45mm less than the width of the rail and approx. 65mm off the wall. Price includes radiator and wall fixing sets, valves extra.

Warranty 5 Year | Heating | All Electric | Dual-Fuel

Designer Range

DEFFORD

Pictured 89.1303 Chrome

Bar Dimensions (mm)

Horizontal Bars 40 x 10mm
Vertical Bars 40 x 30mm

Pictured 89.1294 Matt Black

Rear fixing metal wall brackets

Defford has been specifically designed to give maximum space for your towels and can produce enough warmth to heat a bathroom.

FEATURES

- 40 x 10mm. horizontal bars with 40 x 30mm. vertical D profile
- Tested to BS EN 442 standards
- Rear fixing metal wall brackets
- 5 colours available from stock
- 5 Year manufacturer's warranty*
- Can be single or dual fuel, or all electric

* With conditions

Technical Tables & Drawings
Page 382-383

Warranty 5 Year

Heating

All Electric

Dual-Fuel

Designer Range

DEFFORD

Defford Towel Rail - Gloss White

Size H x W	Delta △T30 Watts	Delta △T30 BTU	Delta △T50 Watts	Delta △T50 BTU	Element Output	Code	£ Ex VAT	£ Inc VAT
800 x 500mm	169	577	322	1099	150W	89.1274	124.00	**148.80**
800 x 600mm	195	665	371	1266	150W	89.1275	138.00	**165.60**
1200 x 500mm	252	860	479	1634	300W	89.1276	197.00	**236.40**
1200 x 600mm	291	993	553	1886	450W	89.1277	223.00	**267.60**
1800 x 500mm	374	1276	710	2422	600W	89.1278	276.00	**331.20**
1800 x 600mm	432	1474	819	2793	600W	89.1279	303.00	**363.60**

Defford Towel Rail - Matt Anthracite

Size H x W	Delta △T30 Watts	Delta △T30 BTU	Delta △T50 Watts	Delta △T50 BTU	Element Output	Code	£ Ex VAT	£ Inc VAT
800x500mm	169	577	322	1099	150W	89.1286	124.00	**148.80**
800x600mm	195	665	371	1266	150W	89.1287	138.00	**165.60**
1200x500mm	252	860	479	1634	300W	89.1288	197.00	**236.40**
1200x600mm	291	993	553	1886	450W	89.1289	223.00	**267.60**
1800x500mm	374	1276	710	2422	600W	89.1290	276.00	**331.20**
1800x600mm	432	1474	819	2793	600W	89.1291	303.00	**363.60**

Defford Towel Rail - Matt Grey

Size H x W	Delta △T30 Watts	Delta △T30 BTU	Delta △T50 Watts	Delta △T50 BTU	Element Output	Code	£ Ex VAT	£ Inc VAT
800 x 500mm	169	577	322	1099	150W	89.1280	124.00	**148.80**
800 x 600mm	195	665	371	1266	150W	89.1281	138.00	**165.60**
1200 x 500mm	252	860	479	1634	300W	89.1282	197.00	**236.40**
1200 x 600mm	291	993	553	1886	450W	89.1283	223.00	**267.60**
1800 x 500mm	374	1276	710	2422	600W	89.1284	276.00	**331.20**
1800 x 600mm	432	1474	819	2793	600W	89.1285	303.00	**363.60**

Defford Towel Rail - Matt Black

Size H x W	Delta △T30 Watts	Delta △T30 BTU	Delta △T50 Watts	Delta △T50 BTU	Element Output	Code	£ Ex VAT	£ Inc VAT
800x500mm	169	577	322	1099	150W	89.1292	124.00	**148.80**
800x600mm	195	665	371	1266	150W	89.1293	138.00	**165.60**
1200x500mm	252	860	479	1634	300W	89.1294	197.00	**236.40**
1200x600mm	291	993	553	1886	450W	89.1295	223.00	**267.60**
1800x500mm	374	1276	710	2422	600W	89.1296	276.00	**331.20**
1800x600mm	432	1474	819	2793	600W	89.1297	303.00	**363.60**

Defford Towel Rail - Chrome

Size H x W	Delta △T30 Watts	Delta △T30 BTU	Delta △T50 Watts	Delta △T50 BTU	Element Output	Code	£ Ex VAT	£ Inc VAT
800 x 500mm	102	348	198	676	150W	89.1298	182.00	**218.40**
800 x 600mm	117	399	226	771	150W	89.1299	205.00	**246.00**
1200 x 500mm	151	515	293	1000	150W	89.1300	322.00	**386.40**
1200 x 600mm	173	590	335	1143	150W	89.1301	359.00	**430.80**
1800 x 500mm	225	768	438	1494	300W	89.1302	461.00	**553.20**
1800 x 600mm	258	880	501	1709	300W	89.1303	525.00	**630.00**

D Shape Vent Caps
Page 357

All Defford models shown above are compatible with Element Type A, A+, B, D, E, F, and G

TECHNICAL INFORMATION

All measurements in Height by Width. Radiators that are electric only are restricted to the heat output of the elements. Element size can be increased to full capacity of rail if using element type B, D, E, F or G. For element types see pages 324-337. For matching valves see pages 338-353. For indirect heating systems only. Tappings are approx. 45mm less than the width of the rail and approx. 80mm off the wall. Price includes radiator and wall fixing sets, valves extra.

Gloss White

Matt Grey

Chrome

Matt Anthracite

Matt Black

Designer Range

STAVERTON

Pictured 41.0131 Chrome

Pictured 41.0135 Chrome

A modern style towel rail with horizontal flat bars, that still allows maximum space for keeping your towels warm.

FEATURES

- 42 x 14mm. horizontal bars
- Tested to BS EN 442 standards
- Comes in chrome, brushed brass or white finish
- Can be single or dual fuel, or all electric
- Comes with same colour blanking plug & bleed valve (brushed brass colour only)
- 5 Year manufacturer's warranty*

* With conditions

Technical Tables & Drawings
Page 382-383

Warranty 5 | Heating | All Electric | Dual-Fuel

TECHNICAL INFORMATION

All measurements in Height by Width. Radiators that are electric only are restricted to the heat output of the elements. Element size can be increased to full capacity of rail if using element type B, D, E, F or G. For element types see pages 324-337. For matching valves see pages 338-353. For indirect heating systems only. Tappings are approx. 45mm less than the width of the rail and approx. 70mm off the wall. Price includes radiator and wall fixing sets, valves extra.

Chrome

Staverton - Chrome 600mm Height

Width	Delta △T30 Watts	Delta △T30 BTU	Delta △T50 Watts	Delta △T50 BTU	Element Output	Element Type	Code	£ Ex VAT	£ Inc VAT
400mm	67	229	129	440	100W	A, A+, B, D, E, F, G	41.0127	215.00	**258.00**
500mm	80	273	153	522	150W	A, A+, B, D, E, F, G	41.0130	248.00	**297.60**
600mm	93	318	174	594	150W	A, A+, B, D, E, F, G	41.0133	258.00	**309.60**

Staverton - Chrome 1200mm Height

Width	Delta △T30 Watts	Delta △T30 BTU	Delta △T50 Watts	Delta △T50 BTU	Element Output	Element Type	Code	£ Ex VAT	£ Inc VAT
400mm	141	481	268	914	150W	A, A+, B, D, E, F, G	41.0128	372.00	**446.40**
500mm	166	567	316	1078	300W	A, A+, B, D, E, F, G	41.0131	412.00	**494.40**
600mm	187	638	371	1266	300W	A, A+, B, D, E, F, G	41.0134	451.00	**541.20**

Staverton - Chrome 1800mm Height

Width	Delta △T30 Watts	Delta △T30 BTU	Delta △T50 Watts	Delta △T50 BTU	Element Output	Element Type	Code	£ Ex VAT	£ Inc VAT
400mm	212	723	400	1364	300W	A, A+, B, D, E, F, G	41.0129	529.00	**634.80**
500mm	250	853	472	1610	450W	A, A+, B, D, E, F, G	41.0132	585.00	**702.00**
600mm	289	986	540	1842	600W	A, A+, B, D, E, F, G	41.0135	649.00	**778.80**

Designer Range

STAVERTON

Bar Dimensions (mm)

Horizontal Bars 42 x 14mm
Vertical Bars 40 x 30mm

Pictured 41.0144 Gloss White

High quality PVD coating

Pictured 41.0373 Brushed Brass

Rear fixing metal wall brackets (only for brushed brass colour)

Gloss White

Staverton - Gloss White 600mm Height

Width	Delta △T30 Watts	Delta △T30 BTU	Delta △T50 Watts	Delta △T50 BTU	Element Output	Element Type	Code	£ Ex VAT	£ Inc VAT
400mm	113	386	213	727	150W	A, A+, B, D, E, F, G	41.0136	125.00	**150.00**
500mm	136	464	257	877	150W	A, A+, B, D, E, F, G	41.0139	136.00	**163.20**
600mm	159	543	299	1020	150W	A, A+, B, D, E, F, G	41.0142	146.00	**175.20**

Staverton - Gloss White 1200mm Height

Width	Delta △T30 Watts	Delta △T30 BTU	Delta △T50 Watts	Delta △T50 BTU	Element Output	Element Type	Code	£ Ex VAT	£ Inc VAT
400mm	217	740	411	1402	300W	A, A+, B, D, E, F, G	41.0137	203.00	**243.60**
500mm	261	891	495	1688	300W	A, A+, B, D, E, F, G	41.0140	217.00	**260.40**
600mm	304	1037	576	1965	450W	A, A+, B, D, E, F, G	41.0143	239.00	**286.80**

Staverton - Gloss White 1800mm Height

Width	Delta △T30 Watts	Delta △T30 BTU	Delta △T50 Watts	Delta △T50 BTU	Element Output	Element Type	Code	£ Ex VAT	£ Inc VAT
400mm	325	1109	621	2118	450W	A, A+, B, D, E, F, G	41.0138	280.00	**336.00**
500mm	391	1334	748	2551	600W	A, A+, B, D, E, F, G	41.0141	305.00	**366.00**
600mm	455	1552	871	2971	600W	A, A+, B, D, E, F, G	41.0144	334.00	**400.80**

Brushed Brass

Staverton - Brushed Brass 1200mm Height

Width	Delta △T30 Watts	Delta △T30 BTU	Delta △T50 Watts	Delta △T50 BTU	Element Output	Element Type	Code	£ Ex VAT	£ Inc VAT
500mm	226	771	433	1477	300W	A, A+, B, D, E, F, G	41.0373	598.00	**717.60**
600mm	281	959	539	1838	300W	A, A+, B, D, E, F, G	41.0374	644.00	**772.80**

Warranty 5 | Heating | All Electric | Dual-Fuel

TECHNICAL INFORMATION

All measurements in Height by Width. Radiators that are electric only are restricted to the heat output of the elements. Element size can be increased to full capacity of rail if using element type B, D, E, F or G. For element types see pages 324-337. For matching valves see pages 338-353. For indirect heating systems only. Tappings are approx. 45mm less than the width of the rail and approx. 70mm off the wall. Price includes radiator and wall fixing sets, valves extra.

Brushed Brass colour shown in images are subject to the limitations of the printing process and may appear different.

Designer Range

SANTERO

Pictured 89.1327 Chrome

Bar Dimensions (mm)

Horizontal Bars 75 x 15mm
Vertical Bars 40 x 30mm

Pictured 89.1307 Gloss White

Rear fixing metal wall brackets

An admired design in the Designer Range, Santero, has even wider horizontal flat bars than Defford or Staverton. Warmth has never been this easy to achieve. Grab your wet towels and use Santero Towel Rail to feel the constant warmth.

FEATURES

- 75 x 15mm. horizontal bars and 40 x 30mm. vertical D profiles
- Rear fixing metal wall brackets
- Tested to BS EN 442 standards
- 4 colours available from stock
- Can be single, dual fuel or all electric
- 5 Year Manufacturer's Warranty*

* With conditions

Technical Tables & Drawings
Page 382-383

Designer Range

SANTERO

Santero Towel Rail - Gloss White

Size H x W	Delta △T30 Watts	Delta △T30 BTU	Delta △T50 Watts	Delta △T50 BTU	Element Output	Code	£ Ex VAT	£ Inc VAT
800 x 500mm	181	618	342	1167	150W	89.1304	241.00	**289.20**
800 x 600mm	214	730	405	1382	150W	89.1305	283.00	**339.60**
1200 x 500mm	266	908	504	1719	300W	89.1306	311.00	**373.20**
1200 x 600mm	315	1075	597	2036	300W	89.1307	364.00	**436.80**
1800 x 500mm	392	1337	742	2531	450W	89.1308	431.00	**517.20**
1800 x 600mm	464	1583	879	2998	600W	89.1309	503.00	**603.60**

Santero Towel Rail - Matt Black

Size H x W	Delta △T30 Watts	Delta △T30 BTU	Delta △T50 Watts	Delta △T50 BTU	Element Output	Code	£ Ex VAT	£ Inc VAT
800 x 500mm	181	618	342	1167	150W	89.1316	241.00	**289.20**
800 x 600mm	214	730	405	1382	150W	89.1317	283.00	**339.60**
1200 x 500mm	266	908	504	1719	300W	89.1318	311.00	**373.20**
1200 x 600mm	315	1075	597	2036	300W	89.1319	364.00	**436.80**
1800 x 500mm	392	1337	742	2531	450W	89.1320	431.00	**517.20**
1800 x 600mm	464	1583	879	2998	600W	89.1321	503.00	**603.60**

Santero Towel Rail - Matt Anthracite

Size H x W	Delta △T30 Watts	Delta △T30 BTU	Delta △T50 Watts	Delta △T50 BTU	Element Output	Code	£ Ex VAT	£ Inc VAT
800 x 500mm	181	618	342	1167	150W	89.1310	241.00	**289.20**
800 x 600mm	214	730	405	1382	150W	89.1311	283.00	**339.60**
1200 x 500mm	266	908	504	1719	300W	89.1312	311.00	**373.20**
1200 x 600mm	315	1075	597	2036	300W	89.1313	364.00	**436.80**
1800 x 500mm	392	1337	742	2531	450W	89.1314	431.00	**517.20**
1800 x 600mm	464	1583	879	2998	600W	89.1315	503.00	**603.60**

Santero Towel Rail - Chrome

Size H x W	Delta △T30 Watts	Delta △T30 BTU	Delta △T50 Watts	Delta △T50 BTU	Element Output	Code	£ Ex VAT	£ Inc VAT
800 x 500mm	101	345	196	669	150W	89.1322	324.00	**388.80**
800 x 600mm	117	399	228	778	150W	89.1323	378.00	**453.60**
1200 x 500mm	152	519	295	1006	150W	89.1324	392.00	**470.40**
1200 x 600mm	177	604	343	1170	150W	89.1325	459.00	**550.80**
1800 x 500mm	227	775	436	1487	300W	89.1326	531.00	**637.20**
1800 x 600mm	263	897	507	1729	450W	89.1327	622.00	**746.40**

All Santero models shown above are compatible with Element Type A, A+, B, D, E, F, and G

TECHNICAL INFORMATION

All measurements in Height by Width. Radiators that are electric only are restricted to the heat output of the elements. Element size can be increased to full capacity of rail if using element type B, D, E, F or G. For element types see pages 324-337. For matching valves see pages 338-353. For indirect heating systems only. Tappings are approx. 45mm less than the width of the rail and approx. 80mm off the wall. Price includes radiator and wall fixing sets, valves extra.

Gloss White

Matt Anthracite

Matt Black

Chrome

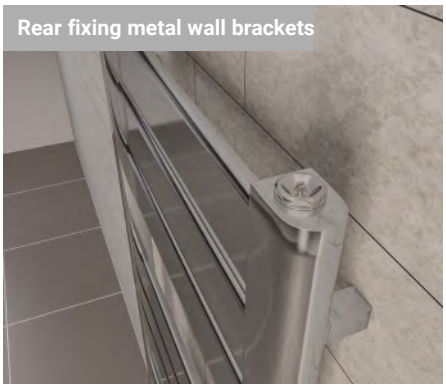

Rear fixing metal wall brackets

State-of-the-Art welding

Radiator Valves
Page 338-353

D Shape Vent Caps
Page 357

Designer Range

HURLEY

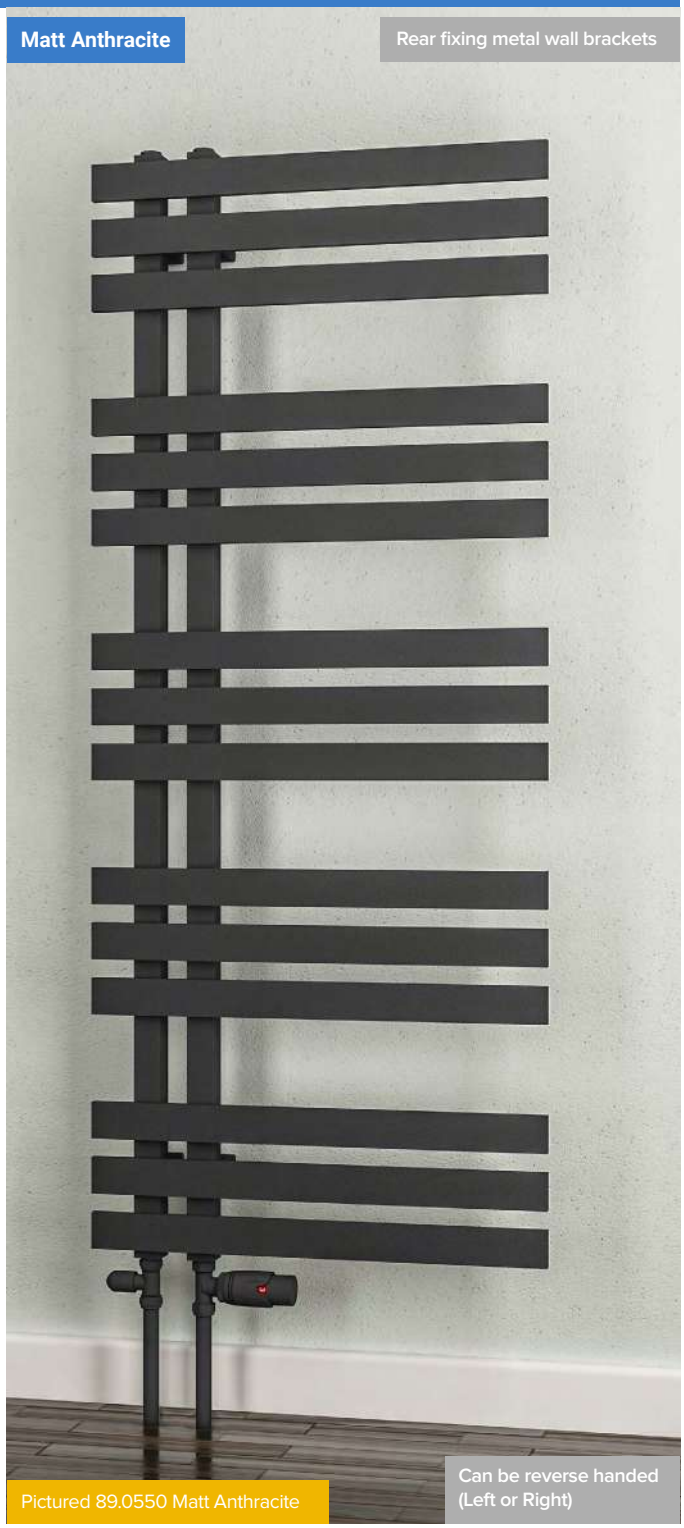

A modern, versatile towel rail. Available in 6 colours with reversible installation possibility.

FEATURES
- 40 x 10mm. horizontal bars and 30 x 30mm. vertical profiles
- Rear fixing metal wall brackets
- Tested to BS EN 442 standards
- 7 colours available from stock
- Can be reverse handed (left or right)
- Can be single, dual fuel or all electric
- 5 Year Manufacturer's Warranty*

* With conditions

Warranty 5 Year

Heating

All Electric

Dual-Fuel

Designer Range

HURLEY

Chrome

Hurley Towel Rail - Chrome 800mm Height

Width	Delta △T30 Watts	Delta △T30 BTU	Delta △T50 Watts	Delta △T50 BTU	Element Output	Element Type	Code	£ Ex VAT	£ Inc VAT
500mm	92	314	186	635	150W	A, A+, B, D, E, F, G	89.0566	327.00	**392.40**
600mm	103	352	208	710	150W	A, A+, B, D, E, F, G	89.0567	367.00	**440.40**

Hurley Towel Rail - Chrome 1000mm Height

Width	Delta △T30 Watts	Delta △T30 BTU	Delta △T50 Watts	Delta △T50 BTU	Element Output	Element Type	Code	£ Ex VAT	£ Inc VAT
500mm	115	393	232	792	100W	A, A+, B, D, E, F, G	89.1727	395.00	**474.00**
600mm	129	440	260	887	100W	A, A+, B, D, E, F, G	89.1728	443.00	**531.60**

Hurley Towel Rail - Chrome 1200mm Height

Width	Delta △T30 Watts	Delta △T30 BTU	Delta △T50 Watts	Delta △T50 BTU	Element Output	Element Type	Code	£ Ex VAT	£ Inc VAT
500mm	138	471	278	948	150W	A, A+, B, D, E, F, G	89.0568	453.00	**543.60**
600mm	155	529	311	1061	150W	A, A+, B, D, E, F, G	89.0569	507.00	**608.40**

Hurley Towel Rail - Chrome 1500mm Height

Width	Delta △T30 Watts	Delta △T30 BTU	Delta △T50 Watts	Delta △T50 BTU	Element Output	Element Type	Code	£ Ex VAT	£ Inc VAT
500mm	172	587	344	1174	150W	A, A+, B, D, E, F, G	89.1739	548.00	**657.60**
600mm	192	655	386	1317	150W	A, A+, B, D, E, F, G	89.1740	612.00	**734.40**

Hurley Towel Rail - Chrome 1800mm Height

Width	Delta △T30 Watts	Delta △T30 BTU	Delta △T50 Watts	Delta △T50 BTU	Element Output	Element Type	Code	£ Ex VAT	£ Inc VAT
500mm	204	696	408	1392	300W	A, A+, B, D, E, F, G	89.0570	626.00	**751.20**
600mm	229	781	457	1559	300W	A, A+, B, D, E, F, G	89.0571	699.00	**838.80**

Matt Anthracite

Hurley Towel Rail - Matt Anthracite 800mm Height

Width	Delta △T30 Watts	Delta △T30 BTU	Delta △T50 Watts	Delta △T50 BTU	Element Output	Element Type	Code	£ Ex VAT	£ Inc VAT
500mm	145	495	289	986	150W	A, A+, B, D, E, F, G	89.0548	258.00	**309.60**
600mm	163	556	324	1105	150W	A, A+, B, D, E, F, G	89.0549	291.00	**349.20**

Hurley Towel Rail - Matt Anthracite 1000mm Height

Width	Delta △T30 Watts	Delta △T30 BTU	Delta △T50 Watts	Delta △T50 BTU	Element Output	Element Type	Code	£ Ex VAT	£ Inc VAT
500mm	185	631	366	1249	150W	A, A+, B, D, E, F, G	89.1723	315.00	**378.00**
600mm	205	700	405	1382	150W	A, A+, B, D, E, F, G	89.1724	353.00	**423.60**

Hurley Towel Rail - Matt Anthracite 1200mm Height

Width	Delta △T30 Watts	Delta △T30 BTU	Delta △T50 Watts	Delta △T50 BTU	Element Output	Element Type	Code	£ Ex VAT	£ Inc VAT
500mm	219	747	432	1474	300W	A, A+, B, D, E, F, G	89.0550	356.00	**427.20**
600mm	245	836	485	1654	300W	A, A+, B, D, E, F, G	89.0551	398.00	**477.60**

Hurley Towel Rail - Matt Anthracite 1500mm Height

Width	Delta △T30 Watts	Delta △T30 BTU	Delta △T50 Watts	Delta △T50 BTU	Element Output	Element Type	Code	£ Ex VAT	£ Inc VAT
500mm	272	928	537	1832	300W	A, A+, B, D, E, F, G	89.1735	413.00	**495.60**
600mm	306	1044	603	2057	300W	A, A+, B, D, E, F, G	89.1736	461.00	**553.20**

Hurley Towel Rail - Matt Anthracite 1800mm Height

Width	Delta △T30 Watts	Delta △T30 BTU	Delta △T50 Watts	Delta △T50 BTU	Element Output	Element Type	Code	£ Ex VAT	£ Inc VAT
500mm	325	1109	639	2179	450W	A, A+, B, D, E, F, G	89.0552	453.00	**543.60**
600mm	365	1245	718	2449	600W	A, A+, B, D, E, F, G	89.0553	507.00	**608.40**

Technical Tables & Drawings
Page 384-385

800mm High

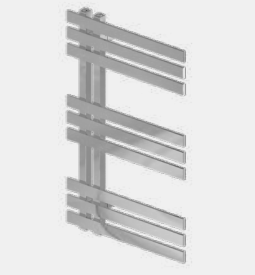

1000mm High

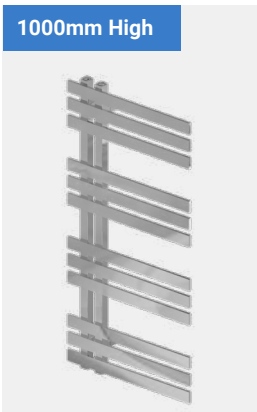

1200mm High

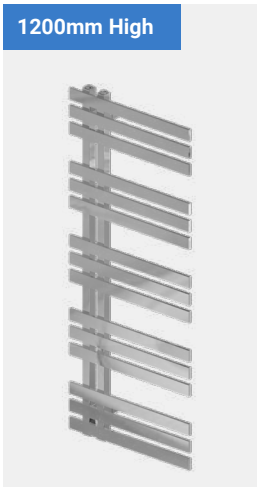

1500mm High

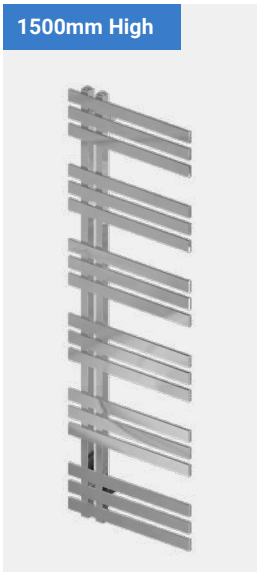

1800mm High

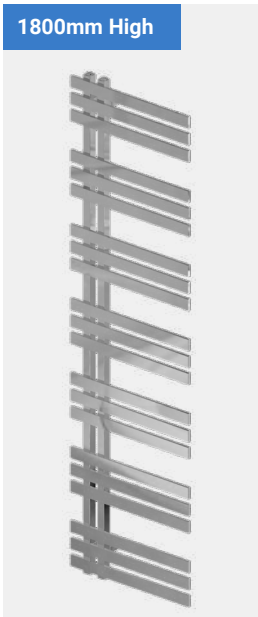

TECHNICAL INFORMATION

All measurements in Height by Width. Radiators that are electric only are restricted to the heat output of the elements. Element size can be increased to full capacity of rail if using element type B, D, E, F or G. For element types see pages 324-337. For matching valves see pages 338-353. For indirect heating systems only. Tappings are approx. 60mm and approx. 79mm off the wall. Price includes radiator and wall fixing sets, valves extra.

Matt White

Matt Grey

Matt Cappuccino

Matt Anthracite

Matt Black

Chrome

Designer Range

HURLEY

A modern, versatile towel rail. Available in 6 colours with reversible installation possibility.

FEATURES
- 40 x 10mm. horizontal bars and 30 x 30mm. vertical profiles
- Rear fixing metal wall brackets
- Tested to BS EN 442 standards
- 7 colours available from stock
- Can be reverse handed (left or right)
- Can be single, dual fuel or all electric
- 5 Year Manufacturer's Warranty*

* With conditions

Technical Tables & Drawings
Page 384-385

Warranty 5 Year

Heating

All Electric

Dual-Fuel

Designer Range

HURLEY

Hurley Towel Rail - Matt White

Size H x W	Delta △T30 Watts	Delta △T30 BTU	Delta △T50 Watts	Delta △T50 BTU	Element Output	Code	£ Ex VAT	£ Inc VAT
800 x 500mm	145	289	289	986	150W	89.0542	258.00	**309.60**
800 x 600mm	163	324	324	1105	150W	89.0543	291.00	**349.20**
1000 x 500mm	185	631	366	1249	150W	89.1717	315.00	**378.00**
1000 x 600mm	205	700	405	1382	150W	89.1718	353.00	**423.60**
1200 x 500mm	219	747	432	1474	300W	89.0544	356.00	**427.20**
1200 x 600mm	245	836	485	1654	300W	89.0545	398.00	**477.60**
1500 x 500mm	272	928	537	1832	300W	89.1729	413.00	**495.60**
1500 x 600mm	306	1044	603	2057	300W	89.1730	461.00	**553.20**
1800 x 500mm	325	1109	639	2179	450W	89.0546	453.00	**543.60**
1800 x 600mm	365	1245	718	2449	600W	89.0547	507.00	**608.40**

Hurley Towel Rail - Matt Grey

Size H x W	Delta △T30 Watts	Delta △T30 BTU	Delta △T50 Watts	Delta △T50 BTU	Element Output	Code	£ Ex VAT	£ Inc VAT
800 x 500mm	145	495	289	986	150W	89.0554	258.00	**309.60**
800 x 600mm	163	556	324	1105	150W	89.0555	291.00	**349.20**
1000 x 500mm	185	631	366	1249	150W	89.1719	315.00	**378.00**
1000 x 600mm	205	700	405	1382	150W	89.1720	353.00	**423.60**
1200 x 500mm	219	747	432	1474	300W	89.0556	356.00	**427.20**
1200 x 600mm	245	836	485	1654	300W	89.0557	398.00	**477.60**
1500 x 500mm	272	928	537	1832	300W	89.1731	413.00	**495.60**
1500 x 600mm	306	1044	603	2057	300W	89.1732	461.00	**553.20**
1800 x 500mm	325	1109	639	2179	450W	89.0558	453.00	**543.60**
1800 x 600mm	365	1245	718	2449	600W	89.0559	507.00	**608.40**

Hurley Towel Rail - Matt Cappuccino

Size H x W	Delta △T30 Watts	Delta △T30 BTU	Delta △T50 Watts	Delta △T50 BTU	Element Output	Code	£ Ex VAT	£ Inc VAT
800 x 500mm	145	495	289	986	150W	89.0560	284.00	**340.80**
800 x 600mm	163	556	324	1105	150W	89.0561	317.00	**380.40**
1000 x 500mm	185	631	366	1249	150W	89.1721	315.00	**378.00**
1000 x 600mm	205	700	405	1382	150W	89.1722	353.00	**423.60**
1200 x 500mm	219	747	432	1474	300W	89.0562	389.00	**466.80**
1200 x 600mm	245	836	485	1654	300W	89.0563	436.00	**523.20**
1500 x 500mm	272	928	537	1832	300W	89.1733	413.00	**495.60**
1500 x 600mm	306	1044	603	2057	300W	89.1734	461.00	**553.20**
1800 x 500mm	325	1109	639	2179	450W	89.0564	496.00	**595.20**
1800 x 600mm	365	1245	718	2449	600W	89.0565	555.00	**666.00**

Hurley Towel Rail - Matt Black

Size H x W	Delta △T30 Watts	Delta △T30 BTU	Delta △T50 Watts	Delta △T50 BTU	Element Output	Code	£ Ex VAT	£ Inc VAT
800 x 500mm	145	495	289	986	150W	89.1711	258.00	**309.60**
800 x 600mm	163	556	324	1105	150W	89.1712	291.00	**349.20**
1000 x 500mm	185	631	366	1249	150W	89.1725	315.00	**378.00**
1000 x 600mm	205	700	405	1382	150W	89.1726	353.00	**423.60**
1200 x 500mm	219	747	432	1474	300W	89.1713	356.00	**427.20**
1200 x 600mm	245	836	485	1654	300W	89.1714	398.00	**477.60**
1500 x 500mm	272	928	537	1832	300W	89.1737	413.00	**495.60**
1500 x 600mm	306	1044	603	2057	300W	89.1738	461.00	**553.20**
1800 x 500mm	325	1109	639	2179	450W	89.1715	453.00	**543.60**
1800 x 600mm	365	1245	718	2449	600W	89.1716	507.00	**608.40**

All Hurley models shown above are compatible with Element Type A, A+, B, D, E, F, and G

Matt Grey

Pictured 89.1719 Matt Grey

Matt Cappuccino

Pictured 89.0561 Matt Cappuccino

TECHNICAL INFORMATION

All measurements in Height by Width. Radiators that are electric only are restricted to the heat output of the elements. Element size can be increased to full capacity of rail if using element type B, D, E, F or G. For element types see pages 324-337. For matching valves see pages 338-353. For indirect heating systems only. Tappings are approx. 60mm and approx. 79mm off the wall. Price includes radiator and wall fixing sets, valves extra.

Designer Range

HELMSLEY

Rear fixing metal wall brackets

Pictured 89.0637 Matt Anthracite

Bar Dimensions (mm)

Horizontal Bars 70 x 11mm
Vertical Bars 30 x 30mm

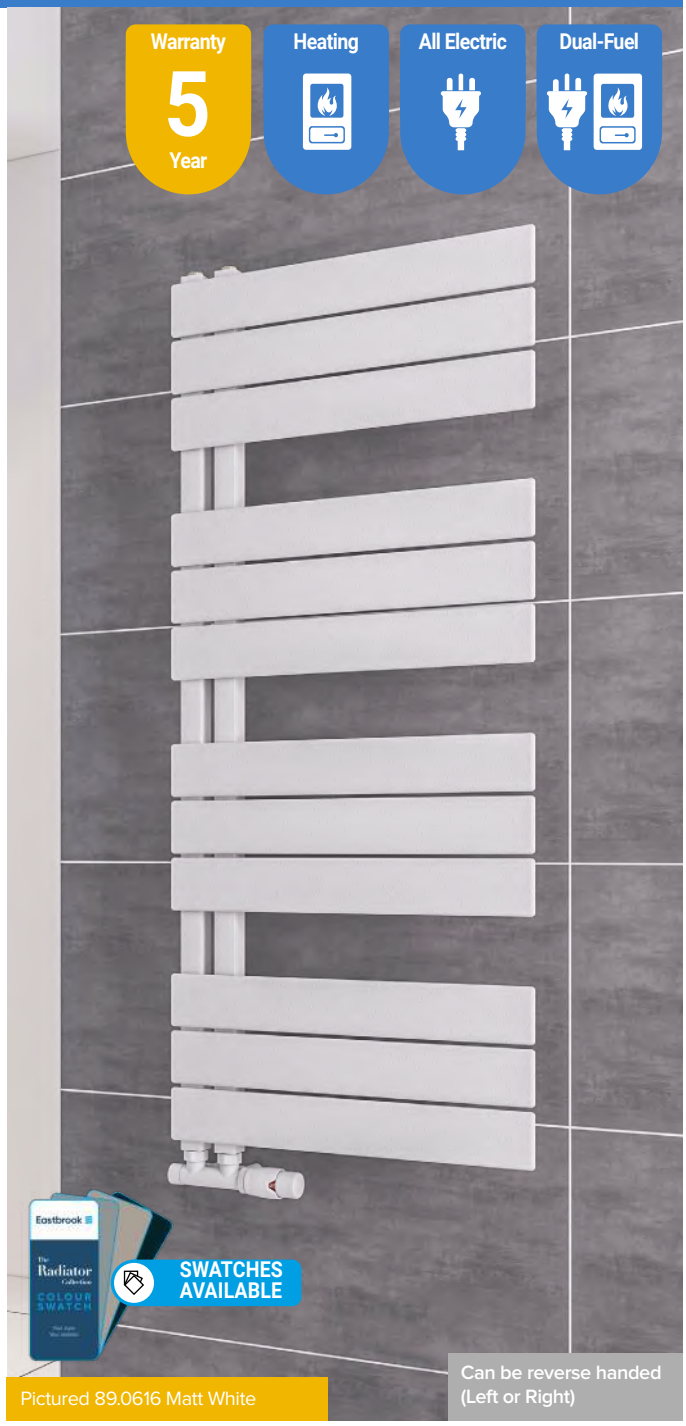

Pictured 89.0616 Matt White

Can be reverse handed (Left or Right)

One of the most popular models in the Designer Range. Available in a variety of colours to suit any bathroom. The generous surface area of the horizontal bars will let you experience the warmth. Helmsley is also reversible whilst fitting on the wall.

FEATURES

- 72 x 11mm. horizontal bars and 30 x 30mm. vertical profiles
- Rear fixing metal wall brackets
- Tested to BS EN 442 standards
- 5 colours available from stock
- Can be reverse handed (left or right)
- Can be single, dual fuel or all electric
- State-of-the-Art welding technology
- 5 Year Manufacturer's Warranty*

* With conditions

Technical Tables & Drawings
Page 384-385

Colours shown in images are subject to the limitations of the printing process and may appear different.

Round Vent Caps
Page 357

Designer Range

HELMSLEY

Helmsley Towel Rail - Matt White

Size H x W	Delta △T30 Watts	Delta △T30 BTU	Delta △T50 Watts	Delta △T50 BTU	Element Output	Code	£ Ex VAT	£ Inc VAT
800 x 500mm	183	625	347	1184	300W	89.0614	284.00	**340.80**
800 x 600mm	212	723	403	1375	300W	89.0615	314.00	**475.20**
1150 x 500mm	250	853	480	1637	300W	89.0616	392.00	**470.40**
1150 x 600mm	289	986	556	1896	450W	89.0617	436.00	**523.20**
1400 x 500mm	300	1023	581	1982	450W	89.0618	426.00	**511.20**
1400 x 600mm	347	1184	673	2295	600W	89.0619	474.00	**568.80**
1640 x 500mm	350	1194	684	2333	600W	89.0620	460.00	**552.00**
1640 x 600mm	405	1382	793	2705	600W	89.0621	516.00	**619.20**

Helmsley Towel Rail - Matt Anthracite

Size H x W	Delta △T30 Watts	Delta △T30 BTU	Delta △T50 Watts	Delta △T50 BTU	Element Output	Code	£ Ex VAT	£ Inc VAT
800 x 500mm	183	625	347	1184	300W	89.0630	284.00	**340.80**
800 x 600mm	212	723	403	1375	300W	89.0631	314.00	**376.80**
1150 x 500mm	250	853	480	1637	300W	89.0632	392.00	**470.40**
1150 x 600mm	289	986	556	1896	450W	89.0633	436.00	**523.20**
1400 x 500mm	300	1023	581	1982	450W	89.0634	426.00	**511.20**
1400 x 600mm	347	1184	673	2295	600W	89.0635	474.00	**568.80**
1640 x 500mm	350	1194	684	2333	600W	89.0636	460.00	**552.00**
1640 x 600mm	405	1382	793	2705	600W	89.0637	516.00	**619.20**

Helmsley Towel Rail - Matt Grey

Size H x W	Delta △T30 Watts	Delta △T30 BTU	Delta △T50 Watts	Delta △T50 BTU	Element Output	Code	£ Ex VAT	£ Inc VAT
800 x 500mm	183	625	347	1184	300W	89.0622	284.00	**340.80**
800 x 600mm	212	723	403	1375	300W	89.0623	314.00	**376.80**
1150 x 500mm	250	853	480	1637	300W	89.0624	392.00	**470.40**
1150 x 600mm	289	986	556	1896	450W	89.0625	436.00	**523.20**
1400 x 500mm	300	1023	581	1982	450W	89.0626	426.00	**511.20**
1400 x 600mm	347	1184	673	2295	600W	89.0627	474.00	**568.80**
1640 x 500mm	350	1194	684	2333	600W	89.0628	460.00	**552.00**
1640 x 600mm	405	1382	793	2705	600W	89.0629	516.00	**619.20**

Helmsley Towel Rail - Matt Black

Size H x W	Delta △T30 Watts	Delta △T30 BTU	Delta △T50 Watts	Delta △T50 BTU	Element Output	Code	£ Ex VAT	£ Inc VAT
800 x 500mm	183	625	347	1184	300W	89.0638	284.00	**340.80**
800 x 600mm	212	723	403	1375	300W	89.0639	314.00	**376.80**
1150 x 500mm	250	853	480	1637	300W	89.0640	392.00	**470.40**
1150 x 600mm	289	986	556	1896	450W	89.0641	436.00	**523.20**
1400 x 500mm	300	1023	581	1982	450W	89.0642	426.00	**511.20**
1400 x 600mm	347	1184	673	2295	600W	89.0643	474.00	**568.80**
1640 x 500mm	350	1194	684	2333	600W	89.0644	460.00	**552.00**
1640 x 600mm	405	1382	793	2705	600W	89.0645	516.00	**619.20**

All Helmsley models shown above are compatible with Element Type A, A+, B, D, E, F, and G

TECHNICAL INFORMATION

All measurements in Height by Width. Radiators that are electric only are restricted to the heat output of the elements. Element size can be increased to full capacity of rail if using element type B, D, E, F or G. For element types see pages 324-337. For matching valves see pages 338-353. For indirect heating systems only. Tappings are approx. 50mm and approx. 79mm off the wall. Price includes radiator and wall fixing sets, valves extra.

Matt White

Matt Grey

Matt Anthracite

Matt Black

Radiator Valves
Page 338-353

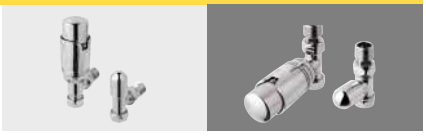

Designer Range

PLATANI

Warranty 5 Year | Heating | All Electric | Dual-Fuel

Rear fixing metal wall brackets

Pictured 89.1355 Chrome

Bar Dimensions (mm)

Horizontal Bars 40 x 20mm
Vertical Bars 30 x 30mm

Pictured 89.1344 Matt Anthracite

Can be reverse handed (Left or Right)

A stunning reversible style towel rail with evenly spaced horizontal bars. Available in 5 colours from stock including high qualiy chrome finish.

FEATURES

- 40 x 20mm. horizontal bars and 30 x 30mm. vertical profiles
- Rear fixing metal wall brackets
- Tested to BS EN 442 standards
- 5 colours available from stock
- Can be reverse handed (left or right)
- Can be single, dual fuel or all electric
- State-of-the-Art welding technology
- 5 Year Manufacturer's Warranty*

* With conditions

Technical Tables & Drawings
Page 384-385

Round Vent Caps
Page 357

Designer Range

PLATANI

Platani Towel Rail - Matt White

Size H x W	Delta △T30 Watts	Delta △T30 BTU	Delta △T50 Watts	Delta △T50 BTU	Element Output	Code	£ Ex VAT	£ Inc VAT
800 x 500mm	142	485	270	921	150W	89.1328	207.00	**248.40**
800 x 600mm	163	556	309	1054	150W	89.1329	231.00	**277.20**
1150 x 500mm	195	665	371	1266	150W	89.1330	285.00	**342.00**
1150 x 600mm	223	761	425	1450	150W	89.1331	321.00	**385.20**
1800 x 500mm	291	993	557	1900	450W	89.1332	361.00	**433.20**
1800 x 600mm	334	1139	639	2179	450W	89.1333	404.00	**484.80**

Platani Towel Rail - Matt Anthracite

Size H x W	Delta △T30 Watts	Delta △T30 BTU	Delta △T50 Watts	Delta △T50 BTU	Element Output	Code	£ Ex VAT	£ Inc VAT
800 x 500mm	142	485	270	921	150W	89.1340	207.00	**248.40**
800 x 600mm	163	556	309	1054	150W	89.1341	231.00	**277.20**
1150 x 500mm	195	665	371	1266	150W	89.1342	285.00	**342.00**
1150 x 600mm	223	761	425	1450	150W	89.1343	321.00	**385.20**
1800 x 500mm	291	993	557	1900	450W	89.1344	361.00	**433.20**
1800 x 600mm	334	1139	639	2179	450W	89.1345	404.00	**484.80**

Platani Towel Rail - Matt Grey

Size H x W	Delta △T30 Watts	Delta △T30 BTU	Delta △T50 Watts	Delta △T50 BTU	Element Output	Code	£ Ex VAT	£ Inc VAT
800 x 500mm	142	485	270	921	150W	89.1334	207.00	**248.40**
800 x 600mm	163	556	309	1054	150W	89.1335	231.00	**277.20**
1150 x 500mm	195	665	371	1266	150W	89.1336	285.00	**342.00**
1150 x 600mm	223	761	425	1450	150W	89.1337	321.00	**385.20**
1800 x 500mm	291	993	557	1900	450W	89.1338	361.00	**433.20**
1800 x 600mm	334	1139	639	2179	450W	89.1339	404.00	**484.80**

Platani Towel Rail - Matt Black

Size H x W	Delta △T30 Watts	Delta △T30 BTU	Delta △T50 Watts	Delta △T50 BTU	Element Output	Code	£ Ex VAT	£ Inc VAT
800 x 500mm	142	485	270	921	150W	89.1346	207.00	**248.40**
800 x 600mm	163	556	309	1054	150W	89.1347	231.00	**277.20**
1150 x 500mm	195	665	371	1266	150W	89.1348	285.00	**342.00**
1150 x 600mm	223	761	425	1450	150W	89.1349	321.00	**385.20**
1800 x 500mm	291	993	557	1900	450W	89.1350	361.00	**433.20**
1800 x 600mm	334	1139	639	2179	450W	89.1351	404.00	**484.80**

Platani Towel Rail - Chrome

Size H x W	Delta △T30 Watts	Delta △T30 BTU	Delta △T50 Watts	Delta △T50 BTU	Element Output	Code	£ Ex VAT	£ Inc VAT
800 x 500mm	88	301	171	584	100W	89.1352	264.00	**316.80**
800 x 600mm	101	345	195	665	100W	89.1353	297.00	**356.40**
1150 x 500mm	122	417	236	805	150W	89.1354	364.00	**436.80**
1150 x 600mm	139	474	270	921	150W	89.1355	409.00	**490.80**
1800 x 500mm	184	628	358	1221	150W	89.1356	507.00	**608.40**
1800 x 600mm	210	717	409	1395	300W	89.1357	566.00	**679.20**

Radiator Valves
Page 338-353

All Platani models shown above are compatible with Element Type A, A+, B, D, E, F, and G

TECHNICAL INFORMATION

All measurements in Height by Width. Radiators that are electric only are restricted to the heat output of the elements. Element size can be increased to full capacity of rail if using element type B, D, E, F or G. For element types see pages 324-337. For matching valves see pages 338-353. For indirect heating systems only. Tappings are approx. 50mm and approx. 80mm off the wall. Projection from wall is 115mm. Price includes radiator and wall fixing sets, valves extra.

Matt White

Matt Grey

Chrome

Matt Anthracite

Matt Black

Reversible Design

Designer Range

REINBACH

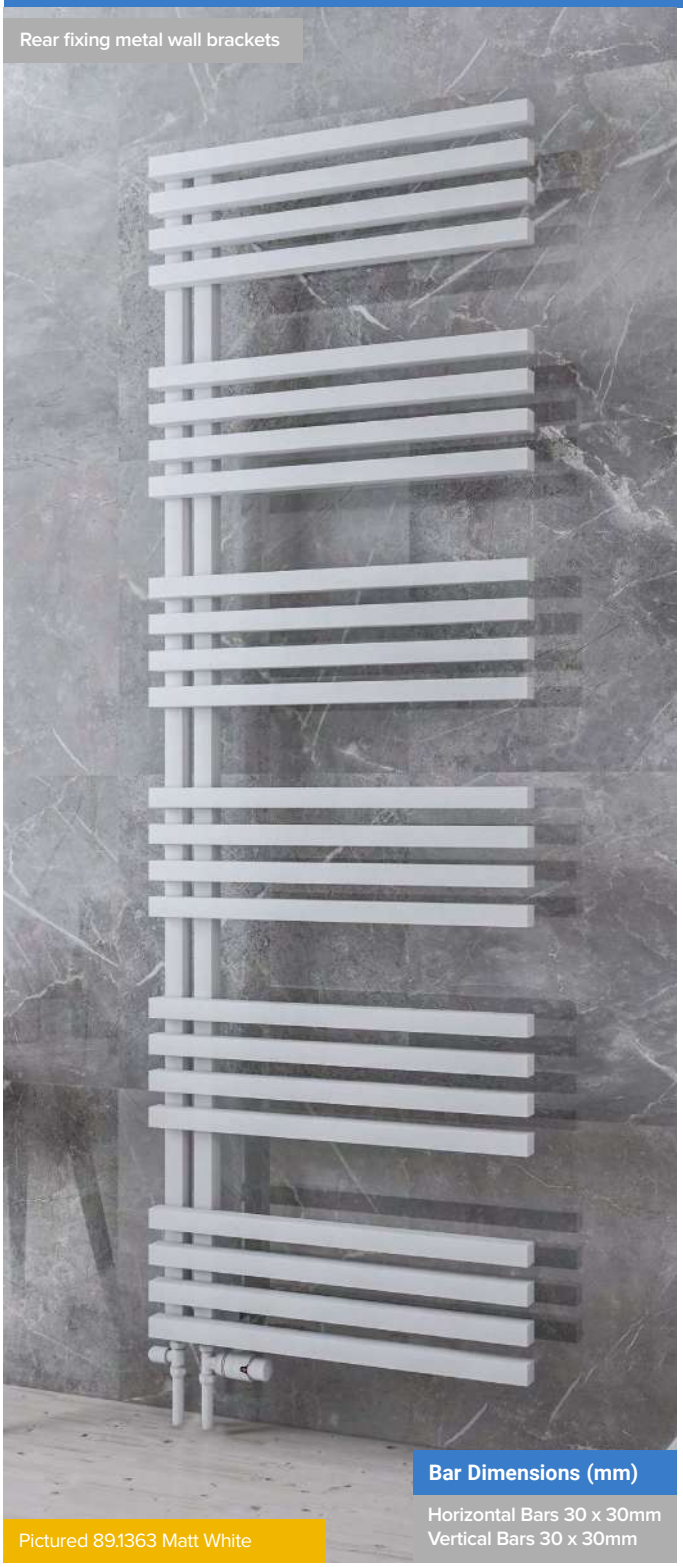

Pictured 89.1363 Matt White

Pictured 89.1384 Matt Black

Another reversible style design, Reinbach reaches the top levels of design with bulky horizontal bars that are capable of drying your largest towels.

FEATURES

- 30 x 30mm. horizontal bars and 30 x 30mm. vertical profiles
- Rear fixing metal wall brackets
- Tested to BS EN 442 standards
- 5 colours available from stock
- Can be reverse handed (left or right)
- Can be single, dual fuel or all electric
- State-of-the-Art welding technology
- 5 Year Manufacturer's Warranty*

* With conditions

Technical Tables & Drawings
Page 386-387

Pictured 89.1765 Matt Grey

Designer Range

REINBACH

Reinbach Towel Rail - Matt White

Size H x W	Delta △T30 Watts	Delta △T30 BTU	Delta △T50 Watts	Delta △T50 BTU	Element Output	Code	£ Ex VAT	£ Inc VAT
270 x 500mm	83	284	158	539	100W	89.1763	140.00	**168.00**
800 x 500mm	194	662	372	1269	150W	89.1358	246.00	**295.20**
800 x 600mm	228	778	439	1497	300W	89.1359	273.00	**327.60**
1200 x 500mm	273	931	530	1808	300W	89.1360	335.00	**402.00**
1200 x 600mm	322	1099	625	2132	300W	89.1361	377.00	**452.40**
1800 x 500mm	397	1354	780	2660	450W	89.1362	431.00	**517.20**
1800 x 600mm	468	1596	920	3138	600W	89.1363	480.00	**576.00**

Reinbach Towel Rail - Matt Grey

Size H x W	Delta △T30 Watts	Delta △T30 BTU	Delta △T50 Watts	Delta △T50 BTU	Element Output	Code	£ Ex VAT	£ Inc VAT
270 x 500mm	83	284	158	539	100W	89.1765	140.00	**168.00**
800 x 500mm	194	662	372	1269	150W	89.1370	246.00	**295.20**
800 x 600mm	228	778	439	1497	300W	89.1371	273.00	**327.60**
1200 x 500mm	273	931	530	1808	300W	89.1372	335.00	**402.00**
1200 x 600mm	322	1099	625	2132	300W	89.1373	377.00	**452.40**
1800 x 500mm	397	1354	780	2660	450W	89.1374	431.00	**517.20**
1800 x 600mm	468	1596	920	3138	600W	89.1375	480.00	**576.00**

Reinbach Towel Rail - Matt Cappuccino

Size H x W	Delta △T30 Watts	Delta △T30 BTU	Delta △T50 Watts	Delta △T50 BTU	Element Output	Code	£ Ex VAT	£ Inc VAT
270 x 500mm	83	284	158	539	100W	89.1764	140.00	**168.00**
800 x 500mm	194	662	372	1269	150W	89.1364	246.00	**295.20**
800 x 600mm	228	778	439	1497	300W	89.1365	273.00	**327.60**
1200 x 500mm	273	931	530	1808	300W	89.1366	335.00	**402.00**
1200 x 600mm	322	1099	625	2132	300W	89.1367	377.00	**452.40**
1800 x 500mm	397	1354	780	2660	450W	89.1368	431.00	**517.20**
1800 x 600mm	468	1596	920	3138	600W	89.1369	480.00	**576.00**

Reinbach Towel Rail - Matt Anthracite

Size H x W	Delta △T30 Watts	Delta △T30 BTU	Delta △T50 Watts	Delta △T50 BTU	Element Output	Code	£ Ex VAT	£ Inc VAT
270 x 500mm	83	284	158	539	100W	89.1766	140.00	**168.00**
800 x 500mm	194	662	372	1269	150W	89.1376	246.00	**295.20**
800 x 600mm	228	778	439	1497	300W	89.1377	273.00	**327.60**
1200 x 500mm	273	931	530	1808	300W	89.1378	335.00	**402.00**
1200 x 600mm	322	1099	625	2132	300W	89.1379	377.00	**452.40**
1800 x 500mm	397	1354	780	2660	450W	89.1380	431.00	**517.20**
1800 x 600mm	468	1596	920	3138	600W	89.1381	480.00	**576.00**

Reinbach Towel Rail - Matt Black

Size H x W	Delta △T30 Watts	Delta △T30 BTU	Delta △T50 Watts	Delta △T50 BTU	Element Output	Code	£ Ex VAT	£ Inc VAT
270 x 500mm	83	284	158	539	100W	89.1767	140.00	**168.00**
800 x 500mm	194	662	372	1269	150W	89.1382	246.00	**295.20**
800 x 600mm	228	778	439	1497	300W	89.1383	273.00	**327.60**
1200 x 500mm	273	931	530	1808	300W	89.1384	335.00	**402.00**
1200 x 600mm	322	1099	625	2132	300W	89.1385	377.00	**452.40**
1800 x 500mm	397	1354	780	2660	450W	89.1386	431.00	**517.20**
1800 x 600mm	468	1596	920	3138	600W	89.1387	480.00	**576.00**

Radiator Valves
Page 338-353

All Reinbach models shown above are compatible with Element Type A, A+, B, D, E, F, and G (except 270x500mm size Type A, A+, B)

TECHNICAL INFORMATION

All measurements in Height by Width. Radiators that are electric only are restricted to the heat output of the elements. Element size can be increased to full capacity of rail if using element type B, D, E, F or G. For element types see pages 324-337. For matching valves see pages 338-353. For indirect heating systems only. Tappings are approx. 50mm and approx. 80mm off the wall. Projection from wall is 125mm. Price includes radiator and wall fixing sets, valves extra.

Matt White

Matt Cappuccino

Matt Grey

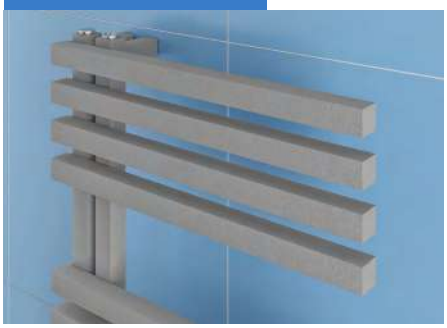

Matt Anthracite

Matt Black

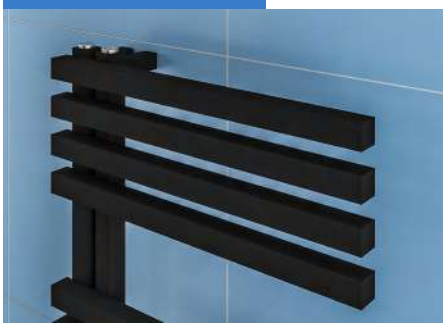

State-of-the-Art welding

Designer Range

MARLOW

Pictured 89.0526 Chrome

Pictured 89.0516 Matt Grey

Rear fixing metal wall brackets

State-of-the-Art welding meets large vertical and horizontal tubes in this model. Available in a variety of colours to suit any bathroom. The generous spacing between the horizontal tubes allows for maximum towel drying.

FEATURES

- 42mm diameter horizontal bars
- 42mm diameter vertical profiles
- Rear fixing metal wall brackets
- Tested to BS EN 442 standards
- 5 colours available from stock
- State-of-the-Art welding technology
- Not suitable for elements
- 5 Year Manufacturer's Warranty*

* With conditions

Technical Tables & Drawings
Page 386-387

Designer Range

MARLOW

Marlow Towel Rail - Matt White

Size H x W	Delta △T30 Watts	Delta △T30 BTU	Delta △T50 Watts	Delta △T50 BTU	Code	£ Ex VAT	£ Inc VAT
850 x 500mm	168	573	318	1085	89.0500	372.00	**446.40**
850 x 600mm	190	648	360	1228	89.0501	396.00	**475.20**
1150 x 500mm	225	768	426	1453	89.0502	459.00	**550.80**
1150 x 600mm	255	870	483	1648	89.0503	486.00	**583.20**
1750 x 500mm	338	1153	640	2183	89.0504	607.00	**728.40**
1750 x 600mm	383	1307	726	2476	89.0505	643.00	**771.60**

Marlow Towel Rail - Matt Grey

Size H x W	Delta △T30 Watts	Delta △T30 BTU	Delta △T50 Watts	Delta △T50 BTU	Code	£ Ex VAT	£ Inc VAT
850 x 500mm	168	573	318	1085	89.0512	372.00	**446.40**
850 x 600mm	190	648	360	1228	89.0513	396.00	**475.20**
1150 x 500mm	225	768	426	1453	89.0514	459.00	**550.80**
1150 x 600mm	255	870	483	1648	89.0515	486.00	**583.20**
1750 x 500mm	338	1153	640	2183	89.0516	607.00	**728.40**
1750 x 600mm	383	1307	726	2476	89.0517	643.00	**771.60**

Marlow Towel Rail - Matt Cappuccino

Size H x W	Delta △T30 Watts	Delta △T30 BTU	Delta △T50 Watts	Delta △T50 BTU	Code	£ Ex VAT	£ Inc VAT
850 x 500mm	168	573	318	1085	89.0518	409.00	**490.80**
850 x 600mm	190	648	360	1228	89.0519	434.00	**520.80**
1150 x 500mm	225	768	426	1453	89.0520	506.00	**607.20**
1150 x 600mm	255	870	483	1648	89.0521	534.00	**640.80**
1750 x 500mm	338	1153	640	2183	89.0522	669.00	**802.80**
1750 x 600mm	383	1307	726	2476	89.0523	710.00	**852.00**

Marlow Towel Rail - Matt Anthracite

Size H x W	Delta △T30 Watts	Delta △T30 BTU	Delta △T50 Watts	Delta △T50 BTU	Code	£ Ex VAT	£ Inc VAT
850 x 500mm	168	573	318	1085	89.0506	372.00	**446.40**
850 x 600mm	190	648	360	1228	89.0507	396.00	**475.20**
1150 x 500mm	225	768	426	1453	89.0508	459.00	**550.80**
1150 x 600mm	255	870	483	1648	89.0509	486.00	**583.20**
1750 x 500mm	338	1153	640	2183	89.0510	607.00	**728.40**
1750 x 600mm	383	1307	726	2476	89.0511	643.00	**771.60**

Marlow Towel Rail - Chrome

Size H x W	Delta △T30 Watts	Delta △T30 BTU	Delta △T50 Watts	Delta △T50 BTU	Code	£ Ex VAT	£ Inc VAT
850 x 500mm	106	362	203	693	89.0524	516.00	**619.20**
850 x 600mm	121	413	232	792	89.0525	546.00	**655.20**
1150 x 500mm	141	481	272	928	89.0526	636.00	**763.20**
1150 x 600mm	161	550	311	1061	89.0527	675.00	**810.00**
1750 x 500mm	213	727	411	1402	89.0528	843.00	**1011.60**
1750 x 600mm	243	829	469	1600	89.0529	893.00	**1071.60**

Matt White

Matt Grey

Matt Cappuccino

Matt Anthracite

Chrome

State-of-the-Art welding

Warranty **5** Year

Diameter (Ø) **42** MM Bars

Heating

TECHNICAL INFORMATION

All measurements in Height by Width. Not suitable for elements. For matching valves see pages 338-353. For indirect heating systems only. Tappings are approx. 82mm less than the width of the rail and approx. 85mm off the wall. Price includes radiator and wall fixing sets, valves extra.

Radiator Valves
Page 338-353

Round Vent Caps
Page 357

Designer Range

MARLOW E-STYLE

Warranty 5 Year

Diameter (Ø) 42 MM Bars

Heating

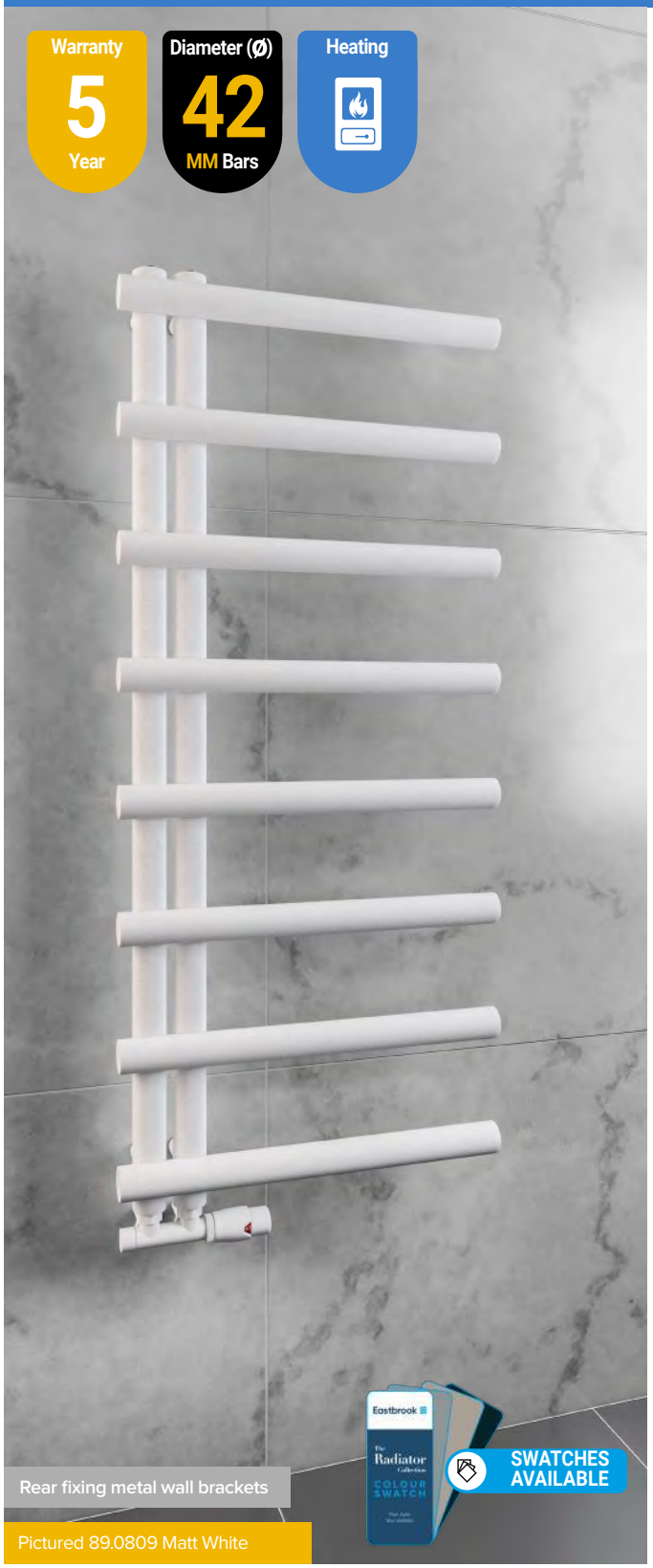

Rear fixing metal wall brackets

Pictured 89.0809 Matt White

Pictured 89.0835 Chrome

Can be reverse handed (Left or Right)

State-of-the-Art welding meets large vertical and horizontal tubes in this model. Available in a variety of colours to suit any bathroom. The generous spacing between the horizontal tubes allows for maximum towel drying.

FEATURES

- 42mm diameter horizontal bars
- 42mm diameter vertical profiles
- Rear fixing metal wall brackets
- Tested to BS EN 442 standards
- 5 colours available from stock
- Can be reverse handed (left or right)
- State-of-the-Art welding technology
- Not suitable for elements
- 5 Year Manufacturer's Warranty*

* With conditions

Technical Tables & Drawings
Page 386-387

Designer Range

MARLOW E-STYLE

Marlow E-Style Towel Rail - Matt White

Size H x W	Delta △T30 Watts	Delta △T30 BTU	Delta △T50 Watts	Delta △T50 BTU	Code	£ Ex VAT	£ Inc VAT
850 x 500mm	154	526	294	1003	89.0807	271.00	**325.20**
850 x 600mm	176	601	335	1143	89.0808	304.00	**364.80**
1150 x 500mm	206	703	394	1344	89.0809	373.00	**447.60**
1150 x 600mm	234	798	449	1532	89.0810	416.00	**499.20**
1750 x 500mm	310	1058	598	2040	89.0811	476.00	**571.20**
1750 x 600mm	354	1208	681	2323	89.0812	531.00	**637.20**

Marlow E-Style Towel Rail - Matt Grey

Size H x W	Delta △T30 Watts	Delta △T30 BTU	Delta △T50 Watts	Delta △T50 BTU	Code	£ Ex VAT	£ Inc VAT
850 x 500mm	154	526	294	1003	89.0819	271.00	**325.20**
850 x 600mm	176	601	335	1143	89.0820	304.00	**364.80**
1150 x 500mm	206	703	394	1344	89.0821	373.00	**447.60**
1150 x 600mm	234	798	449	1532	89.0822	416.00	**499.20**
1750 x 500mm	310	1058	598	2040	89.0823	476.00	**571.20**
1750 x 600mm	354	1208	681	2323	89.0824	531.00	**637.20**

Marlow E-Style Towel Rail- Matt Cappuccino

Size H x W	Delta △T30 Watts	Delta △T30 BTU	Delta △T50 Watts	Delta △T50 BTU	Code	£ Ex VAT	£ Inc VAT
850 x 500mm	154	526	294	1003	89.0825	271.00	**325.20**
850 x 600mm	176	601	335	1143	89.0826	304.00	**364.80**
1150 x 500mm	206	703	394	1344	89.0827	373.00	**447.60**
1150 x 600mm	234	798	449	1532	89.0828	416.00	**499.20**
1750 x 500mm	310	1058	598	2040	89.0829	476.00	**571.20**
1750 x 600mm	354	1208	681	2323	89.0830	531.00	**637.20**

Marlow E-Style Towel Rail - Matt Anthracite

Size H x W	Delta △T30 Watts	Delta △T30 BTU	Delta △T50 Watts	Delta △T50 BTU	Code	£ Ex VAT	£ Inc VAT
850 x 500mm	154	526	294	1003	89.0813	271.00	**325.20**
850 x 600mm	176	601	335	1143	89.0814	304.00	**364.80**
1150 x 500mm	206	703	394	1344	89.0815	373.00	**447.60**
1150 x 600mm	234	798	449	1532	89.0816	416.00	**499.20**
1750 x 500mm	310	1058	598	2040	89.0817	476.00	**571.20**
1750 x 600mm	354	1208	681	2323	89.0818	531.00	**637.20**

Marlow E-Style Towel Rail - Chrome

Size H x W	Delta △T30 Watts	Delta △T30 BTU	Delta △T50 Watts	Delta △T50 BTU	Code	£ Ex VAT	£ Inc VAT
850 x 500mm	98	335	191	652	89.0831	345.00	**414.00**
850 x 600mm	211	720	216	737	89.0832	386.00	**463.20**
1150 x 500mm	131	447	256	873	89.0833	476.00	**571.20**
1150 x 600mm	149	509	290	989	89.0834	531.00	**637.20**
1750 x 500mm	198	676	386	1317	89.0835	659.00	**790.80**
1750 x 600mm	224	764	437	1491	89.0836	739.00	**886.80**

Matt White

Matt Grey

Matt Cappuccino

Matt Anthracite

Chrome

State-of-the-Art welding

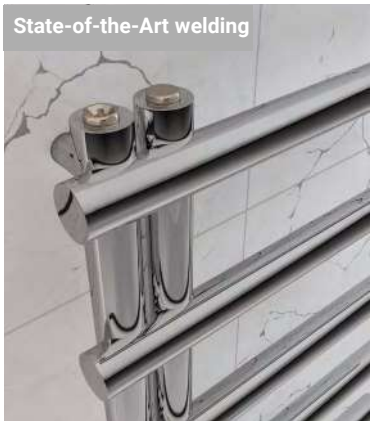

Warranty 5 Year

Diameter (Ø) 42 MM Bars

Heating

TECHNICAL INFORMATION

All measurements in Height by Width. Not suitable for elements. For matching valves see pages 338-353. For indirect heating systems only. Tappings are 50mm and approx. 85mm off the wall. Price includes radiator and wall fixing sets, valves extra.

Twin TRV's
Page 340

Tappings: 50mm

Round Vent Caps
Page 357

Designer Range

CONWY

Pictured 41.0712 Matt Anthracite

Pictured 41.0714 Chrome

A masterpiece for your bathroom or any other room. The square vertical bars at the top can be used as towel / bathrobe hangers and the 3 x robe hooks can be used to dry your towels too. This exceptional design is available in 4 colour options.

Matt White

Conwy Towel Rail - Matt White 1200mm Height

Width	Delta △T30 Watts	Delta △T30 BTU	Delta △T50 Watts	Delta △T50 BTU	Element Output	Element Type	Code	£ Ex VAT	£ Inc VAT
220mm	128	437	270	921	100W	A, A+, B, D, E, F, G	41.0711	144.00	**172.80**

Matt Black

Conwy Towel Rail - Matt Black 1200mm Height

Width	Delta △T30 Watts	Delta △T30 BTU	Delta △T50 Watts	Delta △T50 BTU	Element Output	Element Type	Code	£ Ex VAT	£ Inc VAT
220mm	128	437	270	921	100W	A, A+, B, D, E, F, G	41.0713	144.00	**172.80**

Matt Anthracite

Conwy Towel Rail - Matt Anthracite 1200mm Height

Width	Delta △T30 Watts	Delta △T30 BTU	Delta △T50 Watts	Delta △T50 BTU	Element Output	Element Type	Code	£ Ex VAT	£ Inc VAT
220mm	128	437	270	921	100W	A, A+, B, D, E, F, G	41.0712	144.00	**172.80**

Chrome

Conwy Towel Rail - Chrome 1200mm Height

Width	Delta △T30 Watts	Delta △T30 BTU	Delta △T50 Watts	Delta △T50 BTU	Element Output	Element Type	Code	£ Ex VAT	£ Inc VAT
220mm	75	256	144	492	100W	A, A+, B, D, E, F, G	41.0714	197.00	**236.40**

FEATURES
- 40 x 40mm vertical profiles
- Comes with pre-fitted 3 x robe hooks
- Rear fixing metal wall brackets
- Tested to BS EN 442 standards
- State-of-the-Art welding technology
- 5 Year Manufacturer's Warranty*

*With conditions

Technical Tables & Drawings
Page 388-389

TECHNICAL INFORMATION

All measurements in Height by Width. Radiators that are electric only are restricted to the heat output of the elements. Element size can be increased to full capacity of rail if using element type B, D, E, F or G. For element types see pages 324-337. For matching valves see pages 338-353. For indirect heating systems only. Tappings are 180mm and approx. 64-74mm off the wall. Tappings height difference 100mm. Projection from wall is 84-94mm. Price includes radiator and wall fixing sets, valves extra.

Matt White

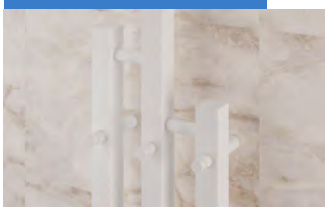

Matt Anthracite

Matt Black

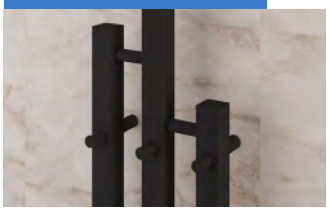

Chrome

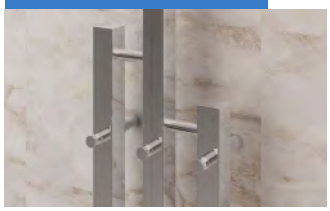

Designer Range

PORTCHESTER

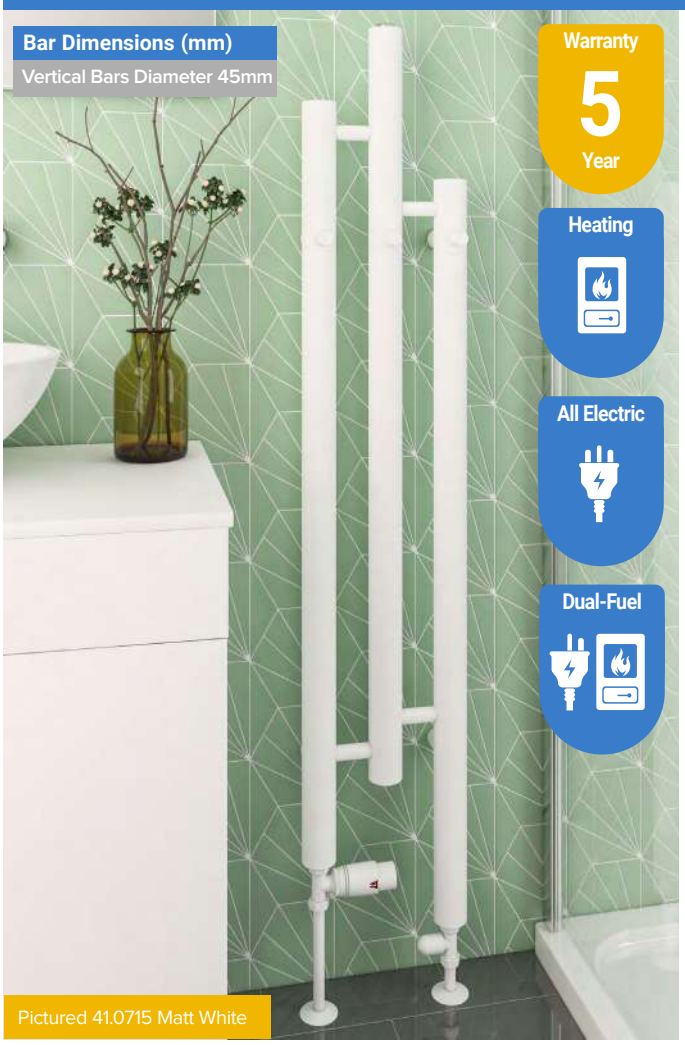

Pictured 41.0715 Matt White

Pictured 41.0718 Chrome

A masterpiece for your bathroom or any other room. The round vertical bars at the top can be used as towel / bathrobe hangers and the 3 x robe hooks can be used to dry your towels too. This exceptional design is available in 4 colour options.

Matt White

Portchester Towel Rail - Matt White 1200mm Height

Width	Delta △T30 Watts	Delta △T30 BTU	Delta △T50 Watts	Delta △T50 BTU	Element Output	Element Type	Code	£ Ex VAT	£ Inc VAT
225mm	121	413	227	775	100W	A, A+, B, D, E, F, G	41.0715	132.00	**158.40**

Matt Black

Portchester Towel Rail - Matt Black 1200mm Height

Width	Delta △T30 Watts	Delta △T30 BTU	Delta △T50 Watts	Delta △T50 BTU	Element Output	Element Type	Code	£ Ex VAT	£ Inc VAT
220mm	121	413	227	775	100W	A, A+, B, D, E, F, G	41.0717	132.00	**158.40**

Matt Anthracite

Portchester Towel Rail - Matt Anthracite 1200mm Height

Width	Delta △T30 Watts	Delta △T30 BTU	Delta △T50 Watts	Delta △T50 BTU	Element Output	Element Type	Code	£ Ex VAT	£ Inc VAT
225mm	121	413	227	775	100W	A, A+, B, D, E, F, G	41.0716	132.00	**158.40**

Chrome

Portchester Towel Rail - Chrome 1200mm Height

Width	Delta △T30 Watts	Delta △T30 BTU	Delta △T50 Watts	Delta △T50 BTU	Element Output	Element Type	Code	£ Ex VAT	£ Inc VAT
220mm	79	270	156	532	100W	A, A+, B, D, E, F, G	41.0718	181.00	**217.20**

FEATURES

- 45mm diameter vertical profiles
- Comes with pre-fitted 3 x robe hooks
- Rear fixing metal wall brackets
- Tested to BS EN 442 standards
- State-of-the-Art welding technology
- 5 Year Manufacturer's Warranty*

*With conditions

Technical Tables & Drawings
Page 388-389

TECHNICAL INFORMATION

All measurements in Height by Width. Radiators that are electric only are restricted to the heat output of the elements. Element size can be increased to full capacity of rail if using element type B, D, E, F or G. For element types see pages 324-337. For matching valves see pages 338-353. For indirect heating systems only. Tappings are 180mm and approx. 67-77mm off the wall. Tappings height difference 100mm. Projection from wall is 89-99mm. Price includes radiator and wall fixing sets, valves extra.

Matt White

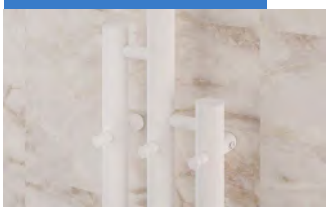

Matt Anthracite

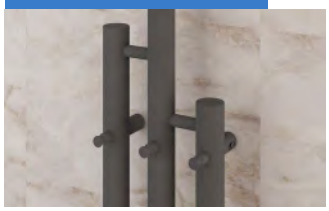

Matt Black

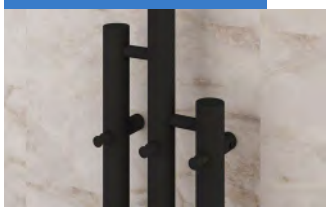

Chrome

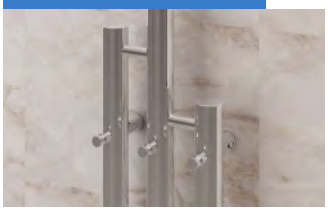

Designer Range

MURANO VERTICAL

Pictured 89.0908 Matt Grey

Pictured 89.0916 Matt Anthracite

Gloss White

Murano Vertical Radiator - Gloss White 1800mm Height

Width	Delta △T30 Watts	Delta △T30 BTU	Delta △T50 Watts	Delta △T50 BTU	Element Output	Element Type	Code	£ Ex VAT	£ Inc VAT
310mm	388	1324	749	2555	N/A	N/A	89.0901	451.00	**541.20**
410mm	533	1818	1029	3509	N/A	N/A	89.0902	600.00	**720.00**
510mm	683	2330	1319	4498	N/A	N/A	89.0903	749.00	**898.80**

Matt Anthracite

Murano Vertical Radiator - Matt Anthracite 1800mm Height

Width	Delta △T30 Watts	Delta △T30 BTU	Delta △T50 Watts	Delta △T50 BTU	Element Output	Element Type	Code	£ Ex VAT	£ Inc VAT
310mm	388	1324	749	2555	N/A	N/A	89.0915	451.00	**541.20**
410mm	533	1818	1029	3509	N/A	N/A	89.0916	600.00	**720.00**
510mm	683	2330	1319	4498	N/A	N/A	89.0917	749.00	**898.80**

Matt Grey

Murano Vertical Radiator - Matt Grey 1800mm Height

Width	Delta △T30 Watts	Delta △T30 BTU	Delta △T50 Watts	Delta △T50 BTU	Element Output	Element Type	Code	£ Ex VAT	£ Inc VAT
310mm	388	1324	749	2555	N/A	N/A	89.0908	451.00	**541.20**
410mm	533	1818	1029	3509	N/A	N/A	89.0909	600.00	**720.00**
510mm	683	2330	1319	4498	N/A	N/A	89.0910	749.00	**898.80**

Matt Black

Murano Vertical Radiator - Matt Black 1800mm Height

Width	Delta △T30 Watts	Delta △T30 BTU	Delta △T50 Watts	Delta △T50 BTU	Element Output	Element Type	Code	£ Ex VAT	£ Inc VAT
310mm	388	1324	749	2555	N/A	N/A	89.0922	451.00	**541.20**
410mm	533	1818	1029	3509	N/A	N/A	89.0923	600.00	**720.00**
510mm	683	2330	1319	4498	N/A	N/A	89.0924	749.00	**898.80**

Double vertical round bars and double horizontal bars create this eye catching radiator; Murano. Available in vertical horizontal styles with 4 finishes.

FEATURES

- 22mm diameter vertical bars
- Double tube on tube construction
- Tested to BS EN 442 standards
- 4 colours available from stock
- State-of-the-Art welding technology
- Not suitable for elements
- 5 Year Manufacturer's Warranty*

* With conditions

TECHNICAL INFORMATION

All measurements in Height by Width. Not suitable for elements. For matching valves see pages 338-353. For indirect heating systems only. Comes with built-in flow diverter. Tappings are width of the rail and approx. 50mm off the wall. Projection from wall is 86mm. Price includes radiator and wall fixing sets, valves extra.

Technical Tables & Drawings
Page 388-389

Designer Range

MURANO HORIZONTAL

Pictured 89.0897 Gloss White

Pictured 89.0920 Matt Black

Double profile construction

Gloss White

Murano Horizontal Radiator - Gloss White 600mm Height

Width	Delta △T30 Watts	Delta △T30 BTU	Delta △T50 Watts	Delta △T50 BTU	Element Output	Element Type	Code	£ Ex VAT	£ Inc VAT
800mm	377	1286	695	2370	300W	A, A+, B, D, F, G	89.0897	334.00	**400.80**
1000mm	482	1644	887	3025	450W	A, A+, B, D, F, G	89.0898	418.00	**501.60**
1200mm	589	2009	1084	3697	450W	A, A+, B, D, F, G	89.0899	501.00	**601.20**
1400mm	697	2377	1283	4376	600W	A+, B, D, F, G	89.0900	585.00	**702.00**

Matt Anthracite

Murano Horizontal Radiator - Matt Anthracite 600mm Height

Width	Delta △T30 Watts	Delta △T30 BTU	Delta △T50 Watts	Delta △T50 BTU	Element Output	Element Type	Code	£ Ex VAT	£ Inc VAT
800mm	377	1286	695	2370	300W	A, A+, B, D, F, G	89.0911	334.00	**400.80**
1000mm	482	1644	887	3025	450W	A, A+, B, D, F, G	89.0912	418.00	**501.60**
1200mm	589	2009	1084	3697	450W	A, A+, B, D, F, G	89.0913	501.00	**601.20**
1400mm	697	2377	1283	4376	600W	A+, B, D, F, G	89.0914	585.00	**702.00**

Matt Grey

Murano Vertical Radiator - Matt Grey 600mm Height

Width	Delta △T30 Watts	Delta △T30 BTU	Delta △T50 Watts	Delta △T50 BTU	Element Output	Element Type	Code	£ Ex VAT	£ Inc VAT
800mm	377	1286	695	2370	300W	A, A+, B, D, F, G	89.0904	334.00	**400.80**
1000mm	482	1644	887	3025	450W	A, A+, B, D, F, G	89.0905	418.00	**501.60**
1200mm	589	2009	1084	3697	450W	A, A+, B, D, F, G	89.0906	501.00	**601.20**
1400mm	697	2377	1283	4376	600W	A+, B, D, F, G	89.0907	585.00	**702.00**

Matt Black

Murano Horizontal Radiator - Matt Black 600mm Height

Width	Delta △T30 Watts	Delta △T30 BTU	Delta △T50 Watts	Delta △T50 BTU	Element Output	Element Type	Code	£ Ex VAT	£ Inc VAT
800mm	377	1286	695	2370	300W	A, A+, B, D, F, G	89.0918	334.00	**400.80**
1000mm	482	1644	887	3025	450W	A, A+, B, D, F, G	89.0919	418.00	**501.60**
1200mm	589	2009	1084	3697	450W	A, A+, B, D, F, G	89.0920	501.00	**601.20**
1400mm	697	2377	1283	4376	600W	A+, B, D, F, G	89.0921	585.00	**702.00**

FEATURES

- 22mm diameter horizontal bars
- Double tube on tube construction
- Tested to BS EN 442 standards
- 4 colours available from stock
- State-of-the-Art welding technology
- Can be single, dual fuel or all electric
- 5 Year Manufacturer's Warranty*

* With conditions

Technical Tables & Drawings
Page 388-389

TECHNICAL INFORMATION

All measurements in Height by Width. Radiators that are electric only are restricted to the heat output of the elements. Element size can be increased to full capacity of rail if using element type B, D, F or G. For element types see pages 324-337. For matching valves see pages 338-353. For indirect heating systems only. Tappings are approx. 45mm less than the width of the rail and approx. 81mm off the wall. Projection from wall is 117mm. Price includes radiator and wall fixing sets, valves extra.

Designer Range

RYTON

Pictured 61.0017 Chrome

Framed rectangular designer towel rail available in a variety of finishes to create a stylish focal point in any bathroom.

FEATURES
- Tested to BS EN 442 standards
- A brave alternative for a basic towel radiator
- Can be single, dual fuel or all electric (element can only be fitted on the right hand side)
- 5 Year Manufacturer's Warranty*

* With conditions

Technical Tables & Drawings
Page 390-391

Ryton Towel Rail - Matt White

Size H x W	Delta △T30 Watts	Delta △T30 BTU	Delta △T50 Watts	Delta △T50 BTU	Element Output	Code	£ Ex VAT	£ Inc VAT
800 x 500mm	158	539	299	1020	150W	61.0002	256.00	**307.20**
800 x 600mm	182	621	344	1174	150W	61.0003	280.00	**336.00**
1200 x 500mm	223	761	423	1443	150W	61.0004	320.00	**384.00**
1200 x 600mm	256	873	487	1661	150W	61.0005	349.00	**418.80**
1600 x 500mm	286	976	546	1862	300W	61.0006	408.00	**489.60**
1600 x 600mm	330	1126	629	2145	300W	61.0007	445.00	**534.00**

Ryton Towel Rail - Matt Anthracite

Size H x W	Delta △T30 Watts	Delta △T30 BTU	Delta △T50 Watts	Delta △T50 BTU	Element Output	Code	£ Ex VAT	£ Inc VAT
800 x 500mm	158	539	299	1020	150W	61.0008	256.00	**307.20**
800 x 600mm	182	621	344	1174	150W	61.0009	280.00	**336.00**
1200 x 500mm	223	761	423	1443	150W	61.0010	320.00	**384.00**
1200 x 600mm	256	873	487	1661	150W	61.0011	349.00	**418.80**
1600 x 500mm	286	976	546	1862	300W	61.0012	408.00	**489.60**
1600 x 600mm	330	1126	629	2145	300W	61.0013	445.00	**534.00**

Ryton Towel Rail - Chrome

Size H x W	Delta △T30 Watts	Delta △T30 BTU	Delta △T50 Watts	Delta △T50 BTU	Element Output	Code	£ Ex VAT	£ Inc VAT
800 x 500mm	101	345	191	652	100W	61.0014	360.00	**432.00**
800 x 600mm	115	393	218	744	100W	61.0015	403.00	**483.60**
1200 x 500mm	140	478	269	918	150W	61.0016	453.00	**543.60**
1200 x 600mm	159	543	306	1044	150W	61.0017	507.00	**608.40**
1600 x 500mm	180	614	351	1197	150W	61.0018	550.00	**660.00**
1600 x 600mm	205	700	399	1361	150W	61.0019	616.00	**739.20**

TECHNICAL INFORMATION

All measurements in Height by Width. Radiators that are electric only are restricted to the heat output of the elements. Element size can be increased to full capacity of rail if using element type B, D, E, F or G. Element can only be fitted on the right hand side. For element types see pages 324-337. For matching valves see pages 338-353. For indirect heating systems only. Tappings are approx. 30mm less than the width of the rail and approx. 75-90mm off the wall. Price includes radiator and wall fixing sets, valves extra.

All Ryton models shown above are compatible with Element Type A, A+, B, D, E, F, and G

Designer Range

KENILWORTH

Pictured 61.0032 Chrome

A contemporary take on a traditional towel rail. This round edged framed design available in a variety of colours will be sure to suit any bathroom.

FEATURES

- Tested to BS EN 442 standards
- A brave alternative for a basic towel radiator
- Can be single, dual fuel or all electric (element can only be fitted on the right hand side)
- 5 Year Manufacturer's Warranty*

* With conditions

Technical Tables & Drawings
Page 390-391

Kenilworth Towel Rail - Matt White

Size H x W	Delta △T30 Watts	Delta △T30 BTU	Delta △T50 Watts	Delta △T50 BTU	Element Output	Code	£ Ex VAT	£ Inc VAT
800 x 500mm	139	474	262	894	150W	62.0312	244.00	**292.80**
800 x 600mm	159	543	300	1023	150W	61.0021	266.00	**319.20**
1200 x 500mm	198	676	376	1283	150W	61.0022	309.00	**370.80**
1200 x 600mm	227	775	430	1467	150W	61.0023	337.00	**404.40**
1600 x 500mm	256	873	484	1651	300W	62.0316	397.00	**476.40**
1600 x 600mm	293	1000	554	1890	300W	61.0025	433.00	**519.60**

Kenilworth Towel Rail - Matt Anthracite

Size H x W	Delta △T30 Watts	Delta △T30 BTU	Delta △T50 Watts	Delta △T50 BTU	Element Output	Code	£ Ex VAT	£ Inc VAT
800 x 500mm	139	474	262	894	150W	61.0026	244.00	**292.80**
800 x 600mm	159	543	300	1023	150W	61.0027	266.00	**319.20**
1200 x 500mm	198	676	376	1283	150W	61.0028	309.00	**370.80**
1200 x 600mm	227	775	430	1467	150W	61.0029	337.00	**404.40**
1600 x 500mm	256	873	484	1651	300W	61.0030	397.00	**476.40**
1600 x 600mm	293	1000	554	1890	300W	61.0031	433.00	**519.60**

Kenilworth Towel Rail - Chrome

Size H x W	Delta △T30 Watts	Delta △T30 BTU	Delta △T50 Watts	Delta △T50 BTU	Element Output	Code	£ Ex VAT	£ Inc VAT
800 x 500mm	89	304	170	580	100W	61.0032	343.00	**411.60**
800 x 600mm	101	345	194	662	100W	62.0325	384.00	**460.80**
1200 x 500mm	129	440	247	843	150W	62.0326	437.00	**524.40**
1200 x 600mm	147	502	281	959	150W	61.0035	489.00	**586.80**
1600 x 500mm	168	573	322	1099	150W	62.0328	527.00	**632.40**
1600 x 600mm	191	652	367	1252	150W	62.0329	590.00	**708.00**

TECHNICAL INFORMATION

All measurements in Height by Width. Radiators that are electric only are restricted to the heat output of the elements. Element size can be increased to full capacity of rail if using element type B, D, E, F or G. Element can only be fitted on the right hand side. For element types see pages 324-337. For matching valves see pages 338-353. For indirect heating systems only. Tappings are approx. 32mm less than the width of the rail and approx. 76-91mm off the wall. Price includes radiator and wall fixing sets, valves extra.

All Kenilworth models shown above are compatible with Element Type A, A+, B, D, E, F, and G

Designer Range

LOXLEY

The Loxley range features contemporary clean lines. The square tubes and profiles gives this towel rail an ultra-modern look.

FEATURES
- Tested to BS EN 442 standards
- Modern adaption of a traditional design
- Concealed wall brackets
- Can be single, dual fuel** or all electric** (element can only be fitted on the right hand side)
- 5 Year Manufacturer's Warranty*

* With conditions
** Only certain sizes, see below table

Technical Tables & Drawings
Page 390-391

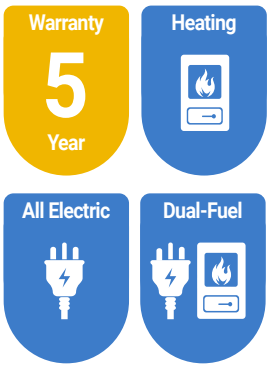

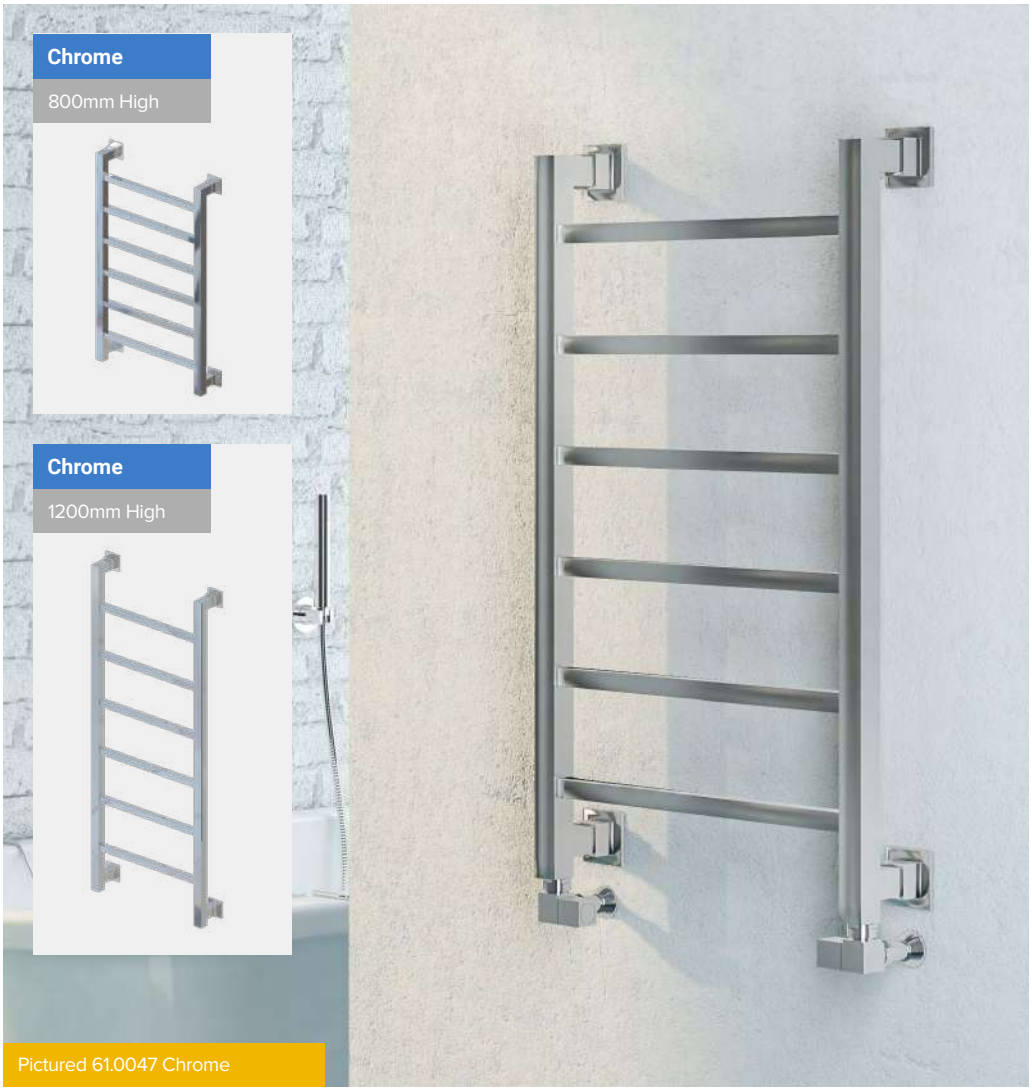

Pictured 61.0047 Chrome

Matt White

Loxley Towel Rail - Matt White 800mm Height

Width	Delta △T30 Watts	Delta △T30 BTU	Delta △T50 Watts	Delta △T50 BTU	Element Output	Element Type	Code	£ Ex VAT	£ Inc VAT
500mm	126	430	238	812	100W	A, A+, B, D, E, F, G	61.0038	406.00	**487.20**
600mm	142	485	268	914	100W	A, A+, B, D, E, F, G	61.0039	443.00	**531.60**

Loxley Towel Rail - Matt White 1200mm Height

Width	Delta △T30 Watts	Delta △T30 BTU	Delta △T50 Watts	Delta △T50 BTU	Element Output	Element Type	Code	£ Ex VAT	£ Inc VAT
500mm	186	635	355	1211	150W	A, A+, B, D, E, F, G	61.0040	447.00	**536.40**
600mm	209	713	399	1361	150W	A, A+, B, D, E, F, G	61.0041	488.00	**585.60**

Matt Anthracite

Loxley Towel Rail - Matt Anthracite 800mm Height

Width	Delta △T30 Watts	Delta △T30 BTU	Delta △T50 Watts	Delta △T50 BTU	Element Output	Element Type	Code	£ Ex VAT	£ Inc VAT
500mm	126	430	238	812	100W	A, A+, B, D, E, F, G	61.0042	406.00	**487.20**
600mm	142	485	268	914	100W	A, A+, B, D, E, F, G	61.0043	443.00	**531.60**

Loxley Towel Rail - Matt Anthracite 1200mm Height

Width	Delta △T30 Watts	Delta △T30 BTU	Delta △T50 Watts	Delta △T50 BTU	Element Output	Element Type	Code	£ Ex VAT	£ Inc VAT
500mm	186	635	355	1211	150W	A, A+, B, D, E, F, G	61.0044	447.00	**536.40**
600mm	209	713	399	1361	150W	A, A+, B, D, E, F, G	61.0045	488.00	**585.60**

Chrome

Loxley Towel Rail - Chrome 800mm Height

Width	Delta △T30 Watts	Delta △T30 BTU	Delta △T50 Watts	Delta △T50 BTU	Element Output	Element Type	Code	£ Ex VAT	£ Inc VAT
500mm	85	290	161	550	N/A	N/A	61.0046	460.00	**552.00**
600mm	96	328	183	625	N/A	N/A	61.0047	515.00	**618.00**

Loxley Towel Rail - Chrome 1200mm Height

Width	Delta △T30 Watts	Delta △T30 BTU	Delta △T50 Watts	Delta △T50 BTU	Element Output	Element Type	Code	£ Ex VAT	£ Inc VAT
500mm	119	406	229	781	100W	A, A+, B, D, E, F, G	61.0048	518.00	**621.60**
600mm	135	461	260	887	100W	A, A+, B, D, E, F, G	61.0049	580.00	**696.00**

TECHNICAL INFORMATION

All measurements in Height by Width. Radiators that are electric only are restricted to the heat output of the elements. Element size can be increased to full capacity of rail if using element type B, D, E, F or G. Element can only be fitted on the right hand side. For element types see pages 324-337. For matching valves see pages 338-353. For indirect heating systems only. Tappings are approx. 59mm less than the width of the rail and approx. 76mm off the wall. Price includes radiator and wall fixing sets, valves extra.

Concealed Wall Brackets

Concealed Wall Brackets

Designer Range

Pictured 61.0056 Matt Anthracite

ESHTON

A fresh take on the traditional towel rail. The Eshton range features both round tubes and profiles for a complete contemporary look.

FEATURES

- Tested to BS EN 442 standards
- Modern adaption of a traditional design
- Concealed wall brackets
- Can be single, dual fuel or all electric (element can only be fitted on the right hand side)
- 5 Year Manufacturer's Warranty*

* With conditions

Technical Tables & Drawings
Page 390-391

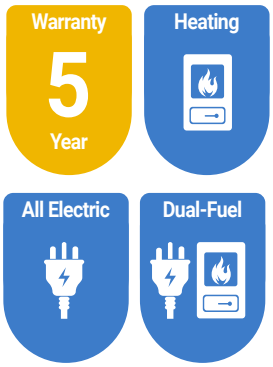

Matt White

Eshton Towel Rail - Matt White 800mm Height

Width	Delta △T30 Watts	Delta △T30 BTU	Delta △T50 Watts	Delta △T50 BTU	Element Output	Element Type	Code	£ Ex VAT	£ Inc VAT
500mm	117	399	221	754	150W	A, A+, B, D, E, F, G	61.0050	368.00	**441.60**
600mm	132	451	250	853	150W	A, A+, B, D, E, F, G	61.0051	402.00	**482.40**

Eshton Towel Rail - Matt White 1200mm Height

Width	Delta △T30 Watts	Delta △T30 BTU	Delta △T50 Watts	Delta △T50 BTU	Element Output	Element Type	Code	£ Ex VAT	£ Inc VAT
500mm	176	601	333	1136	150W	A, A+, B, D, E, F, G	62.0344	411.00	**493.20**
600mm	198	676	376	1283	150W	A, A+, B, D, E, F, G	61.0053	448.00	**537.60**

Matt Anthracite

Eshton Towel Rail - Matt Anthracite 800mm Height

Width	Delta △T30 Watts	Delta △T30 BTU	Delta △T50 Watts	Delta △T50 BTU	Element Output	Element Type	Code	£ Ex VAT	£ Inc VAT
500mm	117	399	221	754	150W	A, A+, B, D, E, F, G	61.0054	368.00	**441.60**
600mm	132	451	250	853	150W	A, A+, B, D, E, F, G	61.0055	402.00	**482.40**

Eshton Towel Rail - Matt Anthracite 1200mm Height

Width	Delta △T30 Watts	Delta △T30 BTU	Delta △T50 Watts	Delta △T50 BTU	Element Output	Element Type	Code	£ Ex VAT	£ Inc VAT
500mm	176	601	333	1136	150W	A, A+, B, D, E, F, G	61.0056	411.00	**493.20**
600mm	198	676	376	1283	150W	A, A+, B, D, E, F, G	61.0057	448.00	**537.60**

Chrome

Eshton Towel Rail - Chrome 800mm Height

Width	Delta △T30 Watts	Delta △T30 BTU	Delta △T50 Watts	Delta △T50 BTU	Element Output	Element Type	Code	£ Ex VAT	£ Inc VAT
500mm	77	263	145	495	100W	A, A+, B, D, F, G	61.0058	425.00	**510.00**
600mm	90	307	170	580	100W	A, A+, B, D, F, G	61.0059	476.00	**571.20**

Eshton Towel Rail - Chrome 1200mm Height

Width	Delta △T30 Watts	Delta △T30 BTU	Delta △T50 Watts	Delta △T50 BTU	Element Output	Element Type	Code	£ Ex VAT	£ Inc VAT
500mm	114	389	219	747	150W	A, A+, B, D, E, F, G	61.0060	484.00	**580.80**
600mm	134	457	257	877	150W	A, A+, B, D, E, F, G	61.0061	532.00	**638.40**

TECHNICAL INFORMATION

All measurements in Height by Width. Radiators that are electric only are restricted to the heat output of the elements. Element size can be increased to full capacity of rail if using element type B, D, E, F or G. Element can only be fitted on the right hand side. For element types see pages 324-337. For matching valves see pages 338-353. For indirect heating systems only. Tappings are approx. 59mm less than the width of the rail and approx. 77mm off the wall. Price includes radiator and wall fixing sets, valves extra.

Concealed Wall Brackets

Concealed Wall Brackets

Designer Range

RUBANO VERTICAL

Pictured 81.0058 Gloss White

A modern take on the traditional radiator. The range features larger profiles for a more contemporary look. Available in gloss white, matt anthracite and a range of sizes makes the Rubano an ideal radiator for any household room.

Gloss White

Rubano Vertical - Gloss White 1800mm Height

Width	Delta △T30 Watts	Delta △T30 BTU	Delta △T50 Watts	Delta △T50 BTU	Element Output	Element Type	Code	£ Ex VAT	£ Inc VAT
383mm	580	1978	1122	3827	300W	A, A+, C*, H*	81.0058	428.00	**513.60**
503mm	773	2636	1496	5102	600W	A+, C**, H**	81.0059	569.00	**682.80**

Matt Anthracite

Rubano Vertical - Matt Anthracite 1800mm Height

Width	Delta △T30 Watts	Delta △T30 BTU	Delta △T50 Watts	Delta △T50 BTU	Element Output	Element Type	Code	£ Ex VAT	£ Inc VAT
383mm	580	1978	1122	3827	300W	A, A+, C*, H*	81.0064	436.00	**523.20**
503mm	773	2636	1496	5102	600W	A+, C**, H**	81.0065	580.00	**696.00**

*Only 300W Element can be used. ** Only 900W Element can be used.

Rubano Radiator Feet

Description	Code	£ Ex VAT	£ Inc VAT
Rubano Radiator Feet (pair) White	81.0066	37.00	**44.40**
Rubano Radiator Feet (pair) Matt Anthracite	81.0067	37.00	**44.40**

Round Vent Caps
Page 357

Designer Range

RUBANO HORIZONTAL

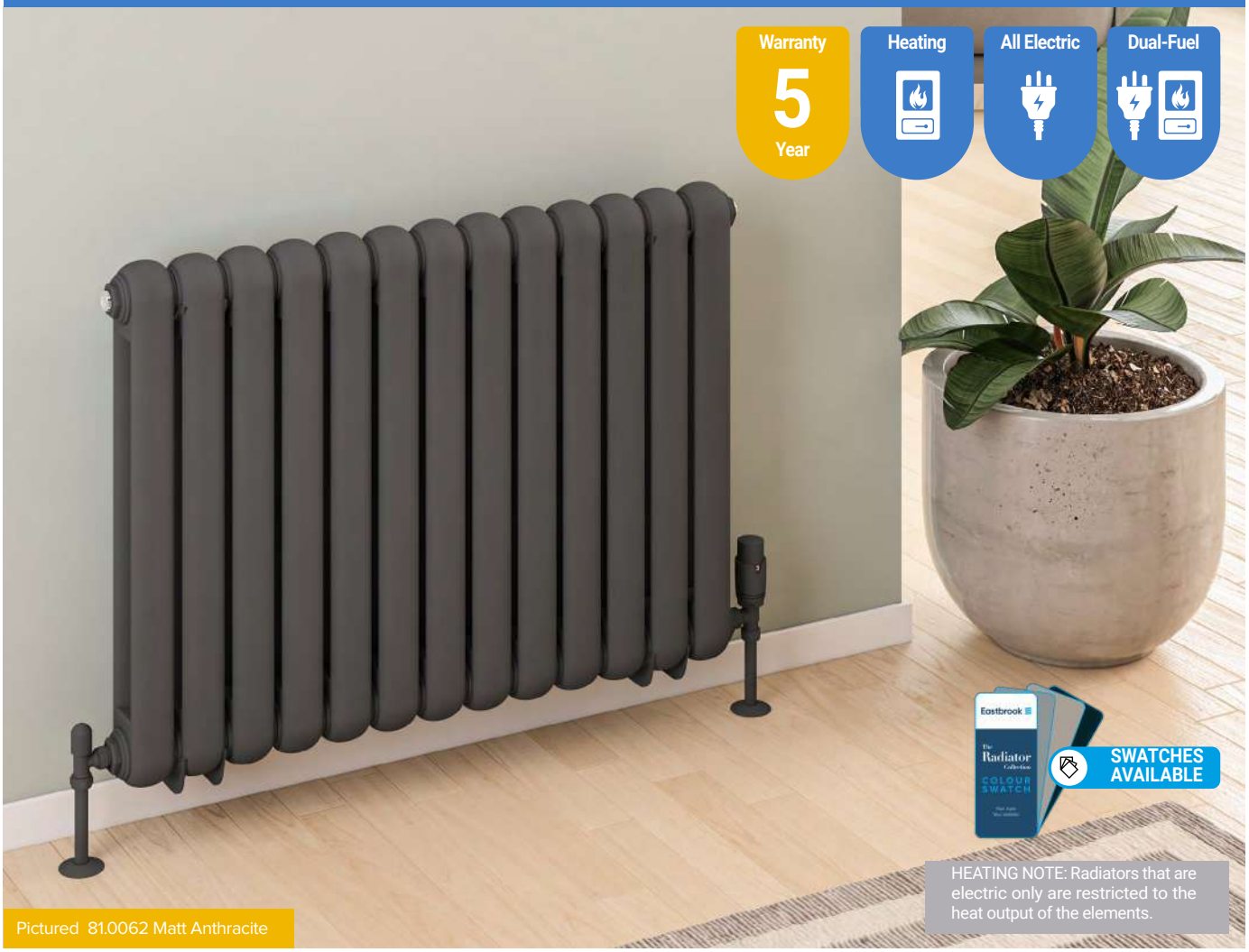

Pictured 81.0062 Matt Anthracite

A modern take on the traditional radiator. The range features larger profiles for a more contemporary look. Available in gloss white, matt anthracite and a range of sizes makes the Rubano an ideal radiator for any household room.

Gloss White

Rubano Horizontal - Gloss White 600mm Height

Width	Delta △T30 Watts	Delta △T30 BTU	Delta △T50 Watts	Delta △T50 BTU	Element Output	Element Type	Code	£ Ex VAT	£ Inc VAT
383mm	199	679	386	1317	300W	A, A+, C*, H*	81.0054	174.00	**208.80**
623mm	331	1129	643	2193	450W	A, A+, C, E**, H	81.0055	284.00	**340.80**
803mm	430	1467	836	2851	600W	A, A+, C, E, H	81.0056	367.00	**440.40**
1103mm	596	2033	1157	3946	900W	A, A+, C, H	81.0057	506.00	**607.20**

*Element Type C and H only 300W can be used. **Element Type E only 300W can be used.

Matt Anthracite

Rubano Horizontal - Matt Anthracite 600mm Height

Width	Delta △T30 Watts	Delta △T30 BTU	Delta △T50 Watts	Delta △T50 BTU	Element Output	Element Type	Code	£ Ex VAT	£ Inc VAT
383mm	199	679	386	1317	300W	A, A+, C*, H*	81.0060	177.00	**212.40**
623mm	331	1129	643	2193	450W	A, A+, C, E**, H	81.0061	287.00	**344.40**
803mm	430	1467	836	2851	600W	A, A+, C, E, H	81.0062	375.00	**450.00**
1103mm	596	2033	1157	3946	900W	A, A+, C, H	81.0063	516.00	**619.20**

*Element Type C and H only 300W can be used. **Element Type E only 300W can be used.

Round Vent Caps
Page 357

FEATURES

- Tested to BS EN 442 standards
- Modern style column radiator
- Radiator feet option available to get the modern look
- Does not require flow diverter
- Can be single, dual fuel or all electric
- 5 Year Manufacturer's Warranty*

* With conditions

Technical Tables & Drawings
Page 392-393

TECHNICAL INFORMATION

All measurements in Height by Width. Radiators that are electric only are restricted to the heat output of the elements. Element size can be increased to full capacity of rail if using element type C, E or H. For element types see pages 324-337. For matching valves see pages 338-353. For indirect heating systems only. Tappings are approx. the width of the rail and 74mm off the wall. Price includes radiator and wall fixing sets, valves extra.

Optional Extra: Rubano Radiator Feet

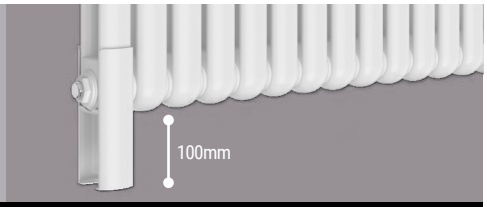

Rubano Radiator Feet

Description	Code	£ Ex VAT	£ Inc VAT
Rubano Radiator Feet (pair) White	81.0066	37.00	**44.40**
Rubano Radiator Feet (pair) Matt Anthracite	81.0067	37.00	**44.40**

Designer Range

ROWSHAM VERTICAL

Pictured 89.0103 Matt White

Bar Dimensions (mm)

Vertical Bars 40 x 20mm

Pictured 89.0109 Matt Anthracite with 89.0112 Chrome Towel Hanger

The Rowsham Vertical is a designer radiator with stunning clean lines that complement any room.

FEATURES

- 40 x 20mm vertical bars
- Comes with pre-fitted flow diverter
- Tested to BS EN 442 standards
- 5 Year manufacturer's warranty*
- Not suitable for elements

* With conditions

Technical Tables & Drawings

Page 392-393

Matt White

Rowsham Vertical - Matt White 1800mm Height

Width	Delta △T30		Delta △T50		Code	£ Ex VAT	£ Inc VAT
	Watts	BTU	Watts	BTU			
300mm	419	1429	822	2804	89.0102	350.00	**420.00**
380mm	545	1859	1069	3646	89.0103	448.00	**537.60**
500mm	739	2520	1451	4948	89.0104	461.00	**553.20**

Matt Anthracite

Rowsham Vertical - Matt Anthracite 1800mm Height

Width	Delta △T30		Delta △T50		Code	£ Ex VAT	£ Inc VAT
	Watts	BTU	Watts	BTU			
300mm	419	1429	822	2804	89.0109	350.00	**420.00**
380mm	545	1859	1069	3646	89.0110	448.00	**537.60**
500mm	739	2520	1451	4948	89.0111	461.00	**553.20**

Designer Range

ROWSHAM VERTICAL

Pictured 89.0111 Matt Anthracite

Bar Dimensions (mm)

Vertical Bars 40 x 20mm

COMPLETE THE LOOK

Radiator Valves
Page: 338-353

Round Vent Caps

Page 357

TECHNICAL INFORMATION

All measurements in Height by Width. Not suitable for elements. For matching valves see pages 338-353. For indirect heating systems only. Tappings are the width of the rail and approx. 54mm off the wall. Price includes radiator and wall fixing sets, valves extra.

Warranty 5 Year

Heating

Optional Extra - Towel Hanger - Chrome

Description	Code	£ Ex VAT	£ Inc VAT
Towel Hanger 300mm	89.0112	74.00	**88.80**

Compatible with Vertical and Horizontal Radiators. Can be fitted after installation (vertical radiators only).

Designer Range

ROWSHAM HORIZONTAL

Pictured 89.0098 Matt White

Bar Dimensions (mm)

Vertical Bars 40 x 20mm

Pictured 89.0107 Matt Anthracite

The Rowsham Horizontal is a designer radiator with stunning clean lines that complement any room.

Matt White

Rowsham Horizontal - Matt White 600mm Height

Width	Delta △T30		Delta △T50		Code	£ Ex VAT	£ Inc VAT
	Watts	BTU	Watts	BTU			
580mm	265	904	505	1723	89.0098	324.00	**388.80**
780mm	369	1259	702	2394	89.0099	363.00	**435.60**
980mm	475	1620	905	3087	89.0100	415.00	**498.00**
1180mm	584	1992	1113	3796	89.0101	482.00	**578.40**

Matt Anthracite

Rowsham Horizontal - Matt Anthracite 600mm Height

Width	Delta △T30		Delta △T50		Code	£ Ex VAT	£ Inc VAT
	Watts	BTU	Watts	BTU			
580mm	265	904	505	1723	89.0105	324.00	**388.80**
780mm	369	1259	702	2394	89.0106	363.00	**435.60**
980mm	475	1620	905	3087	89.0107	415.00	**498.00**
1180mm	584	1992	1113	3796	89.0108	482.00	**578.40**

FEATURES

- 40 x 20mm vertical bars
- Comes with pre-fitted flow diverter
- Tested to BS EN 442 standards
- 5 Year manufacturer's warranty*
- Not suitable for elements

* With conditions

Round Vent Caps
Page 357

TECHNICAL INFORMATION

All measurements in Height by Width. Not suitable for elements. For matching valves see pages 338-353. For indirect heating systems only. Tappings are the width of the rail and approx. 54mm off the wall. Price includes radiator and wall fixing sets, valves extra.

Warranty 5 Year

Heating

Optional Extra - Towel Hanger - Chrome

Description	Code	£ Ex VAT	£ Inc VAT
Towel Hanger 300mm	89.0112	74.00	**88.80**

Compatible with Vertical and Horizontal Radiators. Must be fitted before installation (horizontal radiators only).

Technical Tables & Drawings
Page 392-393

Designer Range

ROWSHAM TOWEL RAIL

Pictured 89.1393 Matt White

Rear fixing metal wall brackets

Technical Tables & Drawings
Page 394-395

Pictured 89.1396 Matt Anthracite

Bar Dimensions (mm)

Horizontal Bars 40 x 20mm

The Rowsham Towel Rail is a designer towel rail with stunning clean lines that has also high heat output.

Matt White

Rowsham Towel Rail - Matt White 800mm Height

Width	Delta △T30 Watts	Delta △T30 BTU	Delta △T50 Watts	Delta △T50 BTU	Element Output	Element Type	Code	£ Ex VAT	£ Inc VAT
500mm	250	853	465	1586	300W	A, A+, B, D, E, F, G	89.1388	228.00	**273.60**
600mm	270	921	502	1712	300W	A, A+, B, D, E, F, G	89.1389	263.00	**315.60**

Rowsham Towel Rail - Matt White 1200mm Height

Width	Delta △T30 Watts	Delta △T30 BTU	Delta △T50 Watts	Delta △T50 BTU	Element Output	Element Type	Code	£ Ex VAT	£ Inc VAT
500mm	371	1266	695	2370	450W	A, A+, B, D, E, F, G	89.1390	375.00	**450.00**
600mm	401	1368	750	2558	600W	A, A+, B, D, E, F, G	89.1391	434.00	**520.80**

Rowsham Towel Rail - Matt White 1800mm Height

Width	Delta △T30 Watts	Delta △T30 BTU	Delta △T50 Watts	Delta △T50 BTU	Element Output	Element Type	Code	£ Ex VAT	£ Inc VAT
500mm	562	1917	1061	3619	600W	A, A+, B, D, E, F, G	89.1392	519.00	**622.80**
600mm	606	2067	1145	3905	750W	A, A+, B, D, E, F, G	89.1393	601.00	**721.20**

Matt Anthracite

Rowsham Towel Rail - Matt Anthracite 800mm Height

Width	Delta △T30 Watts	Delta △T30 BTU	Delta △T50 Watts	Delta △T50 BTU	Element Output	Element Type	Code	£ Ex VAT	£ Inc VAT
500mm	250	853	465	1586	300W	A, A+, B, D, E, F, G	89.1394	228.00	**273.60**
600mm	270	921	502	1712	300W	A, A+, B, D, E, F, G	89.1395	263.00	**315.60**

Rowsham Towel Rail - Matt Anthracite 1200mm Height

Width	Delta △T30 Watts	Delta △T30 BTU	Delta △T50 Watts	Delta △T50 BTU	Element Output	Element Type	Code	£ Ex VAT	£ Inc VAT
500mm	371	1266	695	2370	450W	A, A+, B, D, E, F, G	89.1396	375.00	**450.00**
600mm	401	1368	750	2558	600W	A, A+, B, D, E, F, G	89.1397	434.00	**520.80**

Rowsham Towel Rail - Matt Anthracite 1800mm Height

Width	Delta △T30 Watts	Delta △T30 BTU	Delta △T50 Watts	Delta △T50 BTU	Element Output	Element Type	Code	£ Ex VAT	£ Inc VAT
500mm	562	1917	1061	3619	600W	A, A+, B, D, E, F, G	89.1398	519.00	**622.80**
600mm	606	2067	1145	3905	750W	A, A+, B, D, E, F, G	89.1399	601.00	**721.20**

TECHNICAL INFORMATION

All measurements in Height by Width. Radiators that are electric only are restricted to the heat output of the elements. Element size can be increased to full capacity of rail if using element type B, D, E, F or G. For element types see pages 324-337. For matching valves see pages 338-353. For indirect heating systems only. Tappings are approx. 32mm less than the width of the rail and 83mm off the wall. Projection from wall is 139mm. Price includes radiator and wall fixing sets, valves extra.

Round Vent Caps
Page 357

Designer Range

WINGRAVE FLAT PANEL

No more heavy & bulky panel radiators! A minimalist cover has been added to the Wingrave Towel Rail with built-in middle connection option. Also the stylish towel hangers will allow you to use this radiator in your bathroom as well as other rooms. Available in 2 heights and 3 colours.

FEATURES
- Tested to BS EN 442 standards
- Wingrave towel rail with with flat panel cover
- Rear fixing metal wall brackets
- Comes with 50mm middle connection in addition to standard side connections
- Dual fuel connection without T piece, element fits in either left or right bottom side connection
- Blanking plug and air vent are at the rear of the radiator
- Can only be installed vertically
- Can be single or dual fuel, or all electric
- 5 Year Manufacturer's Warranty*

*With conditions

Technical Tables & Drawings
Page 394-395

Warranty 5 Year | Heating | All Electric | Dual-Fuel

Designer Range

WINGRAVE FLAT PANEL

Gloss White

Matt Anthracite

Matt Black

Rear View - Hidden air vent and blanking plug

TECHNICAL INFORMATION

All measurements in Height by Width. Radiators that are electric only are restricted to the heat output of the elements. Element size can be increased to full capacity of rail if using element type B, D, E, F or G. For element types see pages 324-337. For matching valves see pages 338-353. For indirect heating systems only. Middle connection is 50mm. and and approx. 73mm off the wall. Side connections are 55mm less than the width of the rail and approx. 73mm off the wall. Price includes radiator and wall fixing sets, valves extra.

Gloss White

Wingrave Flat Panel Radiator - Gloss White 1200mm Height

Width	Delta △T30 Watts*	Delta △T30 BTU*	Delta △T50 Watts*	Delta △T50 BTU*	Element Output	Element Type	Code	£ Ex VAT	£ Inc VAT
310mm	196	669	374	1276	150W	A, A+, B, D, E, F, G	89.1455	260.00	**312.00**
410mm	247	843	471	1607	300W	A, A+, B, D, E, F, G	89.1456	273.00	**327.60**
510mm	298	1017	569	1941	300W	A, A+, B, D, E, F, G	89.1457	297.00	**356.40**
610mm	350	1194	667	2275	450W	A, A+, B, D, E, F, G	89.1458	321.00	**385.20**

Gloss White

Wingrave Flat Panel Radiator - Gloss White 1800mm Height

Width	Delta △T30 Watts*	Delta △T30 BTU*	Delta △T50 Watts*	Delta △T50 BTU*	Element Output	Element Type	Code	£ Ex VAT	£ Inc VAT
310mm	289	986	551	1879	150W	A, A+, B, D, E, F, G	89.1451	315.00	**378.00**
410mm	364	1242	694	2367	300W	A, A+, B, D, E, F, G	89.1452	340.00	**408.00**
510mm	439	1497	837	2855	300W	A, A+, B, D, E, F, G	89.1453	380.00	**456.00**
610mm	514	1753	980	3342	450W	A, A+, B, D, E, F, G	89.1454	420.00	**504.00**

Matt Anthracite

Wingrave Flat Panel Radiator - Matt Anthracite 1200mm Height

Width	Delta △T30 Watts*	Delta △T30 BTU*	Delta △T50 Watts*	Delta △T50 BTU*	Element Output	Element Type	Code	£ Ex VAT	£ Inc VAT
310mm	196	669	374	1276	150W	A, A+, B, D, E, F, G	89.1467	281.00	**337.20**
410mm	247	843	471	1607	300W	A, A+, B, D, E, F, G	89.1468	296.00	**355.20**
510mm	298	1017	569	1941	300W	A, A+, B, D, E, F, G	89.1469	321.00	**385.20**
610mm	350	1194	667	2275	450W	A, A+, B, D, E, F, G	89.1470	345.00	**414.00**

Matt Anthracite

Wingrave Flat Panel Radiator - Matt Anthracite 1800mm Height

Width	Delta △T30 Watts*	Delta △T30 BTU*	Delta △T50 Watts*	Delta △T50 BTU*	Element Output	Element Type	Code	£ Ex VAT	£ Inc VAT
310mm	289	986	551	1879	150W	A, A+, B, D, E, F, G	89.1463	341.00	**409.20**
410mm	364	1242	694	2367	300W	A, A+, B, D, E, F, G	89.1464	368.00	**441.60**
510mm	439	1497	837	2855	300W	A, A+, B, D, E, F, G	89.1465	410.00	**492.00**
610mm	514	1753	980	3342	450W	A, A+, B, D, E, F, G	89.1466	454.00	**544.80**

Matt Black

Wingrave Flat Panel Radiator - Matt Black 1200mm Height

Width	Delta △T30 Watts*	Delta △T30 BTU*	Delta △T50 Watts*	Delta △T50 BTU*	Element Output	Element Type	Code	£ Ex VAT	£ Inc VAT
310mm	196	669	374	1276	150W	A, A+, B, D, E, F, G	89.1479	281.00	**337.20**
410mm	247	843	471	1607	300W	A, A+, B, D, E, F, G	89.1480	296.00	**355.20**
510mm	298	1017	569	1941	300W	A, A+, B, D, E, F, G	89.1481	321.00	**385.20**
610mm	350	1194	667	2275	450W	A, A+, B, D, E, F, G	89.1482	345.00	**414.00**

* Further heat output information available on eastbrooktrade.com **E&OA**

Matt Black

Wingrave Flat Panel Radiator - Matt Black 1800mm Height

Width	Delta △T30 Watts*	Delta △T30 BTU*	Delta △T50 Watts*	Delta △T50 BTU*	Element Output	Element Type	Code	£ Ex VAT	£ Inc VAT
310mm	289	986	551	1879	150W	A, A+, B, D, E, F, G	89.1475	341.00	**409.20**
410mm	364	1242	694	2367	300W	A, A+, B, D, E, F, G	89.1476	368.00	**441.60**
510mm	439	1497	837	2855	300W	A, A+, B, D, E, F, G	89.1477	410.00	**492.00**
610mm	514	1753	980	3342	450W	A, A+, B, D, E, F, G	89.1478	454.00	**544.80**

* Further heat output information available on eastbrooktrade.com **E&OA**

WINGRAVE FLAT PANEL TOWEL HANGERS

Towel Hanger - Gloss White

Size	Code	£ Ex VAT	£ Inc VAT
310mm	89.1459	50.00	**60.00**
410mm	89.1460	54.00	**64.80**
510mm	89.1461	61.00	**73.20**
610mm	89.1462	68.00	**81.60**

Towel Hanger - Matt Anthracite

Size	Code	£ Ex VAT	£ Inc VAT
310mm	89.1471	50.00	**60.00**
410mm	89.1472	54.00	**64.80**
510mm	89.1473	61.00	**73.20**
610mm	89.1474	68.00	**81.60**

Towel Hanger - Matt Black

Size	Code	£ Ex VAT	£ Inc VAT
310mm	89.1483	50.00	**60.00**
410mm	89.1484	54.00	**64.80**
510mm	89.1485	61.00	**73.20**
610mm	89.1486	68.00	**81.60**

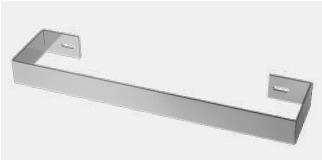

Towel Hanger - Chrome

Size	Code	£ Ex VAT	£ Inc VAT
310mm	89.1487	50.00	**60.00**
410mm	89.1488	54.00	**64.80**
510mm	89.1489	61.00	**73.20**
610mm	89.1490	68.00	**81.60**

TECHNICAL INFORMATION

Vertical Radiators:

12000mm height radiators come with 2 towel hanger locations, with a maximum of 2 towel hangers - all widths; 310, 410, 510 and 610mm. 1800mm height radiators come with 3 towel hanger locations, with a maximum of 3 towel hangers - all widths; 310, 410, 510 and 610mm. Wingrave Flat Panel Towel Hangers are compatible with 1200mm & 1800mm height Wingrave Flat Panel Radiators. Towel hanger material is mild steel.

Must be fitted before installation.

Designer Range

TUNSTALL VERTICAL

Bar Dimensions (mm)

Vertical Bars 50 x 25mm

Pictured 89.0008 Chrome & 101.0035 Towel Hanger

Warranty 5 Year

Heating

Create a fresh new look with this elegant designer radiator which will suit any room in the house. Available in four colour finishes.

FEATURES

- 50 x 25mm vertical bars
- Comes with pre-fitted flow diverter
- Tested to BS EN 442 standards
- 5 Year manufacturer's warranty*
- Not suitable for elements

* With conditions

Technical Tables & Drawings
Page 394-395

Round Vent Caps
Page 357

Robe Hooks
Page 355

Designer Range

TUNSTALL VERTICAL

Tunstall Vertical Radiator - Matt White

Size H x W	Delta △T30 Watts	Delta △T30 BTU	Delta △T50 Watts	Delta △T50 BTU	Code	£ Ex VAT	£ Inc VAT
1800x 280mm	235	802	459	1566	89.0001	167.00	**200.40**
1800x 350mm	303	1034	592	2019	89.1620	199.00	**238.80**
1800x 420mm	373	1272	729	2486	89.0005	229.00	**274.80**
1800x 490mm	445	1518	870	2967	89.1624	278.00	**333.60**
1800x 560mm	518	1767	1013	3455	89.1628	323.00	**387.60**
1800x 630mm	593	2023	1159	3953	89.0009	359.00	**430.80**

Tunstall Vertical Radiator - Matt Anthracite

Size H x W	Delta △T30 Watts	Delta △T30 BTU	Delta △T50 Watts	Delta △T50 BTU	Code	£ Ex VAT	£ Inc VAT
1800x 280mm	235	802	459	1566	89.0002	167.00	**200.40**
1800x 350mm	303	1034	592	2019	89.1621	199.00	**238.80**
1800x 420mm	373	1272	729	2486	89.0006	229.00	**274.80**
1800x 490mm	445	1518	870	2967	89.1625	278.00	**333.60**
1800x 560mm	518	1767	1013	3455	89.1629	323.00	**387.60**
1800x 630mm	593	2023	1159	3953	89.0010	359.00	**430.80**

Tunstall Vertical Radiator - Matt Black

Size H x W	Delta △T30 Watts	Delta △T30 BTU	Delta △T50 Watts	Delta △T50 BTU	Code	£ Ex VAT	£ Inc VAT
1800x 280mm	235	802	459	1566	89.0003	167.00	**200.40**
1800x 350mm	303	1034	592	2019	89.1622	199.00	**238.80**
1800x 420mm	373	1272	729	2486	89.0007	229.00	**274.80**
1800x 490mm	445	1518	870	2967	89.1626	278.00	**333.60**
1800x 560mm	518	1767	1013	3455	89.1630	323.00	**387.60**
1800x 630mm	593	2023	1159	3953	89.0011	359.00	**430.80**

Tunstall Vertical Radiator - Chrome

Size H x W	Delta △T30 Watts	Delta △T30 BTU	Delta △T50 Watts	Delta △T50 BTU	Code	£ Ex VAT	£ Inc VAT
1800x 280mm	133	454	254	867	89.0004	387.00	**464.40**
1800x 350mm	177	604	337	1150	89.1623	418.00	**501.60**
1800x 420mm	222	758	424	1446	89.0008	448.00	**537.60**
1800x 490mm	270	921	515	1757	89.1627	497.00	**596.40**
1800x 560mm	320	1092	609	2077	89.1631	548.00	**657.60**
1800x 630mm	371	1266	707	2411	89.0012	592.00	**710.40**

TECHNICAL INFORMATION

All measurements in Height by Width. For matching valves see pages 338-353. Not suitable for elements. For indirect heating systems only. Tappings are the width of the rail and approx. 52mm off the wall. Price includes radiator and wall fixing sets, valves extra.

Matt White

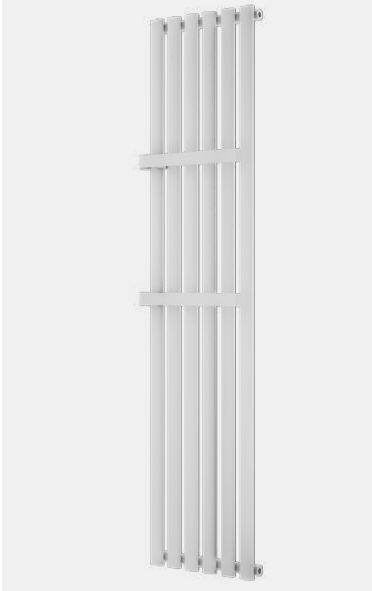

Matt Anthracite

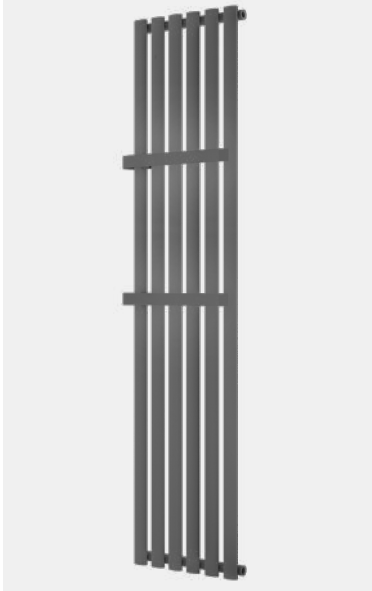

Matt Black

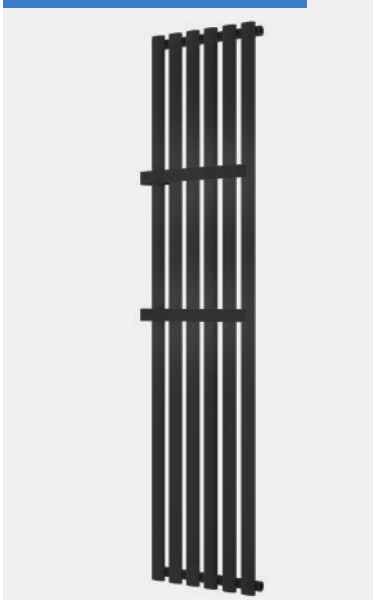

Chrome

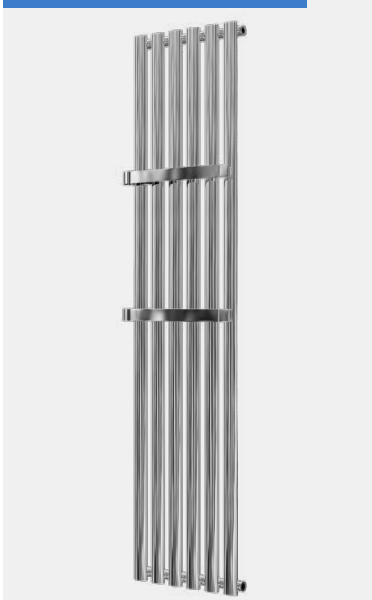

Vertical Tunstall Towel Hangers

The Vertical Tunstall Towel Hangers can be fitted on both sides of the radiator (as left hand or right hand). Must be fitted before installation!

Towel Hanger - Matt White

Size	Code	£ Ex VAT	£ Inc VAT
280mm	101.0028	60.00	**72.00**
350mm	89.1741	65.00	**78.00**
420mm	101.0032	73.00	**87.60**
490mm	89.1742	77.00	**92.40**
560mm	89.1743	80.00	**96.00**
630mm	101.0036	84.00	**100.80**

Towel Hanger - Matt Anthracite

Size	Code	£ Ex VAT	£ Inc VAT
280mm	101.0029	60.00	**72.00**
350mm	89.1744	65.00	**78.00**
420mm	101.0033	73.00	**87.60**
490mm	89.1745	77.00	**92.40**
560mm	89.1746	80.00	**96.00**
630mm	101.0037	84.00	**100.80**

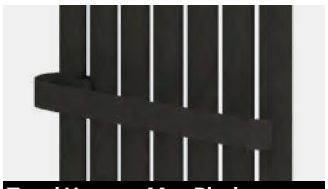

Towel Hanger - Matt Black

Size	Code	£ Ex VAT	£ Inc VAT
280mm	101.0030	60.00	**72.00**
350mm	89.1747	65.00	**78.00**
420mm	101.0034	73.00	**87.60**
490mm	89.1748	77.00	**92.40**
560mm	89.1749	80.00	**96.00**
630mm	101.0038	84.00	**100.80**

Towel Hanger - Chrome

Size	Code	£ Ex VAT	£ Inc VAT
280mm	101.0031	65.00	**78.00**
350mm	89.1750	72.00	**86.40**
420mm	101.0035	79.00	**94.80**
490mm	89.1751	84.00	**100.80**
560mm	89.1752	87.00	**104.40**
630mm	101.0039	90.00	**108.00**

Designer Range

TUNSTALL HORIZONTAL

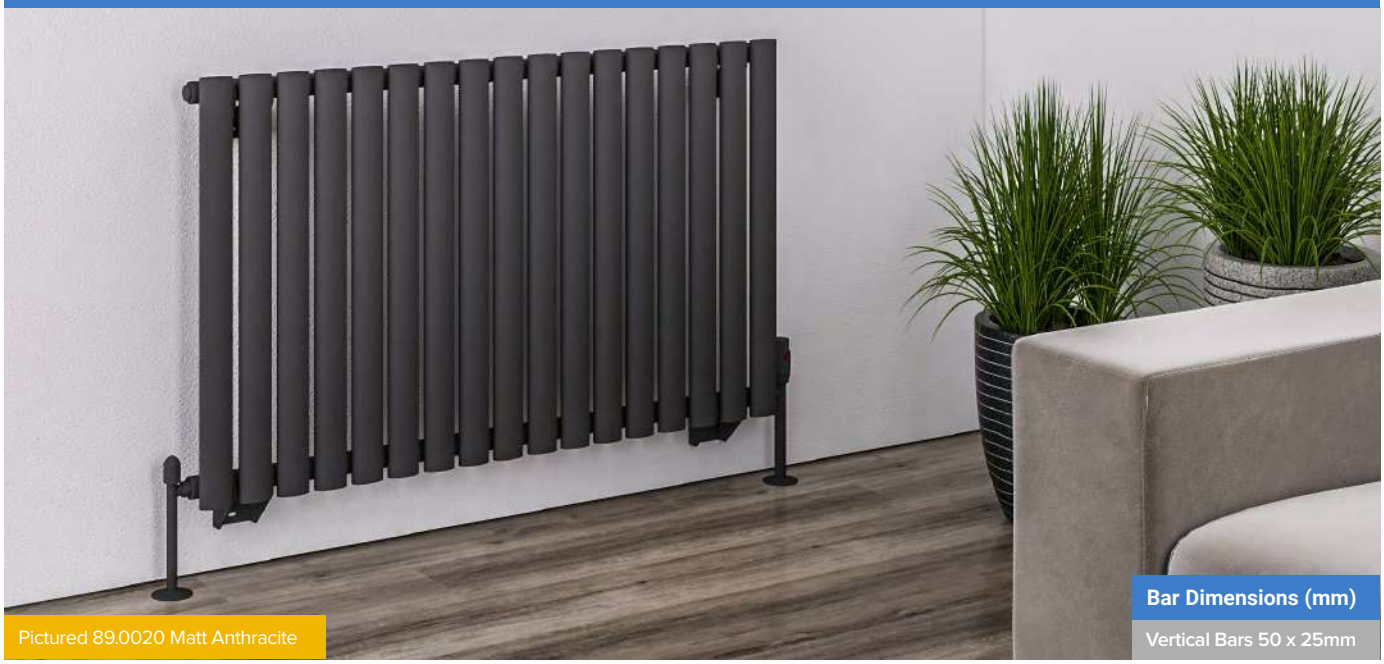

Pictured 89.0020 Matt Anthracite

Bar Dimensions (mm)
Vertical Bars 50 x 25mm

The eliptical shape of these tubes will provide a stylish focus to any room. Available in three colours.

FEATURES
- 50 x 25mm vertical bars
- Comes with pre-fitted flow diverter
- Tested to BS EN 442 standards
- 5 Year manufacturer's warranty*
- Not suitable for elements

* With conditions

Technical Tables & Drawings
Page 396-397

Matt White

Tunstall Horizontal Radiator - Matt White 600mm Height

Width	Delta △T30 Watts	Delta △T30 BTU	Delta △T50 Watts	Delta △T50 BTU	Element Output	Element Type	Code	£ Ex VAT	£ Inc VAT
471mm	161	550	311	1061	N/A	N/A	89.1632	137.00	**164.40**
589mm	207	706	402	1371	N/A	N/A	89.0013	153.00	**183.60**
648mm	231	788	448	1528	N/A	N/A	89.1635	167.00	**200.40**
825mm	304	1037	590	2012	N/A	N/A	89.0016	207.00	**248.40**
1002mm	380	1296	737	2514	N/A	N/A	89.0019	252.00	**302.40**
1061mm	406	1385	787	2684	N/A	N/A	89.1638	271.00	**325.20**
1179mm	458	1562	887	3025	N/A	N/A	89.0022	296.00	**355.20**

Warranty 5 Year

Heating

Round Vent Caps
Page 357

TECHNICAL INFORMATION

All measurements in Height by Width. Heat output based on ▲T60˚C. For matching valves see pages 338-353. Not suitable for elements. For indirect heating systems only. Tappings are the width of the rail and approx. 52mm off the wall. Price includes radiator and wall fixing sets, valves extra.

Matt Anthracite

Tunstall Horizontal Radiator - Matt Anthracite 600mm Height

Width	Delta △T30 Watts	Delta △T30 BTU	Delta △T50 Watts	Delta △T50 BTU	Element Output	Element Type	Code	£ Ex VAT	£ Inc VAT
471mm	161	550	311	1061	N/A	N/A	89.1633	137.00	**164.40**
589mm	207	706	402	1371	N/A	N/A	89.0014	153.00	**183.60**
648mm	231	788	448	1528	N/A	N/A	89.1636	167.00	**200.40**
825mm	304	1037	590	2012	N/A	N/A	89.0017	207.00	**248.40**
1002mm	380	1296	737	2514	N/A	N/A	89.0020	252.00	**302.40**
1061mm	406	1385	787	2684	N/A	N/A	89.1639	271.00	**325.20**
1179mm	458	1562	887	3025	N/A	N/A	89.0023	296.00	**355.20**

Matt Black

Tunstall Horizontal Radiator - Matt Black 600mm Height

Width	Delta △T30 Watts	Delta △T30 BTU	Delta △T50 Watts	Delta △T50 BTU	Element Output	Element Type	Code	£ Ex VAT	£ Inc VAT
471mm	161	550	311	1061	N/A	N/A	89.1634	137.00	**164.40**
589mm	207	706	402	1371	N/A	N/A	89.0015	153.00	**183.60**
648mm	231	788	448	1528	N/A	N/A	89.1637	167.00	**200.40**
825mm	304	1037	590	2012	N/A	N/A	89.0018	207.00	**248.40**
1002mm	380	1296	737	2514	N/A	N/A	89.0021	252.00	**302.40**
1061mm	406	1385	787	2684	N/A	N/A	89.1640	271.00	**325.20**
1179mm	458	1562	887	3025	N/A	N/A	89.0024	296.00	**355.20**

Horizontal Tunstall Towel Hangers

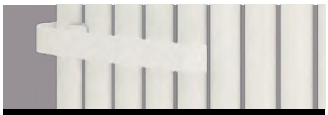

Towel Hanger - Matt White

Size	Code	£ Ex VAT	£ Inc VAT
330mm	101.0040	70.00	**84.00**
589mm	101.0044	84.00	**100.80**

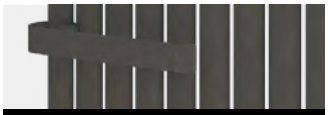

Towel Hanger - Matt Anthracite

Size	Code	£ Ex VAT	£ Inc VAT
330mm	101.0041	70.00	**84.00**
589mm	101.0045	84.00	**100.80**

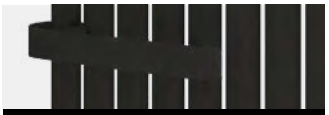

Towel Hanger - Matt Black

Size	Code	£ Ex VAT	£ Inc VAT
330mm	101.0042	70.00	**84.00**
589mm	101.0046	84.00	**100.80**

Towel Hanger - Chrome

Size	Code	£ Ex VAT	£ Inc VAT
330mm	101.0043	70.00	**84.00**
589mm	101.0047	90.00	**108.00**

The Horizontal Tunstall Towel Hangers can be fitted on both sides of the radiator (as left hand or right hand).
Must be fitted before installation!

Designer Range

TUNSTALL TOWEL RAILS

Tunstall Towel Rail - Matt White

Size H x W	Delta △T30 Watts	Delta △T30 BTU	Delta △T50 Watts	Delta △T50 BTU	Element Output	Code	£ Ex VAT	£ Inc VAT
560 x 1000mm	292	996	550	1876	300W	89.0025	257.00	**308.40**
800 x 500mm	192	655	362	1235	150W	89.0029	178.00	**213.60**
800 x 600mm	222	758	418	1426	300W	89.0041	195.00	**234.00**
1200 x 500mm	279	952	528	1801	300W	89.0033	268.00	**321.60**
1200 x 600mm	322	1099	610	2081	450W	89.0045	296.00	**355.20**
1600 x 500mm	367	1252	699	2384	450W	89.0037	330.00	**396.00**
1600 x 600mm	423	1443	807	2752	600W	89.0049	373.00	**447.60**

Tunstall Towel Rail - Matt Anthracite

Size H x W	Delta △T30 Watts	Delta △T30 BTU	Delta △T50 Watts	Delta △T50 BTU	Element Output	Code	£ Ex VAT	£ Inc VAT
560 x 1000mm	292	996	550	1876	300W	89.0026	257.00	**308.40**
800 x 500mm	192	655	362	1235	150W	89.0030	178.00	**213.60**
800 x 600mm	222	758	418	1426	300W	89.0042	195.00	**234.00**
1200 x 500mm	279	952	528	1801	300W	89.0034	268.00	**321.60**
1200 x 600mm	322	1099	610	2081	450W	89.0046	296.00	**355.20**
1600 x 500mm	367	1252	699	2384	450W	89.0038	330.00	**396.00**
1600 x 600mm	423	1443	807	2752	600W	89.0050	373.00	**447.60**

Tunstall Towel Rail - Matt Black

Size H x W	Delta △T30 Watts	Delta △T30 BTU	Delta △T50 Watts	Delta △T50 BTU	Element Output	Code	£ Ex VAT	£ Inc VAT
560 x 1000mm	292	996	550	1876	300W	89.0027	257.00	**308.40**
800 x 500mm	192	655	362	1235	150W	89.0031	178.00	**213.60**
800 x 600mm	222	758	418	1426	300W	89.0043	195.00	**234.00**
1200 x 500mm	279	952	528	1801	300W	89.0035	268.00	**321.60**
1200 x 600mm	322	1099	610	2081	450W	89.0047	296.00	**355.20**
1600 x 500mm	367	1252	699	2384	450W	89.0039	330.00	**396.00**
1600 x 600mm	423	1443	807	2752	600W	89.0051	373.00	**447.60**

Tunstall Towel Rail - Chrome

Size H x W	Delta △T30 Watts	Delta △T30 BTU	Delta △T50 Watts	Delta △T50 BTU	Element Output	Code	£ Ex VAT	£ Inc VAT
560 x 1000mm	175	597	340	1160	150W	89.0028	376.00	**451.20**
800 x 500mm	115	393	224	764	150W	89.0032	323.00	**387.60**
800 x 600mm	132	451	257	877	150W	89.0044	356.00	**427.20**
1200 x 500mm	175	597	340	1160	150W	89.0036	386.00	**463.20**
1200 x 600mm	200	682	389	1327	300W	89.0048	423.00	**507.60**
1600 x 500mm	234	798	456	1555	300W	89.0040	486.00	**583.20**
1600 x 600mm	268	914	522	1781	300W	89.0052	534.00	**640.80**

TECHNICAL INFORMATION

All measurements in Height by Width. Radiators that are electric only are restricted to the heat output of the elements. Element size can be increased to full capacity of rail if using element type B, D, E, F or G. For element types see pages 324-337. For matching valves see pages 338-353. For indirect heating systems only. Tappings are approx. 46mm less than the width of the rail and approx. 83mm off the wall. Price includes radiator and wall fixing sets, valves extra.

All Tunstall Towel Rail models shown above are compatible with Element Type A, A+, B, D, E, F, and G

560x1000mm size is the only horizontal Tunstall Towel Rail

Pictured 89.0020 Matt White

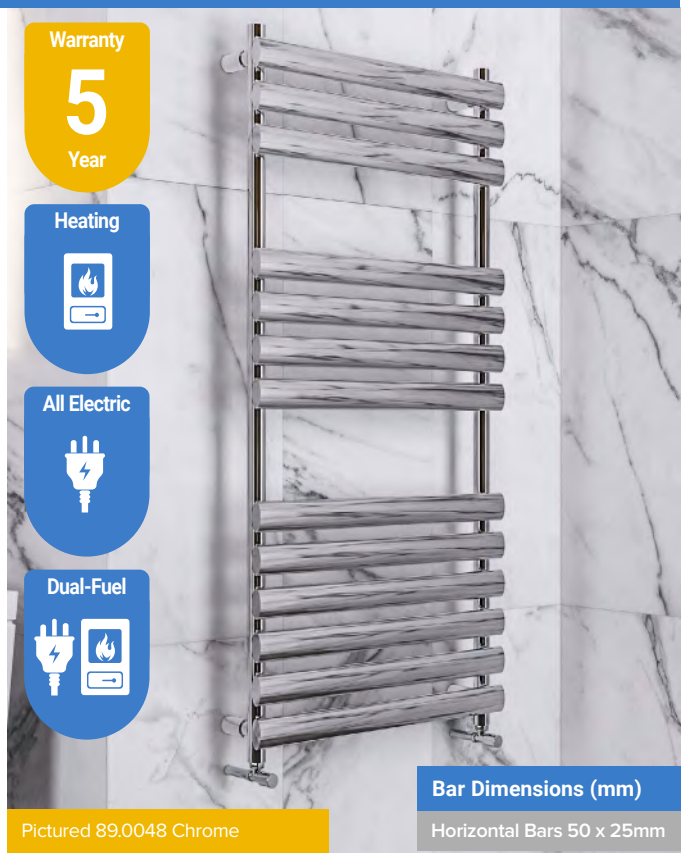

Pictured 89.0048 Chrome

Bar Dimensions (mm)

Horizontal Bars 50 x 25mm

FEATURES

- 50 x 25mm horizontal bars
- Tested to BS EN 442 standards
- 5 Year manufacturer's warranty*
- Can be single or dual fuel, or all electric

* With conditions

Technical Tables & Drawings

Page 396-397

Matt White

Matt Anthracite

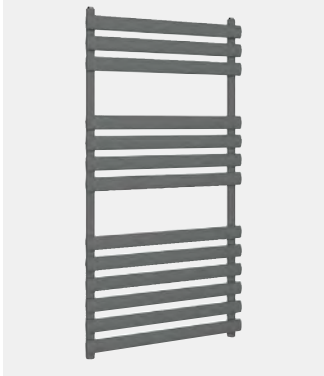

Matt Black

Chrome

Designer Range

TUNSTALL DOUBLE VERTICAL

Pictured 81.0142 Matt White

Bar Dimensions (mm)

Vertical Bars 50 x 25mm

Featuring a double vertical profile design, the Tunstall Double adds an elegant touch to any room in your home. Choose from three sophisticated colours: matt white, matt anthracite and matt black.

FEATURES
- 50 x 25mm vertical bars
- Double vertical profile construction
- Tested to BS EN 442 standards
- 5 Year manufacturer's warranty*
- Not suitable for elements

* With conditions

Technical Tables & Drawings
Page 396-397

TECHNICAL INFORMATION

All measurements in Height by Width. For matching valves see pages 338-353. Not suitable for elements. For indirect heating systems only. Tappings are the width of the rail and approx. 65mm off the wall. Projection from wall 104mm. Price includes radiator and wall fixing sets, valves extra.

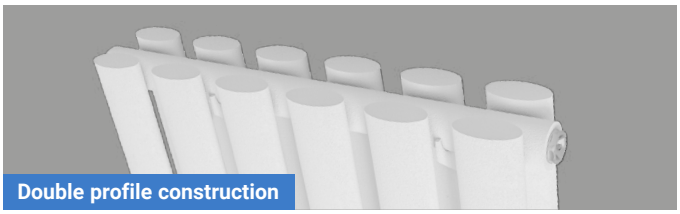

Double profile construction

Warranty 5 Year

Heating

Round Vent Caps
Page 357

Designer Range

TUNSTALL DOUBLE VERTICAL

Matt White

Tunstall Double Vertical Radiator - Matt White 1800mm Height

Width	Delta △T30 Watts	Delta △T30 BTU	Delta △T50 Watts	Delta △T50 BTU	Element Output	Element Type	Code	£ Ex VAT	£ Inc VAT
280mm	378	1289	743	2534	N/A	N/A	81.0140	247.00	**296.40**
350mm	472	1610	929	3168	N/A	N/A	81.0190	311.00	**373.20**
420mm	567	1934	1114	3799	N/A	N/A	81.0141	368.00	**441.60**
490mm	661	2255	1300	4433	N/A	N/A	81.0193	416.00	**499.20**
560mm	756	2578	1486	5068	N/A	N/A	81.0196	485.00	**582.00**
630mm	850	2899	1671	5699	N/A	N/A	81.0142	552.00	**662.40**

Matt Anthracite

Tunstall Double Vertical Radiator - Matt Anthracite 1800mm Height

Width	Delta △T30 Watts	Delta △T30 BTU	Delta △T50 Watts	Delta △T50 BTU	Element Output	Element Type	Code	£ Ex VAT	£ Inc VAT
280mm	378	1289	743	2534	N/A	N/A	81.0158	251.00	**301.20**
350mm	472	1610	929	3168	N/A	N/A	81.0191	320.00	**384.00**
420mm	567	1934	1114	3799	N/A	N/A	81.0159	377.00	**452.40**
490mm	661	2255	1300	4433	N/A	N/A	81.0194	425.00	**510.00**
560mm	756	2578	1486	5068	N/A	N/A	81.0197	494.00	**592.80**
630mm	850	2899	1671	5699	N/A	N/A	81.0160	563.00	**675.60**

Matt Black

Tunstall Double Vertical Radiator - Matt Black 1800mm Height

Width	Delta △T30 Watts	Delta △T30 BTU	Delta △T50 Watts	Delta △T50 BTU	Element Output	Element Type	Code	£ Ex VAT	£ Inc VAT
280mm	378	1289	743	2534	N/A	N/A	81.0172	251.00	**301.20**
350mm	472	1610	929	3168	N/A	N/A	81.0192	320.00	**384.00**
420mm	567	1934	1114	3799	N/A	N/A	81.0173	377.00	**452.40**
490mm	661	2255	1300	4433	N/A	N/A	81.0195	425.00	**510.00**
560mm	756	2578	1486	5068	N/A	N/A	81.0198	494.00	**592.80**
630mm	850	2899	1671	5699	N/A	N/A	81.0174	563.00	**675.60**

Pictured 81.0159 Matt Anthracite

Pictured 81.0195 Matt Black

Radiator Valves
Page 338-353

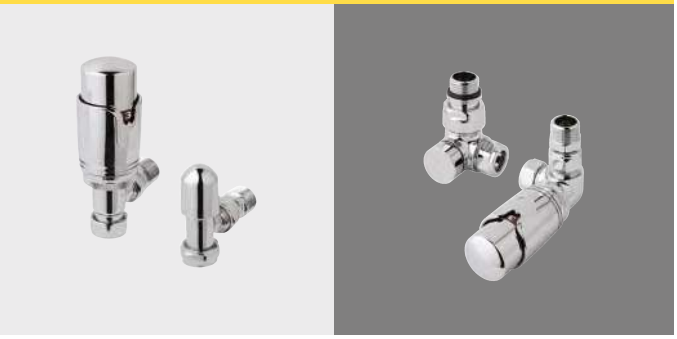

Designer Range

TUNSTALL DOUBLE HORIZONTAL

Bar Dimensions (mm)

Vertical Bars 50 x 25mm

Pictured 81.0137 Matt White

Pictured 81.0156 Matt Anthracite

Featuring a double vertical profile design, the Tunstall Double adds an elegant touch to any room in your home. Choose from three sophisticated colours: matt white, matt anthracite and matt black.

FEATURES
- 50 x 25mm vertical bars
- Double vertical profile construction
- Tested to BS EN 442 standards
- 5 Year manufacturer's warranty*
- Not suitable for elements

* With conditions

Technical Tables & Drawings
Page 396-397

Double profile construction

Warranty 5 Year

Heating

Round Vent Caps
Page 357

TECHNICAL INFORMATION

All measurements in Height by Width. For matching valves see pages 338-353. Not suitable for elements. For indirect heating systems only. Tappings are the width of the rail and approx. 65mm off the wall. Projection from wall 104mm. Price includes radiator and wall fixing sets, valves extra.

Designer Range

TUNSTALL DOUBLE HORIZONTAL

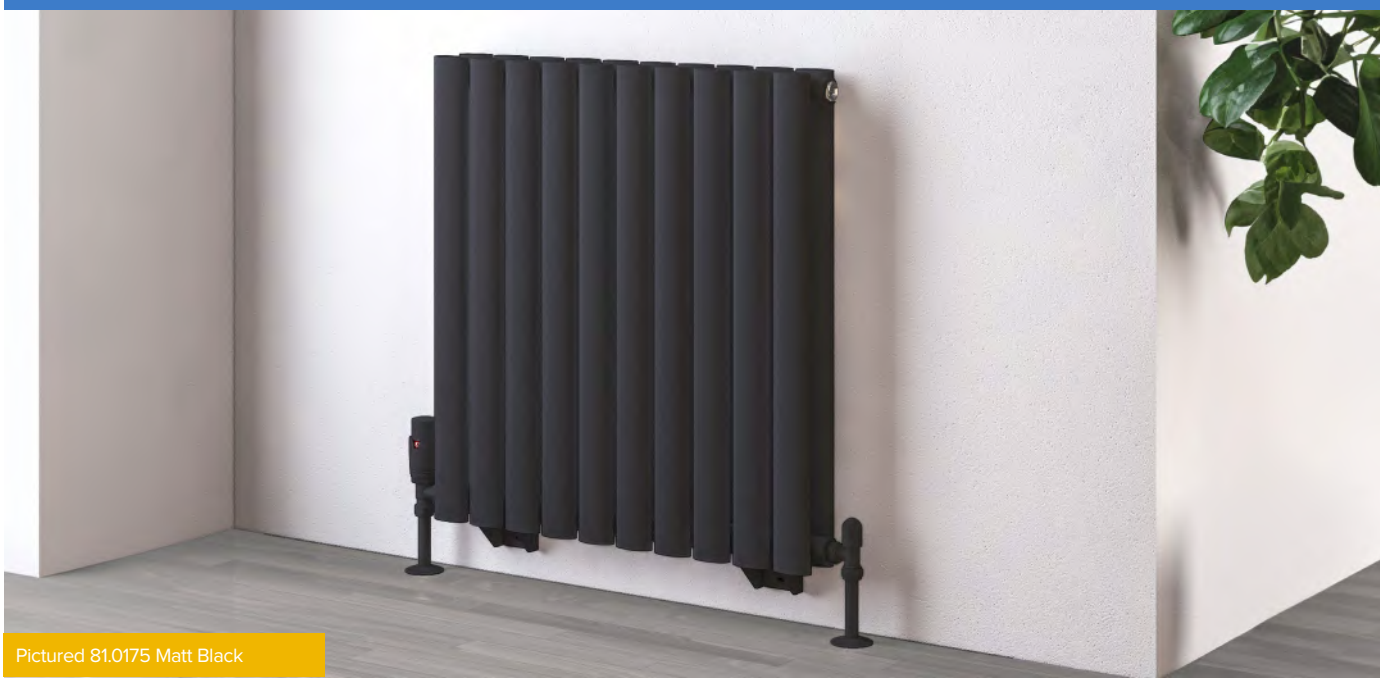

Pictured 81.0175 Matt Black

Matt White

Tunstall Double Horizontal Radiator - Matt White 600mm Height

Width	Delta △T30 Watts	Delta △T30 BTU	Delta △T50 Watts	Delta △T50 BTU	Element Output	Element Type	Code	£ Ex VAT	£ Inc VAT
471mm	282	962	550	1876	N/A	N/A	81.0199	216.00	**259.20**
589mm	353	1204	687	2343	N/A	N/A	81.0136	268.00	**321.60**
648mm	388	1324	756	2578	N/A	N/A	81.0202	307.00	**368.40**
825mm	494	1685	962	3281	N/A	N/A	81.0137	375.00	**450.00**
1002mm	600	2046	1168	3983	N/A	N/A	81.0138	453.00	**543.60**
1061mm	635	2166	1237	4219	N/A	N/A	81.0205	492.00	**590.40**
1179mm	705	2405	1375	4689	N/A	N/A	81.0139	531.00	**637.20**

Matt Black

Tunstall Double Horizontal Radiator - Matt Black 600mm Height

Width	Delta △T30 Watts	Delta △T30 BTU	Delta △T50 Watts	Delta △T50 BTU	Element Output	Element Type	Code	£ Ex VAT	£ Inc VAT
471mm	282	962	550	1876	N/A	N/A	81.0201	224.00	**268.80**
589mm	353	1204	687	2343	N/A	N/A	81.0175	275.00	**330.00**
648mm	388	1324	756	2578	N/A	N/A	81.0204	315.00	**378.00**
825mm	494	1685	962	3281	N/A	N/A	81.0176	381.00	**457.20**
1002mm	600	2046	1168	3983	N/A	N/A	81.0177	460.00	**552.00**
1061mm	635	2166	1237	4219	N/A	N/A	81.0207	502.00	**602.40**
1179mm	705	2405	1375	4689	N/A	N/A	81.0178	543.00	**651.60**

Matt Anthracite

Tunstall Double HorizontalRadiator - Matt Anthracite 600mm Height

Width	Delta △T30 Watts	Delta △T30 BTU	Delta △T50 Watts	Delta △T50 BTU	Element Output	Element Type	Code	£ Ex VAT	£ Inc VAT
471mm	282	962	550	1876	N/A	N/A	81.0200	224.00	**268.80**
589mm	353	1204	687	2343	N/A	N/A	81.0154	275.00	**330.00**
648mm	388	1324	756	2578	N/A	N/A	81.0203	315.00	**378.00**
825mm	494	1685	962	3281	N/A	N/A	81.0155	381.00	**457.20**
1002mm	600	2046	1168	3983	N/A	N/A	81.0156	460.00	**552.00**
1061mm	635	2166	1237	4219	N/A	N/A	81.0206	502.00	**602.40**
1179mm	705	2405	1375	4689	N/A	N/A	81.0157	543.00	**651.60**

COMPLETE THE LOOK

41.3023

15mm TRV & Lockshield - Matt White

Code	£ Ex VAT	£ Inc VAT
41.3023	47.00	**56.40**

41.3024

15mm TRV & Lockshield - Matt Anthracite

Code	£ Ex VAT	£ Inc VAT
41.3024	47.00	**56.40**

41.3025

15mm TRV & Lockshield - Matt Black

Code	£ Ex VAT	£ Inc VAT
41.3025	47.00	**56.40**

Designer Range

TUNSTALL DOUBLE TOWEL RAIL

Pictured 81.0149 Matt White

The double horizontal elliptical profiles of this towel rail will warm both your towels and your bathroom. Available in three colour options: matt white, matt anthracite and matt black.

FEATURES
- 50 x 25mm horizontal bars
- Double horizontal profile construction
- Tested to BS EN 442 standards
- 5 Year manufacturer's warranty*
- Can be single, dual fuel or all electric

* With conditions

Technical Tables & Drawings
Page 398-399

Pictured 81.0162 Matt Anthracite

Tunstall Double Towel Rail - Matt White

Size H x W	Delta △T30 Watts	Delta △T30 BTU	Delta △T50 Watts	Delta △T50 BTU	Element Output	Code	£ Ex VAT	£ Inc VAT
560 x 1000mm	438	1494	824	2810	600W	81.0149	362.00	**434.40**
800 x 500mm	283	966	534	1821	300W	81.0143	281.00	**337.20**
800 x 600mm	331	1129	635	2166	450W	81.0146	299.00	**358.80**
1200 x 500mm	396	1351	771	2630	450W	81.0144	401.00	**481.20**
1200 x 600mm	463	1579	901	3073	600W	81.0147	431.00	**517.20**
1600 x 500mm	539	1838	1032	3520	600W	81.0145	524.00	**628.80**
1600 x 600mm	622	2122	1192	4065	750W	81.0148	562.00	**674.40**

Tunstall Double Towel Rail - Matt Anthracite

Size H x W	Delta △T30 Watts	Delta △T30 BTU	Delta △T50 Watts	Delta △T50 BTU	Element Output	Code	£ Ex VAT	£ Inc VAT
560 x 1000mm	438	1494	824	2810	600W	81.0167	362.00	**434.40**
800 x 500mm	283	966	534	1821	300W	81.0161	281.00	**337.20**
800 x 600mm	331	1129	635	2166	450W	81.0164	299.00	**358.80**
1200 x 500mm	396	1351	771	2630	450W	81.0162	401.00	**481.20**
1200 x 600mm	463	1579	901	3073	600W	81.0165	431.00	**517.20**
1600 x 500mm	539	1838	1032	3520	600W	81.0163	524.00	**628.80**
1600 x 600mm	622	2122	1192	4065	750W	81.0166	562.00	**674.40**

Tunstall Double Towel Rail - Matt Black

Size H x W	Delta △T30 Watts	Delta △T30 BTU	Delta △T50 Watts	Delta △T50 BTU	Element Output	Code	£ Ex VAT	£ Inc VAT
560 x 1000mm	438	1494	824	2810	600W	81.0179	362.00	**434.40**
800 x 500mm	283	966	534	1821	300W	81.0180	281.00	**337.20**
800 x 600mm	331	1129	635	2166	450W	81.0181	299.00	**358.80**
1200 x 500mm	396	1351	771	2630	450W	81.0182	401.00	**481.20**
1200 x 600mm	463	1579	901	3073	600W	81.0183	431.00	**517.20**
1600 x 500mm	539	1838	1032	3520	600W	81.0184	524.00	**628.80**
1600 x 600mm	622	2122	1192	4065	750W	81.0185	562.00	**674.40**

TECHNICAL INFORMATION

All measurements in Height by Width. Radiators that are electric only are restricted to the heat output of the elements. Element size can be increased to full capacity of rail if using element type B, D, E, F or G. For element types see pages 324-337. For matching valves see pages 338-353. For indirect heating systems only. Tappings are approx. 46mm less than the width of the rail and approx. 70-75mm off the wall. Price includes radiator and wall fixing sets, valves extra.

Double profile construction

Round Vent Caps
Page 357

All Tunstall Double Towel Rails models shown above are compatible with Element Type A, A+, B, D, E, F, and G

Designer Range

TUNSTALL MIRROR

Pictured 81.0169 Matt Anthracite

Profiles in elliptical shape of this radiator is in perfect harmony with the mirror placed in the middle. Available in three colours.

FEATURES

- Single vertical profile construction, mirror width 145mm
- Tested to BS EN 442 standards
- 5 Year manufacturer's warranty*
- Not suitable for elements

* With conditions

Tunstall Mirror Radiator - Matt White

Size H x W	Delta △T30		Delta △T50		Code	£ Ex VAT	£ Inc VAT
	Watts	BTU	Watts	BTU			
1800 x 380mm	275	938	532	1815	81.0150	297.00	**356.40**
1800 x 500mm	401	1368	780	2660	81.0151	437.00	**524.40**

Tunstall Mirror Radiator - Matt Anthracite

Size H x W	Delta △T30		Delta △T50		Code	£ Ex VAT	£ Inc VAT
	Watts	BTU	Watts	BTU			
1800 x 380mm	275	938	532	1815	81.0168	297.00	**356.40**
1800 x 500mm	401	1368	780	2660	81.0169	437.00	**524.40**

Tunstall Mirror Radiator - Matt Black

Size H x W	Delta △T30		Delta △T50		Code	£ Ex VAT	£ Inc VAT
	Watts	BTU	Watts	BTU			
1800 x 380mm	275	938	532	1815	81.0186	297.00	**356.40**
1800 x 500mm	401	1368	780	2660	81.0187	437.00	**524.40**

TECHNICAL INFORMATION

All measurements in Height by Width. For matching valves see pages 338-353. Not suitable for elements. For indirect heating systems only. Tappings are the width of the rail and approx. 40mm off the wall. Projection from wall 79mm. Mirror width 145mm. Price includes radiator and wall fixing sets, valves extra.

Single profile construction

TUNSTALL DOUBLE MIRROR

Pictured 81.0152 Matt White

Profiles in elliptical shape of this radiator is in perfect harmony with the mirror placed in the middle. Available in three colours.

FEATURES

- Double vertical profile construction, mirror width 145mm
- Tested to BS EN 442 standards
- 5 Year manufacturer's warranty*
- Not suitable for elements

* With conditions

Tunstall Double Mirror Radiator - Matt White

Size H x W	Delta △T30		Delta △T50		Code	£ Ex VAT	£ Inc VAT
	Watts	BTU	Watts	BTU			
1800 x 380mm	454	1549	868	2960	81.0152	357.00	**428.40**
1800 x 500mm	627	2139	1225	4178	81.0153	531.00	**637.20**

Tunstall Double Mirror Radiator - Matt Anthracite

Size H x W	Delta △T30		Delta △T50		Code	£ Ex VAT	£ Inc VAT
	Watts	BTU	Watts	BTU			
1800 x 380mm	454	1549	868	2960	81.0170	357.00	**428.40**
1800 x 500mm	627	2139	1225	4178	81.0171	531.00	**637.20**

Tunstall Double Mirror Radiator - Matt Black

Size H x W	Delta △T30		Delta △T50		Code	£ Ex VAT	£ Inc VAT
	Watts	BTU	Watts	BTU			
1800 x 380mm	454	1549	868	2960	81.0188	357.00	**428.40**
1800 x 500mm	627	2139	1225	4178	81.0189	531.00	**637.20**

TECHNICAL INFORMATION

All measurements in Height by Width. For matching valves see pages 338-353. Not suitable for elements. For indirect heating systems only. Tappings are the width of the rail and approx. 65mm off the wall. Projection from wall 104mm. Mirror width 145mm. Price includes radiator and wall fixing sets, valves extra.

Double profile construction

Designer Range

DEDDINGTON VERTICAL

Pictured 89.0795 Chrome with 89.0848 Towel Hanger x2

Rear fixing metal wall brackets

Pictured 89.1522 Matt Cobalt Blue

Bar Dimensions (mm)

Vertical Bars 70 x 11mm

Flat and broad vertical profiles meet the perfect craftmanship. This vertical model is 1800mm high and available in 5 widths. (3 widths available for Matt Cobalt Blue colour) Towel hangers are same colours and widths as the radiators. (except Matt Cobalt Blue colour)

Deddington Vertical Radiator - Chrome 1800mm Height

Size H x W	Delta △T30		Delta △T50		Code	£ Ex VAT	£ Inc VAT
	Watts	BTU	Watts	BTU			
1800 x 310mm	194	662	386	1317	89.0794	481.00	**577.20**
1800 x 390mm	241	822	479	1634	89.1523	576.00	**691.20**
1800 x 470mm	287	979	571	1948	89.0795	686.00	**823.20**
1800 x 550mm	333	1136	662	2258	89.1524	758.00	**909.60**
1800 x 630mm	378	1289	752	2565	89.0796	847.00	**1016.40**

Deddington Vertical Radiator - Matt Cobalt Blue 1800mm Height

Size H x W	Delta △T30		Delta △T50		Code	£ Ex VAT	£ Inc VAT
	Watts	BTU	Watts	BTU			
1800 x 310mm	320	1092	636	2169	89.1520	381.00	**457.20**
1800 x 470mm	485	1654	963	3284	89.1521	542.00	**650.40**
1800 x 630mm	650	2217	1291	4403	89.1522	668.00	**801.60**

Deddington Towel Hanger - Chrome

Description	Code	£ Ex VAT	£ Inc VAT
310mm	89.0847	62.00	**74.40**
390mm	89.1540	67.00	**80.40**
470mm	89.0848	70.00	**84.00**
550mm	89.1541	73.00	**87.60**
630mm	89.0849	76.00	**91.20**

*Towel hangers are only compatible with Deddington radiators. Radiators projection from wall 160mm when towel hanger is fitted. Max of 2 towel hangers can be fitted. Towel hanger material is steel. Must be fitted before installation.

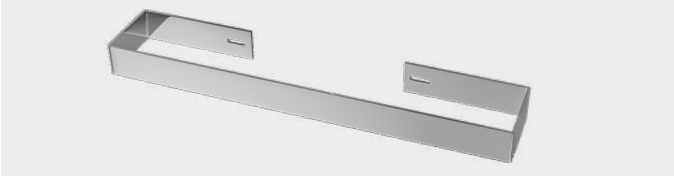

Warranty 5 Year

Heating

Technical Tables & Drawings
Page 398-399

FEATURES

- 70 x 11mm vertical bars
- Single profile construction
- Tested to BS EN 442 standards
- 5 Year manufacturer's warranty*
- Not suitable for elements

* With conditions

TECHNICAL INFORMATION

All measurements in Height by Width. For matching valves see pages 338-353. Not suitable for elements. For indirect heating systems only. Comes with built-in flow diverter. Tappings are the width of the rail and approx. 60mm off the wall. Projection from wall 100mm. Price includes radiator and wall fixing sets, valves extra.

Designer Range

DEDDINGTON VERTICAL

Pictured 89.0852 Gloss White with 89.0878 Towel Hanger x1

Flat and broad vertical profiles meet the perfect craftmanship. These vertical models are 1800mm high and available in 5 widths. Towel hangers are same colours and widths as the radiators.

Deddington Vertical Radiator - Gloss White 1800mm Height

Size H x W	Delta △T30		Delta △T50		Code	£ Ex VAT	£ Inc VAT
	Watts	BTU	Watts	BTU			
1800 x 310mm	320	1092	636	2169	89.0850	381.00	**457.20**
1800 x 390mm	403	1375	800	2728	89.1511	465.00	**558.00**
1800 x 470mm	485	1654	963	3284	89.0851	542.00	**650.40**
1800 x 550mm	567	1934	1127	3844	89.1512	607.00	**728.40**
1800 x 630mm	650	2217	1291	4403	89.0852	668.00	**801.60**

Deddington Vertical Radiator - Matt Anthracite 1800mm Height

Size H x W	Delta △T30		Delta △T50		Code	£ Ex VAT	£ Inc VAT
	Watts	BTU	Watts	BTU			
1800 x 310mm	320	1092	636	2169	89.0863	381.00	**457.20**
1800 x 390mm	403	1375	800	2728	89.1513	465.00	**558.00**
1800 x 470mm	485	1654	963	3284	89.0864	542.00	**650.40**
1800 x 550mm	567	1934	1127	3844	89.1514	607.00	**728.40**
1800 x 630mm	650	2217	1291	4403	89.0865	668.00	**801.60**

Deddington Vertical Radiator - Matt Black 1800mm Height

Size H x W	Delta △T30		Delta △T50		Code	£ Ex VAT	£ Inc VAT
	Watts	BTU	Watts	BTU			
1800 x 310mm	320	1092	636	2169	89.1515	381.00	**457.20**
1800 x 390mm	403	1375	800	2728	89.1516	465.00	**558.00**
1800 x 470mm	485	1654	963	3284	89.1517	542.00	**650.40**
1800 x 550mm	567	1934	1127	3844	89.1518	607.00	**728.40**
1800 x 630mm	650	2217	1291	4403	89.1519	668.00	**801.60**

FEATURES
- 70 x 11mm vertical bars
- Single profile construction
- Tested to BS EN 442 standards
- 5 Year manufacturer's warranty*
- Not suitable for elements

* With conditions

Warranty 5 Year

Heating

TECHNICAL INFORMATION

All measurements in Height by Width. For matching valves see pages 338-353. Not suitable for elements. For indirect heating systems only. Comes with built-in flow diverter. Tappings are the width of the rail and approx. 60mm off the wall. Projection from wall 100mm. Price includes radiator and wall fixing sets, valves extra.

Deddington Towel Hanger - Gloss White

Description	Code	£ Ex VAT	£ Inc VAT
310mm	89.0876	60.00	**72.00**
390mm	89.1531	62.00	**74.40**
470mm	89.0877	65.00	**78.00**
550mm	89.1532	68.00	**81.60**
630mm	89.0878	72.00	**86.40**

*Towel hangers are only compatible with Deddington radiators. Radiators projection from wall 160mm when towel hanger is fitted. Max of 2 towel hangers can be fitted. Towel hanger material is steel. Must be fitted before installation.

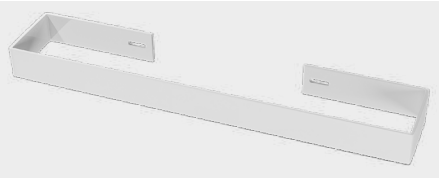

Deddington Towel Hangers- Matt Anthracite

Description	Code	£ Ex VAT	£ Inc VAT
310mm	89.0879	60.00	**72.00**
390mm	89.1533	62.00	**74.40**
470mm	89.0880	65.00	**78.00**
550mm	89.1534	68.00	**81.60**
630mm	89.0881	72.00	**86.40**

*Towel hangers are only compatible with Deddington radiators. Radiators projection from wall 160mm when towel hanger is fitted. Max of 2 towel hangers can be fitted. Towel hanger material is steel. Must be fitted before installation.

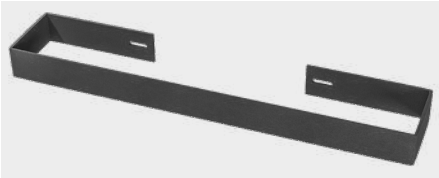

Deddington Towel Hanger - Matt Black

Description	Code	£ Ex VAT	£ Inc VAT
310mm	89.1535	60.00	**72.00**
390mm	89.1536	62.00	**74.40**
470mm	89.1537	65.00	**78.00**
550mm	89.1538	68.00	**81.60**
630mm	89.1539	72.00	**86.40**

*Towel hangers are only compatible with Deddington radiators. Radiators projection from wall 160mm when towel hanger is fitted. Max of 2 towel hangers can be fitted. Towel hanger material is steel. Must be fitted before installation.

Designer Range

DEDDINGTON HORIZONTAL

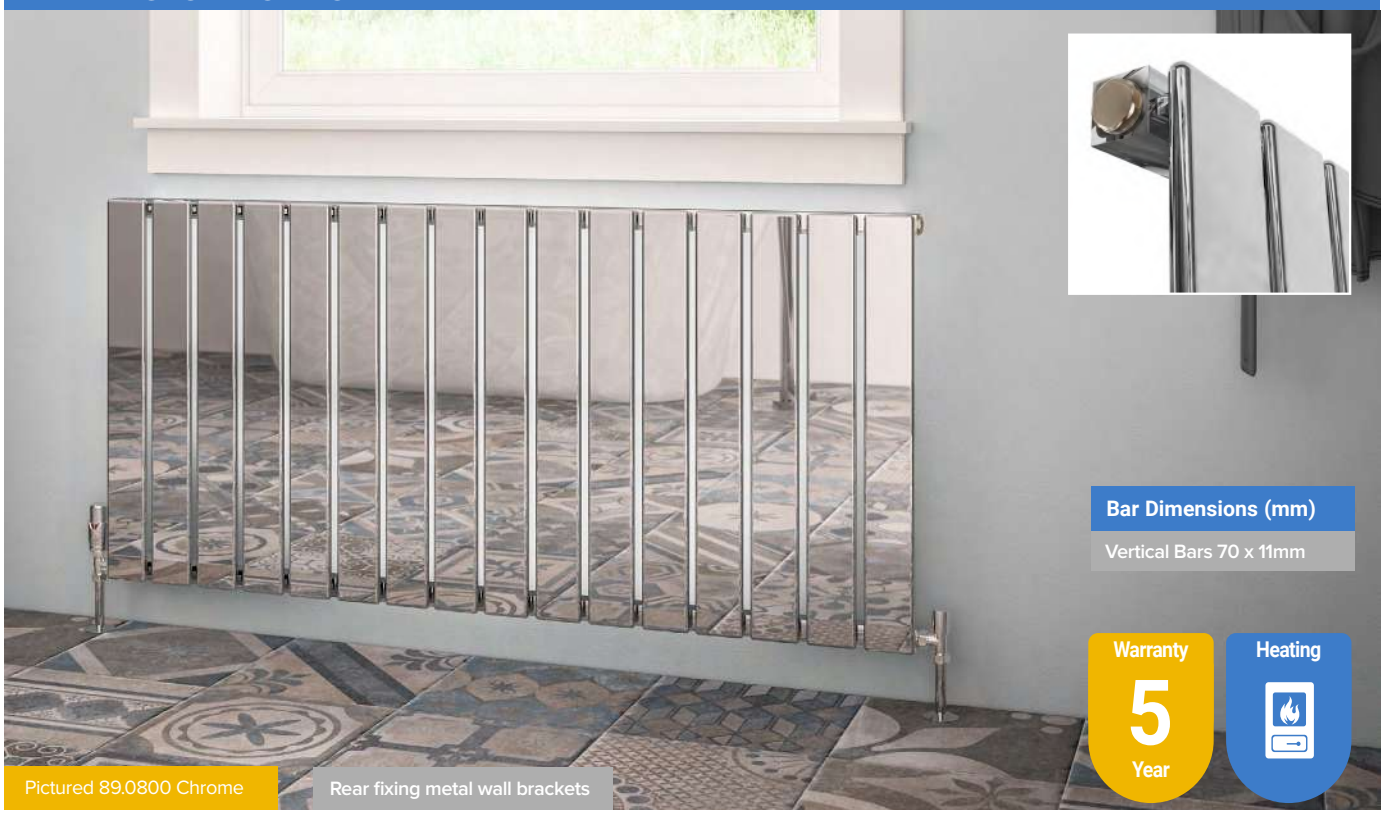

Flat and broad vertical profiles meet the perfect craftmanship. This horizontal model is available in 600mm height and 4 widths. This beautifully finished radiator will have all the attention in the room.

FEATURES

- 70 x 11mm vertical bars
- Rear fixing metal wall brackets
- Single profile construction
- Tested to BS EN 442 standards
- 5 Year manufacturer's warranty*
- Not suitable for elements

* With conditions

Technical Tables & Drawings
Page 400-401

TECHNICAL INFORMATION

All measurements in Height by Width. For matching valves see pages 338-353. Not suitable for elements. For indirect heating systems only. Comes with built-in flow diverter. Tappings are the width of the rail and approx. 60mm off the wall. Projection from wall 100mm. Price includes radiator and wall fixing sets, valves extra.

Deddington Horizontal Radiator - Chrome 600mm Height

Size H x W	Delta △T30		Delta △T50		Code	£ Ex VAT	£ Inc VAT
	Watts	BTU	Watts	BTU			
600 x 390mm	102	348	197	672	89.1507	272.00	**326.40**
600 x 470mm	122	417	234	798	89.1508	319.00	**382.80**
600 x 550mm	141	481	272	928	89.1509	362.00	**434.40**
600 x 630mm	160	546	309	1054	89.0797	409.00	**490.80**
600 x 790mm	198	676	382	1303	89.0798	489.00	**586.80**
600 x 950mm	236	805	454	1549	89.0799	553.00	**663.60**
600 x 1110mm	273	931	526	1794	89.1510	593.00	**711.60**
600 x 1270mm	310	1058	597	2036	89.0800	627.00	**752.40**

Deddington Horizontal Radiator - Matt Cobalt Blue 600mm Height

Size H x W	Delta △T30		Delta △T50		Code	£ Ex VAT	£ Inc VAT
	Watts	BTU	Watts	BTU			
600 x 630mm	235	802	470	1603	89.1503	323.00	**387.60**
600 x 790mm	294	1003	589	2009	89.1504	386.00	**463.20**
600 x 950mm	354	1208	708	2415	89.1505	436.00	**523.20**
600 x 1270mm	473	1613	946	3226	89.1506	496.00	**595.20**

Designer Range

DEDDINGTON HORIZONTAL

Pictured 89.0855 Gloss White

Deddington Horizontal Radiator - Gloss White 600mm Height

Size H x W	Delta △T30		Delta △T50		Code	£ Ex VAT	£ Inc VAT
	Watts	BTU	Watts	BTU			
600 x 390mm	145	495	291	993	89.1491	217.00	**260.40**
600 x 470mm	175	597	351	1197	89.1492	255.00	**306.00**
600 x 550mm	205	700	410	1399	89.1493	289.00	**346.80**
600 x 630mm	235	802	470	1603	89.0853	323.00	**387.60**
600 x 790mm	294	1003	589	2009	89.0854	386.00	**463.20**
600 x 950mm	354	1208	708	2415	89.0855	436.00	**523.20**
600 x 1110mm	413	1409	827	2821	89.1494	474.00	**568.80**
600 x 1270mm	473	1613	946	3226	89.0856	496.00	**595.20**

Pictured 89.0867 Matt Anthracite

Deddington Horizontal Radiator - Matt Anthracite 600mm Height

Size H x W	Delta △T30		Delta △T50		Code	£ Ex VAT	£ Inc VAT
	Watts	BTU	Watts	BTU			
600 x 390mm	145	495	291	993	89.1495	217.00	**260.40**
600 x 470mm	175	597	351	1197	89.1496	255.00	**306.00**
600 x 550mm	205	700	410	1399	89.1497	289.00	**346.80**
600 x 630mm	235	802	470	1603	89.0866	323.00	**387.60**
600 x 790mm	294	1003	589	2009	89.0867	386.00	**463.20**
600 x 950mm	354	1208	708	2415	89.0868	436.00	**523.20**
600 x 1110mm	413	1409	827	2821	89.1498	474.00	**568.80**
600 x 1270mm	473	1613	946	3226	89.0869	496.00	**595.20**

Pictured 89.1499 Matt Black

Magnetic Towel Hangers
Page 157

Deddington Horizontal Radiator - Matt Black 600mm Height

Size H x W	Delta △T30		Delta △T50		Code	£ Ex VAT	£ Inc VAT
	Watts	BTU	Watts	BTU			
600 x 630mm	235	802	470	1603	89.1499	323.00	**387.60**
600 x 790mm	294	1003	589	2009	89.1500	386.00	**463.20**
600 x 950mm	354	1208	708	2415	89.1501	436.00	**523.20**
600 x 1270mm	473	1613	946	3226	89.1502	496.00	**595.20**

Designer Range

DEDDINGTON TOWEL RAILS

Pictured 89.0804 Chrome

Rear fixing metal wall brackets

A designer towel rail in 5 finishes and with broad horizontal bars that is available in 3 heights and 2 widths.

FEATURES
- 70 x 11mm horizontal bars
- Rear fixing metal wall brackets
- Stunning chrome surface
- Single profile construction
- Tested to BS EN 442 standards
- 5 Year manufacturer's warranty*
- Can be single, dual fuel or all electric

* With conditions

Technical Tables & Drawings
Page 400-401

Warranty 5 Year | Heating | All Electric | Dual-Fuel

All Deddington Towel Rail models shown above are compatible with Element Type A, A+, B, D, E, F, G

Round Vent Caps
Page 357

Pictured 89.0805 Chrome

Deddington Towel Rail - Chrome

Size H x W	Delta △T30 Watts	Delta △T30 BTU	Delta △T50 Watts	Delta △T50 BTU	Element Output	Code	£ Ex VAT	£ Inc VAT
800 x 500mm	132	451	253	863	150W	89.0801	364.00	**436.80**
800 x 600mm	151	515	291	993	150W	89.0802	401.00	**481.20**
1200 x 500mm	189	645	362	1235	300W	89.0803	474.00	**568.80**
1200 x 600mm	217	740	416	1419	300W	89.0804	520.00	**624.00**
1800 x 500mm	268	914	513	1750	300W	89.0805	676.00	**811.20**
1800 x 600mm	308	1051	589	2009	450W	89.0806	743.00	**891.60**

TECHNICAL INFORMATION

All measurements in Height by Width. Radiators that are electric only are restricted to the heat output of the elements. Element size can be increased to full capacity of rail if using element type B, D, E, F or G. For element types see pages 324-337. For matching valves see pages 338-353. For indirect heating systems only. Tappings are 30mm less than the width of the rail and approx. 60mm off the wall. Projection from wall 100mm. Price includes radiator and wall fixing sets, valves extra.

Designer Range

DEDDINGTON TOWEL RAILS

Pictured 89.1528 Matt Cobalt Blue

Pictured 89.0871 Matt Anthracite

Deddington Towel Rail - Gloss White

Size H x W	Delta △T30 Watts	Delta △T30 BTU	Delta △T50 Watts	Delta △T50 BTU	Element Output	Code	£ Ex VAT	£ Inc VAT
800 x 500mm	215	734	405	1382	150W	89.0857	311.00	**373.20**
800 x 600mm	250	853	472	1610	150W	89.0858	343.00	**411.60**
1200 x 500mm	306	1044	578	1971	300W	89.0859	404.00	**484.80**
1200 x 600mm	356	1214	672	2292	300W	89.0860	445.00	**534.00**
1800 x 500mm	435	1484	822	2804	300W	89.0861	576.00	**691.20**
1800 x 600mm	506	1726	956	3260	450W	89.0862	634.00	**760.80**

Deddington Towel Rail - Matt Anthracite

Size H x W	Delta △T30 Watts	Delta △T30 BTU	Delta △T50 Watts	Delta △T50 BTU	Element Output	Code	£ Ex VAT	£ Inc VAT
800 x 500mm	215	734	405	1382	150W	89.0870	311.00	**373.20**
800 x 600mm	250	853	472	1610	150W	89.0871	343.00	**411.60**
1200 x 500mm	306	1044	578	1971	300W	89.0872	404.00	**484.80**
1200 x 600mm	356	1214	672	2292	300W	89.0873	445.00	**534.00**
1800 x 500mm	435	1484	822	2804	300W	89.0874	576.00	**691.20**
1800 x 600mm	506	1726	956	3260	450W	89.0875	634.00	**760.80**

Deddington Towel Rail - Matt Black

Size H x W	Delta △T30 Watts	Delta △T30 BTU	Delta △T50 Watts	Delta △T50 BTU	Element Output	Code	£ Ex VAT	£ Inc VAT
800 x 500mm	215	734	405	1382	150W	89.1525	311.00	**373.20**
1200 x 500mm	306	1044	578	1971	300W	89.1526	404.00	**484.80**
1800 x 500mm	435	1484	822	2804	450W	89.1527	576.00	**691.20**

Deddington Towel Rail - Matt Cobalt Blue

Size H x W	Delta △T30 Watts	Delta △T30 BTU	Delta △T50 Watts	Delta △T50 BTU	Element Output	Code	£ Ex VAT	£ Inc VAT
800 x 500mm	215	734	405	1382	150W	89.1528	311.00	**373.20**
1200 x 500mm	306	1044	578	1971	300W	89.1529	404.00	**484.80**
1800 x 500mm	435	1484	822	2804	450W	89.1530	576.00	**691.20**

800mm High

1200mm High

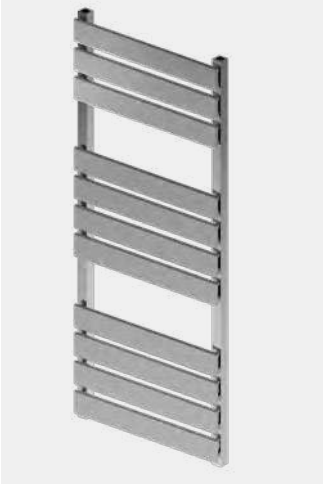

1800mm High

All Deddington Towel Rail models shown above are compatible with Element Type A, A+, B, D, E, F, G

Designer Range

ADDINGTON II TYPE 10 - GLOSS WHITE

Warranty
5
Year

Heating

All Electric

Dual-Fuel

HEATING NOTE: Radiators that are electric only are restricted to the heat output of the elements.

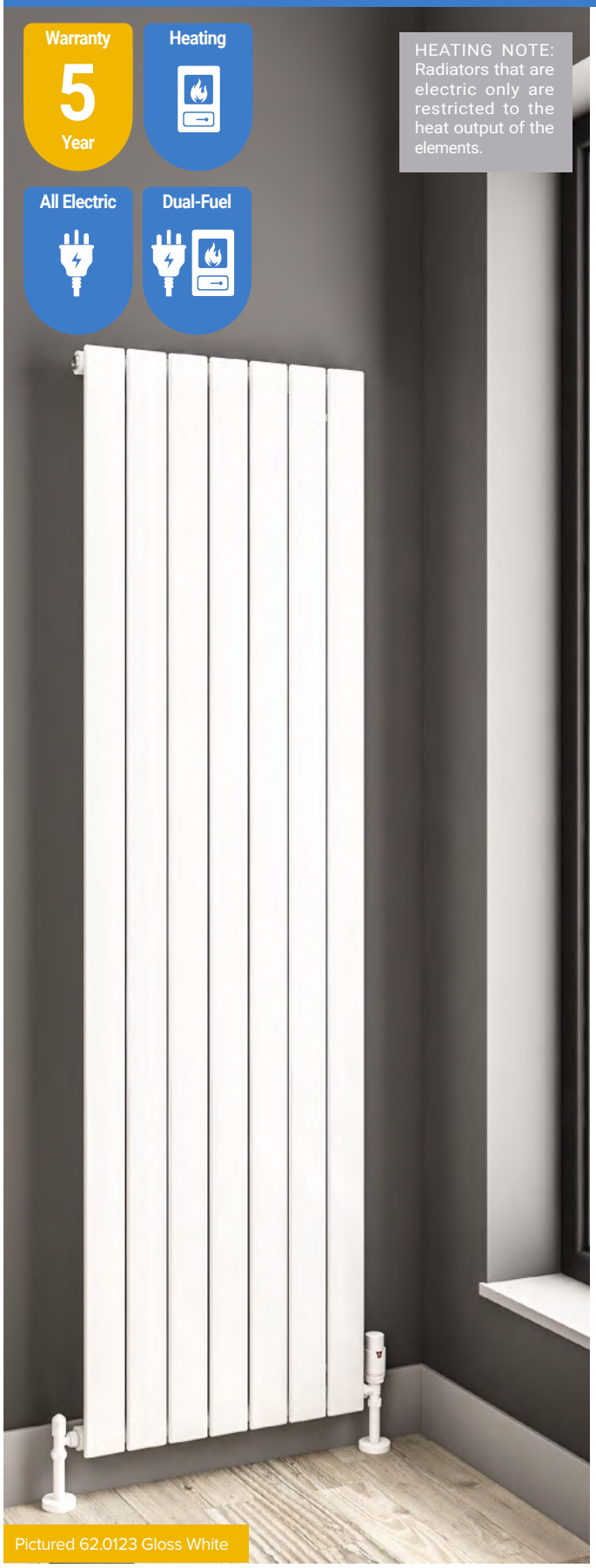

Pictured 62.0123 Gloss White

Transform your space with the sleek and contemporary Addington II Type 10 radiator. Designed to complement modern interiors, it's slim profile and clean flat panels make it a perfect choice for saving space while adding a touch of elegance. Finished in durable powder coating with various colours, it's built to last and look good.

Towel Hangers
Page 164-165

Bar Dimensions (mm)

Vertical Bars 70 x 11mm

Pictured 62.0119 Gloss White

Pictured 62.0106 Gloss White with 101.0071 x 1 Magnetic Towel Hanger

Designer Range

ADDINGTON II TYPE 10 - GLOSS WHITE

FEATURES
- Tested to BS EN 442 standards
- Can be installed vertically or horizontally
- Can be single, dual fuel or all electric (not all sizes)
- 5 Year Manufacturer's Warranty*

* With conditions

Technical Tables & Drawings
Page 400-401

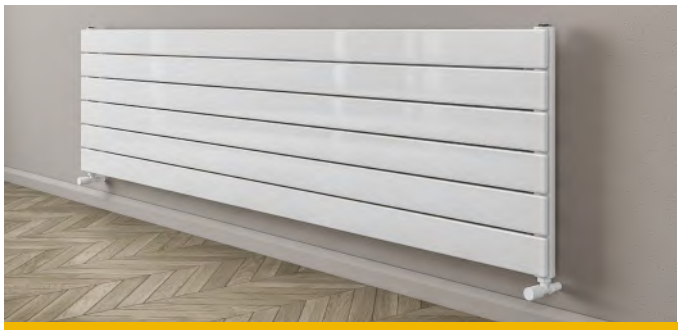

Pictured 62.0122 Gloss White (Fitted Horizontally)

Single profile construction

Radiator can be installed vertically or horizontally using the pre-fitted wall bracket holders. (Below images)

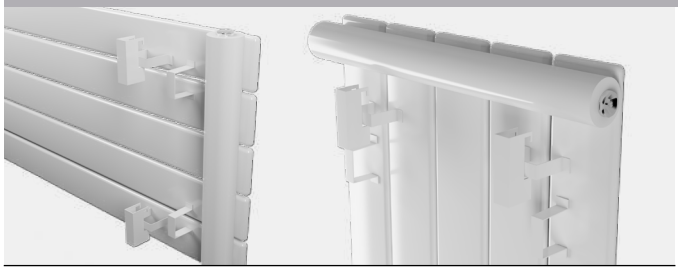

500mm Height
Addington II Type 10 Vertical / Horizontal Radiators - Gloss White

Width	Delta △T30 Watts	Delta △T30 BTU	Delta △T50 Watts	Delta △T50 BTU	Element Output	Element Type	Code	£ Ex VAT	£ Inc VAT
522mm	142	485	261	891	150W	A, A+, C, E, H	62.0100	186.00	**223.20**
596mm	163	556	298	1017	150W	A, A+, C, E, H	62.0101	200.00	**240.00**

600mm Height
Addington II Type 10 Vertical / Horizontal Radiators - Gloss White

Width	Delta △T30 Watts	Delta △T30 BTU	Delta △T50 Watts	Delta △T50 BTU	Element Output	Element Type	Code	£ Ex VAT	£ Inc VAT
300mm	94	321	173	590	150W	A, A+	62.0102	143.00	**171.60**
374mm	117	399	217	740	150W	A, A+	62.0103	162.00	**194.40**
448mm	140	478	260	887	150W	A, A+, C, E, H	62.0104	176.00	**211.20**
522mm	164	560	303	1034	150W	A, A+, C, E, H	62.0105	195.00	**234.00**
596mm	187	638	347	1184	300W	A, A+, C, E, H	62.0106	214.00	**256.80**
670mm	211	720	390	1330	300W	A, A+, C, E, H	62.0107	233.00	**279.60**
818mm	257	877	477	1627	450W	A, A+, C, E, H	62.0108	266.00	**319.20**
1040mm	328	1119	607	2070	450W	A, A+, C, E, H	62.0109	323.00	**387.60**
1188mm	374	1276	693	2364	600W	A, A+, C, E, H	62.0110	357.00	**428.40**
1262mm	398	1358	737	2514	600W	A, A+, C, E, H	62.0111	376.00	**451.20**

800mm Height
Addington II Type 10 Vertical / Horizontal Radiators - Gloss White

Width	Delta △T30 Watts	Delta △T30 BTU	Delta △T50 Watts	Delta △T50 BTU	Element Output	Element Type	Code	£ Ex VAT	£ Inc VAT
522mm	210	717	396	1351	300W	A, A+, C, H	62.0112	219.00	**262.80**
596mm	240	819	452	1542	300W	A, A+, C, H	62.0113	243.00	**291.60**

1000mm Height
Addington II Type 10 Vertical / Horizontal Radiators - Gloss White

Width	Delta △T30 Watts	Delta △T30 BTU	Delta △T50 Watts	Delta △T50 BTU	Element Output	Element Type	Code	£ Ex VAT	£ Inc VAT
522mm	262	894	502	1712	300W	A, A+, C, H	62.0114	243.00	**291.60**
596mm	299	1020	574	1958	450W	A, A+, C, H	62.0115	266.00	**319.20**

1200mm Height
Addington II Type 10 Vertical / Horizontal Radiators - Gloss White

Width	Delta △T30 Watts	Delta △T30 BTU	Delta △T50 Watts	Delta △T50 BTU	Element Output	Element Type	Code	£ Ex VAT	£ Inc VAT
522mm	320	1092	625	2132	450W	A, A+, C, H	62.0116	266.00	**319.20**
596mm	366	1249	715	2439	450W	A+, C, H	62.0117	295.00	**354.00**

1400mm Height
Addington II Type 10 Vertical / Horizontal Radiators - Gloss White

Width	Delta △T30 Watts	Delta △T30 BTU	Delta △T50 Watts	Delta △T50 BTU	Element Output	Element Type	Code	£ Ex VAT	£ Inc VAT
522mm	387	1320	769	2623	450W	A+, C, H	62.0118	290.00	**348.00**
596mm	442	1508	879	2998	450W	A+, C, H	62.0119	323.00	**387.60**

1800mm Height
Addington II Type 10 Vertical / Horizontal Radiators - Gloss White

Width	Delta △T30 Watts	Delta △T30 BTU	Delta △T50 Watts	Delta △T50 BTU	Element Output	Element Type	Code	£ Ex VAT	£ Inc VAT
300mm	241	822	482	1644	N/A	N/A	62.0120	224.00	**268.80**
374mm	301	1027	602	2053	N/A	N/A	62.0121	262.00	**314.40**
448mm	361	1232	723	2466	450W	A, A+	62.0122	300.00	**360.00**
522mm	421	1436	843	2875	600W	A+	62.0123	338.00	**405.60**
596mm	481	1641	963	3284	600W	A+	62.0124	376.00	**451.20**
670mm	541	1845	1084	3697	600W	A+	62.0125	418.00	**501.60**

TECHNICAL INFORMATION

All measurements in Height by Width. Radiators that are electric only are restricted to the heat output of the elements. Element size can be increased to full capacity of rail if using element type C, E or H. For element types see pages 324-337. For matching valves see pages 338-353. Comes with pre-fitted flow diverter (except 500 & 600mm heights). Flow diverter must remain in place when radiator installed on central heating system (only for vertical installations). For indirect heating systems only. **In vertical installation**, tappings are the width of the rail and approx. 40mm off the wall. **In horizontal installation**, tappings are approx. 50mm less than the width of the rail and approx. 40mm off the wall. Price includes radiator and wall fixing sets, valves extra. Cannot be used with dual fuel valves.

MAGNETIC TOWEL HANGERS

Round Magnetic Towel Hangers

Size	Colour	Code	£ Ex VAT	£ Inc VAT
600mm	Gloss White	101.0071	96.00	**115.20**
600mm	Chrome	101.0072	102.00	**122.40**

Square Magnetic Towel Hangers

Size	Colour	Code	£ Ex VAT	£ Inc VAT
600mm	Gloss White	101.0073	97.00	**116.40**
600mm	Chrome	101.0074	109.00	**130.80**

Both Round & Square towel hangers come in three unassembled pieces.
Please cut 600mm bar to required column-to-column length.
Holds up to 5kg weight.

Designer Range

ADDINGTON II TYPE 10 - MATT ANTHRACITE

Warranty 5 Year

Heating

All Electric

Dual-Fuel

HEATING NOTE: Radiators that are electric only are restricted to the heat output of the elements.

Pictured 62.0150 Matt Anthracite with 91.0088 x 2 Towel Hanger

Transform your space with the sleek and contemporary Addington II Type 10 radiator. Designed to complement modern interiors, it's slim profile and clean flat panels make it a perfect choice for saving space while adding a touch of elegance. Finished in durable powder coating with various colours, it's built to last and look good.

Bar Dimensions (mm)

Vertical Bars 70 x 11mm

Pictured 62.0142 Matt Anthracite

Towel Hangers
Page 164-165

Pictured 62.0136 Matt Anthracite

Designer Range

ADDINGTON II TYPE 10 - MATT ANTHRACITE

FEATURES
- Tested to BS EN 442 standards
- Can be installed vertically or horizontally
- Can be single, dual fuel or all electric (not all sizes)
- 5 Year Manufacturer's Warranty*

* With conditions

Technical Tables & Drawings
Page 400-401

Pictured 62.0143 Matt Anthracite (Fitted Horizontally)

500mm Height
Addington II Type 10 Vertical / Horizontal Radiators - Matt Anthracite

Width	Delta △T30 Watts	Delta △T30 BTU	Delta △T50 Watts	Delta △T50 BTU	Element Output	Element Type	Code	£ Ex VAT	£ Inc VAT
522mm	142	485	261	891	150W	A, A+, C, E, H	62.0126	186.00	**223.20**
596mm	163	556	298	1017	150W	A, A+, C, E, H	62.0127	200.00	**240.00**

600mm Height
Addington II Type 10 Vertical / Horizontal Radiators - Matt Anthracite

Width	Delta △T30 Watts	Delta △T30 BTU	Delta △T50 Watts	Delta △T50 BTU	Element Output	Element Type	Code	£ Ex VAT	£ Inc VAT
300mm	94	321	173	590	150W	A, A+	62.0128	143.00	**171.60**
374mm	117	399	217	740	150W	A, A+	62.0129	162.00	**194.40**
448mm	140	478	260	887	150W	A, A+, C, E, H	62.0130	176.00	**211.20**
522mm	164	560	303	1034	150W	A, A+, C, E, H	62.0131	195.00	**234.00**
596mm	187	638	347	1184	300W	A, A+, C, E, H	62.0132	214.00	**256.80**
670mm	211	720	390	1330	300W	A, A+, C, E, H	62.0133	233.00	**279.60**
818mm	257	877	477	1627	450W	A, A+, C, E, H	62.0134	266.00	**319.20**
1040mm	328	1119	607	2070	450W	A, A+, C, E, H	62.0135	323.00	**387.60**
1188mm	374	1276	693	2364	600W	A, A+, C, E, H	62.0136	357.00	**428.40**
1262mm	398	1358	737	2514	600W	A, A+, C, E, H	62.0137	376.00	**451.20**

800mm Height
Addington II Type 10 Vertical / Horizontal Radiators - Matt Anthracite

Width	Delta △T30 Watts	Delta △T30 BTU	Delta △T50 Watts	Delta △T50 BTU	Element Output	Element Type	Code	£ Ex VAT	£ Inc VAT
522mm	210	717	396	1351	300W	A, A+, C, H	62.0138	219.00	**262.80**
596mm	240	819	452	1542	300W	A, A+, C, H	62.0139	243.00	**291.60**

1000mm Height
Addington II Type 10 Vertical / Horizontal Radiators - Matt Anthracite

Width	Delta △T30 Watts	Delta △T30 BTU	Delta △T50 Watts	Delta △T50 BTU	Element Output	Element Type	Code	£ Ex VAT	£ Inc VAT
522mm	262	894	502	1712	300W	A, A+, C, H	62.0140	243.00	**291.60**
596mm	299	1020	574	1958	450W	A, A+, C, H	62.0141	266.00	**319.20**

1200mm Height
Addington II Type 10 Vertical / Horizontal Radiators - Matt Anthracite

Width	Delta △T30 Watts	Delta △T30 BTU	Delta △T50 Watts	Delta △T50 BTU	Element Output	Element Type	Code	£ Ex VAT	£ Inc VAT
522mm	320	1092	625	2132	450W	A, A+, C, H	62.0142	266.00	**319.20**
596mm	366	1249	715	2439	450W	A+, C, H	62.0143	295.00	**354.00**

1400mm Height
Addington II Type 10 Vertical / Horizontal Radiators - Matt Anthracite

Width	Delta △T30 Watts	Delta △T30 BTU	Delta △T50 Watts	Delta △T50 BTU	Element Output	Element Type	Code	£ Ex VAT	£ Inc VAT
522mm	387	1320	769	2623	450W	A+, C, H	62.0144	290.00	**348.00**
596mm	442	1508	879	2998	450W	A+, C, H	62.0145	323.00	**387.60**

1800mm Height
Addington II Type 10 Vertical / Horizontal Radiators - Matt Anthracite

Width	Delta △T30 Watts	Delta △T30 BTU	Delta △T50 Watts	Delta △T50 BTU	Element Output	Element Type	Code	£ Ex VAT	£ Inc VAT
300mm	241	822	482	1644	N/A	N/A	62.0146	224.00	**268.80**
374mm	301	1027	602	2053	N/A	N/A	62.0147	262.00	**314.40**
448mm	361	1232	723	2466	450W	A, A+	62.0148	300.00	**360.00**
522mm	421	1436	843	2875	600W	A+	62.0149	338.00	**405.60**
596mm	481	1641	963	3284	600W	A+	62.0150	376.00	**451.20**
670mm	541	1845	1084	3697	600W	A+	62.0151	418.00	**501.60**

Single profile construction

Radiator can be installed vertically or horizontally using the pre-fitted wall bracket holders. (Below images)

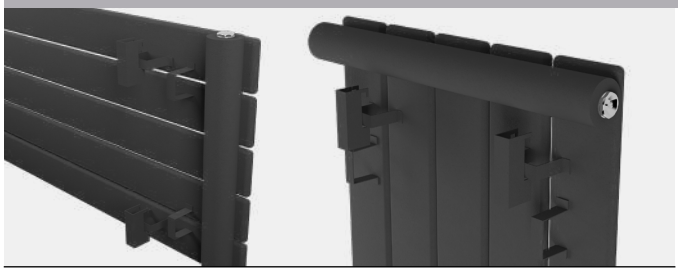

TECHNICAL INFORMATION

All measurements in Height by Width. Radiators that are electric only are restricted to the heat output of the elements. Element size can be increased to full capacity of rail if using element type C, E or H. For element types see pages 324-337. For matching valves see pages 338-353. Comes with pre-fitted flow diverter (except 500 & 600mm heights). Flow diverter must remain in place when radiator installed on central heating system (only for vertical installations). For indirect heating systems only. **In vertical installation**, tappings are the width of the rail and approx. 40mm off the wall. **In horizontal installation**, tappings are approx. 50mm less than the width of the rail and approx. 40mm off the wall. Price includes radiator and wall fixing sets, valves extra. Cannot be used with dual fuel valves.

MAGNETIC TOWEL HANGERS

Round Magnetic Towel Hangers

Size	Colour	Code	£ Ex VAT	£ Inc VAT
600mm	Gloss White	101.0071	96.00	**115.20**
600mm	Chrome	101.0072	102.00	**122.40**

Square Magnetic Towel Hangers

Size	Colour	Code	£ Ex VAT	£ Inc VAT
600mm	Gloss White	101.0073	97.00	**116.40**
600mm	Chrome	101.0074	109.00	**130.80**

Both Round & Square towel hangers come in three unassembled pieces.
Please cut 600mm bar to required column-to-column length.
Holds up to 5kg weight.

Designer Range

ADDINGTON II TYPE 10 - MATT BLACK

Warranty 5 Year

Heating

All Electric

Dual-Fuel

HEATING NOTE: Radiators that are electric only are restricted to the heat output of the elements.

Pictured 62.0177 Matt Black

Transform your space with the sleek and contemporary Addington II Type 10 radiator. Designed to complement modern interiors, it's slim profile and clean flat panels make it a perfect choice for saving space while adding a touch of elegance. Finished in durable powder coating with various colours, it's built to last and look good.

Bar Dimensions (mm)

Vertical Bars 70 x 11mm

Pictured 62.0167 Matt Black with 91.0093 Towel Hanger

Towel Hangers
Page 164-165

Pictured 62.0160 Matt Black

Designer Range

ADDINGTON II TYPE 10 - MATT BLACK

FEATURES
- Tested to BS EN 442 standards
- Can be installed vertically or horizontally
- Can be single, dual fuel or all electric (not all sizes)
- 5 Year Manufacturer's Warranty*

* With conditions

Technical Tables & Drawings
Page 400-401

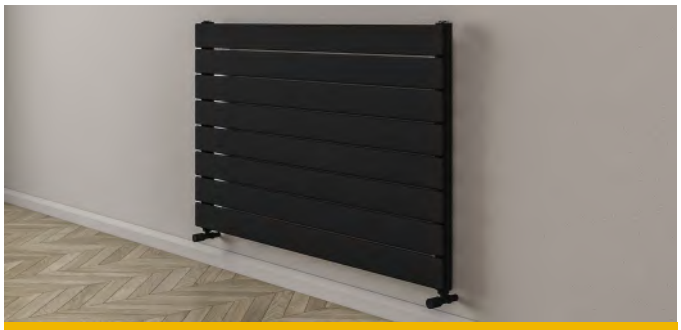

Pictured 62.0167 Matt Black (Fitted Horizontally)

500mm Height
Addington II Type 10 Vertical / Horizontal Radiators - Matt Black

Width	Delta △T30 Watts	Delta △T30 BTU	Delta △T50 Watts	Delta △T50 BTU	Element Output	Element Type	Code	£ Ex VAT	£ Inc VAT
522mm	142	485	261	891	150W	A, A+, C, E, H	62.0152	186.00	**223.20**
596mm	163	556	298	1017	150W	A, A+, C, E, H	62.0153	200.00	**240.00**

600mm Height
Addington II Type 10 Vertical / Horizontal Radiators - Matt Black

Width	Delta △T30 Watts	Delta △T30 BTU	Delta △T50 Watts	Delta △T50 BTU	Element Output	Element Type	Code	£ Ex VAT	£ Inc VAT
300mm	94	321	173	590	150W	A, A+	62.0154	143.00	**171.60**
374mm	117	399	217	740	150W	A, A+	62.0155	162.00	**194.40**
448mm	140	478	260	887	150W	A, A+, C, E, H	62.0156	176.00	**211.20**
522mm	164	560	303	1034	150W	A, A+, C, E, H	62.0157	195.00	**234.00**
596mm	187	638	347	1184	300W	A, A+, C, E, H	62.0158	214.00	**256.80**
670mm	211	720	390	1330	300W	A, A+, C, E, H	62.0159	233.00	**279.60**
818mm	257	877	477	1627	450W	A, A+, C, E, H	62.0160	266.00	**319.20**
1040mm	328	1119	607	2070	450W	A, A+, C, E, H	62.0161	323.00	**387.60**
1188mm	374	1276	693	2364	600W	A, A+, C, E, H	62.0162	357.00	**428.40**
1262mm	398	1358	737	2514	600W	A, A+, C, E, H	62.0163	376.00	**451.20**

800mm Height
Addington II Type 10 Vertical / Horizontal Radiators - Matt Black

Width	Delta △T30 Watts	Delta △T30 BTU	Delta △T50 Watts	Delta △T50 BTU	Element Output	Element Type	Code	£ Ex VAT	£ Inc VAT
522mm	210	717	396	1351	300W	A, A+, C, H	62.0164	219.00	**262.80**
596mm	240	819	452	1542	300W	A, A+, C, H	62.0165	243.00	**291.60**

1000mm Height
Addington II Type 10 Vertical / Horizontal Radiators - Matt Black

Width	Delta △T30 Watts	Delta △T30 BTU	Delta △T50 Watts	Delta △T50 BTU	Element Output	Element Type	Code	£ Ex VAT	£ Inc VAT
522mm	262	894	502	1712	300W	A, A+, C, H	62.0166	243.00	**291.60**
596mm	299	1020	574	1958	450W	A, A+, C, H	62.0167	266.00	**319.20**

1200mm Height
Addington II Type 10 Vertical / Horizontal Radiators - Matt Black

Width	Delta △T30 Watts	Delta △T30 BTU	Delta △T50 Watts	Delta △T50 BTU	Element Output	Element Type	Code	£ Ex VAT	£ Inc VAT
522mm	320	1092	625	2132	450W	A, A+, C, H	62.0168	266.00	**319.20**
596mm	366	1249	715	2439	450W	A+, C, H	62.0169	295.00	**354.00**

1400mm Height
Addington II Type 10 Vertical / Horizontal Radiators - Matt Black

Width	Delta △T30 Watts	Delta △T30 BTU	Delta △T50 Watts	Delta △T50 BTU	Element Output	Element Type	Code	£ Ex VAT	£ Inc VAT
522mm	387	1320	769	2623	450W	A+, C, H	62.0170	290.00	**348.00**
596mm	442	1508	879	2998	450W	A+, C, H	62.0171	323.00	**387.60**

1800mm Height
Addington II Type 10 Vertical / Horizontal Radiators - Matt Black

Width	Delta △T30 Watts	Delta △T30 BTU	Delta △T50 Watts	Delta △T50 BTU	Element Output	Element Type	Code	£ Ex VAT	£ Inc VAT
300mm	241	822	482	1644	N/A	N/A	62.0172	224.00	**268.80**
374mm	301	1027	602	2053	N/A	N/A	62.0173	262.00	**314.40**
448mm	361	1232	723	2466	450W	A, A+	62.0174	300.00	**360.00**
522mm	421	1436	843	2875	600W	A+	62.0175	338.00	**405.60**
596mm	481	1641	963	3284	600W	A+	62.0176	376.00	**451.20**
670mm	541	1845	1084	3697	600W	A+	62.0177	418.00	**501.60**

Single profile construction

Radiator can be installed vertically or horizontally using the pre-fitted wall bracket holders. (Below images)

TECHNICAL INFORMATION

All measurements in Height by Width. Radiators that are electric only are restricted to the heat output of the elements. Element size can be increased to full capacity of rail if using element type C, E or H. For element types see pages 324-337. For matching valves see pages 338-353. Comes with pre-fitted flow diverter (except 500 & 600mm heights). Flow diverter must remain in place when radiator installed on central heating system (only for vertical installations). For indirect heating systems only. **In vertical installation**, tappings are the width of the rail and approx. 40mm off the wall. **In horizontal installation**, tappings are approx. 50mm less than the width of the rail and approx. 40mm off the wall. Price includes radiator and wall fixing sets, valves extra. Cannot be used with dual fuel valves.

MAGNETIC TOWEL HANGERS

Round Magnetic Towel Hangers

Size	Colour	Code	£ Ex VAT	£ Inc VAT
600mm	Gloss White	101.0071	96.00	**115.20**
600mm	Chrome	101.0072	102.00	**122.40**

Square Magnetic Towel Hangers

Size	Colour	Code	£ Ex VAT	£ Inc VAT
600mm	Gloss White	101.0073	97.00	**116.40**
600mm	Chrome	101.0074	109.00	**130.80**

Both Round & Square towel hangers come in three unassembled pieces.
Please cut 600mm bar to required column-to-column length.
Holds up to 5kg weight.

Designer Range

ADDINGTON II TYPE 10 - CHROME

Warranty
5
Year

Heating

All Electric

Dual-Fuel

HEATING NOTE: Radiators that are electric only are restricted to the heat output of the elements.

Pictured 62.0200 Chrome with 91.0091 Towel Hanger

Transform your space with the sleek and contemporary Addington II Type 10 radiator. Designed to complement modern interiors, it's slim profile and clean flat panels make it a perfect choice for saving space while adding a touch of elegance. Finished in stunning chrome, it's built to last and look good.

Bar Dimensions (mm)

Vertical Bars 70 x 11mm

Pictured 62.0195 Chrome

Towel Hangers
Page 164-165

Pictured 62.0180 Chrome

Designer Range

ADDINGTON II TYPE 10 - CHROME

FEATURES
- Tested to BS EN 442 standards
- Can be installed vertically or horizontally
- Can be single, dual fuel or all electric (not all sizes)
- 5 Year Manufacturer's Warranty*

* With conditions

Technical Tables & Drawings
Page 400-401

Pictured 62.0190 Chrome (Fitted Horizontally)

Single profile construction

Radiator can be installed vertically or horizontally using the pre-fitted wall bracket holders. (Below images)

500mm Height
Addington II Type 10 Vertical / Horizontal Radiators - Chrome

Width	Delta △T30 Watts	Delta △T30 BTU	Delta △T50 Watts	Delta △T50 BTU	Element Output	Element Type	Code	£ Ex VAT	£ Inc VAT
522mm	78	266	157	536	150W	A, A+, C, E, H	62.0178	260.00	**312.00**
596mm	90	307	180	614	150W	A, A+, C, E, H	62.0179	280.00	**336.00**

600mm Height
Addington II Type 10 Vertical / Horizontal Radiators - Chrome

Width	Delta △T30 Watts	Delta △T30 BTU	Delta △T50 Watts	Delta △T50 BTU	Element Output	Element Type	Code	£ Ex VAT	£ Inc VAT
300mm	52	178	105	359	150W	A, A+	62.0180	200.00	**240.00**
374mm	65	222	131	447	150W	A, A+	62.0181	227.00	**272.40**
448mm	78	266	157	536	150W	A, A+, C, E, H	62.0182	247.00	**296.40**
522mm	91	311	183	625	150W	A, A+, C, E, H	62.0183	273.00	**327.60**
596mm	104	355	210	717	300W	A, A+, C, E, H	62.0184	300.00	**360.00**
670mm	117	399	236	805	300W	A, A+, C, E, H	62.0185	326.00	**391.20**
818mm	143	488	288	983	450W	A, A+, C, E, H	62.0186	373.00	**447.60**
1040mm	182	621	367	1252	450W	A, A+, C, E, H	62.0187	453.00	**543.60**
1188mm	208	710	419	1429	600W	A, A+, C, E, H	62.0188	499.00	**598.80**
1262mm	221	754	446	1521	600W	A, A+, C, E, H	62.0189	526.00	**631.20**

800mm Height
Addington II Type 10 Vertical / Horizontal Radiators - Chrome

Width	Delta △T30 Watts	Delta △T30 BTU	Delta △T50 Watts	Delta △T50 BTU	Element Output	Element Type	Code	£ Ex VAT	£ Inc VAT
522mm	116	396	235	802	300W	A, A+, C, H	62.0190	306.00	**367.20**
596mm	133	454	268	914	300W	A, A+, C, H	62.0191	340.00	**408.00**

1000mm Height
Addington II Type 10 Vertical / Horizontal Radiators - Chrome

Width	Delta △T30 Watts	Delta △T30 BTU	Delta △T50 Watts	Delta △T50 BTU	Element Output	Element Type	Code	£ Ex VAT	£ Inc VAT
522mm	141	481	286	976	300W	A, A+, C, H	62.0192	340.00	**408.00**
596mm	161	550	327	1116	450W	A, A+, C, H	62.0193	373.00	**447.60**

1200mm Height
Addington II Type 10 Vertical / Horizontal Radiators - Chrome

Width	Delta △T30 Watts	Delta △T30 BTU	Delta △T50 Watts	Delta △T50 BTU	Element Output	Element Type	Code	£ Ex VAT	£ Inc VAT
522mm	166	567	338	1153	450W	A, A+, C, H	62.0194	373.00	**447.60**
596mm	190	648	386	1317	450W	A+, C, H	62.0195	413.00	**495.60**

1400mm Height
Addington II Type 10 Vertical / Horizontal Radiators - Chrome

Width	Delta △T30 Watts	Delta △T30 BTU	Delta △T50 Watts	Delta △T50 BTU	Element Output	Element Type	Code	£ Ex VAT	£ Inc VAT
522mm	191	652	390	1330	450W	A+, C, H	62.0196	406.00	**487.20**
596mm	219	747	446	1521	450W	A+, C, H	62.0197	453.00	**543.60**

1800mm Height
Addington II Type 10 Vertical / Horizontal Radiators - Chrome

Width	Delta △T30 Watts	Delta △T30 BTU	Delta △T50 Watts	Delta △T50 BTU	Element Output	Element Type	Code	£ Ex VAT	£ Inc VAT
300mm	141	481	314	1071	N/A	N/A	62.0198	313.00	**375.60**
374mm	176	601	393	1341	N/A	N/A	62.0199	366.00	**439.20**
448mm	212	723	471	1607	450W	A, A+	62.0200	419.00	**502.80**
522mm	247	843	550	1876	600W	A+	62.0201	473.00	**567.60**
596mm	282	962	629	2145	600W	A+	62.0202	526.00	**631.20**
670mm	318	1085	707	2411	600W	A+	62.0203	586.00	**703.20**

TECHNICAL INFORMATION

All measurements in Height by Width. Radiators that are electric only are restricted to the heat output of the elements. Element size can be increased to full capacity of rail if using element type C, E or H. For element types see pages 324-337. For matching valves see pages 338-353. Comes with pre-fitted flow diverter (except 500 & 600mm heights). Flow diverter must remain in place when radiator installed on central heating system (only for vertical installations). For indirect heating systems only. **In vertical installation**, tappings are the width of the rail and approx. 40mm off the wall. **In horizontal installation**, tappings are approx. 50mm less than the width of the rail and approx. 40mm off the wall. Price includes radiator and wall fixing sets, valves extra. Cannot be used with dual fuel valves.

MAGNETIC TOWEL HANGERS

Round Magnetic Towel Hangers

Size	Colour	Code	£ Ex VAT	£ Inc VAT
600mm	Gloss White	101.0071	96.00	**115.20**
600mm	Chrome	101.0072	102.00	**122.40**

Square Magnetic Towel Hangers

Size	Colour	Code	£ Ex VAT	£ Inc VAT
600mm	Gloss White	101.0073	97.00	**116.40**
600mm	Chrome	101.0074	109.00	**130.80**

Both Round & Square towel hangers come in three unassembled pieces.
Please cut 600mm bar to required column-to-column length.
Holds up to 5kg weight.

• NEW SIZES HERE •

Designer Range

ADDINGTON TYPE 10
ADDINGTON ALUMINIUM TYPE 10
SINGLE FLAT STYLE TOWEL HANGERS

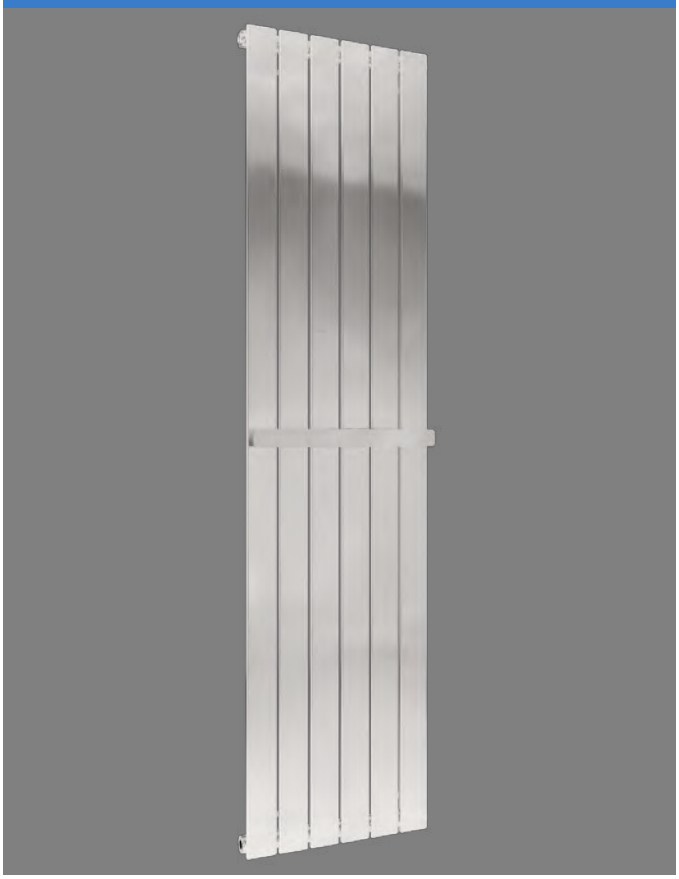

Type10 - Single Flat Style Towel Hangers - Chrome

Description	Code	£ Ex VAT	£ Inc VAT
Towel Hanger 292mm (for 300mm Width radiator)	91.0089	98.00	**117.60**
Towel Hanger 366mm (for 374mm Width radiator)	91.0090	100.00	**120.00**
Towel Hanger 440mm (for 448mm Width radiator)	91.0091	102.00	**122.40**
Towel Hanger 514mm (for 522mm Width radiator)	91.0092	103.00	**123.60**
Towel Hanger 588mm (for 596mm Width radiator)	91.0093	107.00	**128.40**
Towel Hanger 662mm (for 670mm Width radiator)	101.0138	111.00	**133.20**

TECHNICAL DETAILS

The Single Flat Style Towel Hanger is compatible with both **vertical and horizontal installation**. Towel hanger material is steel.

MUST BE FITTED BEFORE INSTALLATION!

Radiators projection from wall 119mm when towel hangers is fitted.

Hanger Fitting Widths
148/222/296/370/444/518mm

Installation Note: Single Flat Style Towel Hangers are not compatible with Deddington Vertical & Deddington Horizontal radiators.

ADDINGTON TYPE 10
ADDINGTON ALUMINIUM TYPE 10
DOUBLE FLAT STYLE TOWEL HANGERS

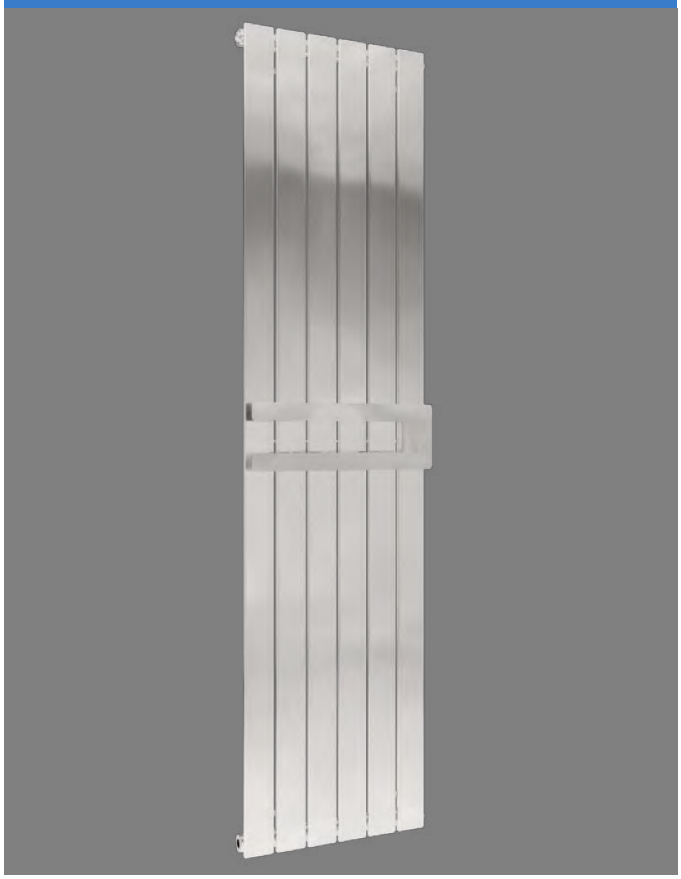

Type10 - Double Flat Style Towel Hangers - Chrome

Description	Code	£ Ex VAT	£ Inc VAT
Towel Hanger 292mm (for 300mm Width radiator)	91.0109	124.00	**148.80**
Towel Hanger 366mm (for 374mm Width radiator)	91.0110	130.00	**156.00**
Towel Hanger 440mm (for 448mm Width radiator)	91.0111	132.00	**158.40**
Towel Hanger 514mm (for 522mm Width radiator)	91.0112	135.00	**162.00**
Towel Hanger 588mm (for 596mm Width radiator)	91.0113	138.00	**165.60**
Towel Hanger 662mm (for 670mm Width radiator)	101.0167	143.00	**171.60**

TECHNICAL DETAILS

The Double Flat Style Towel Hanger is compatible with **vertical installation only**. Towel hanger material is steel.

MUST BE FITTED BEFORE INSTALLATION!

Radiators projection from wall 119mm when towel hangers is fitted.

Hanger Fitting Widths
148/222/296/370/444/518mm

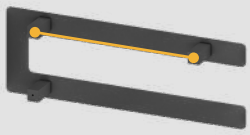

Installation Note: Double Flat Style Towel Hangers are not compatible with Deddington Vertical & Deddington Horizontal radiators.

Designer Range

ADDINGTON TYPE 10
ADDINGTON ALUMINIUM TYPE 10
SINGLE FLAT STYLE TOWEL HANGERS

Type 10 - Single Flat Style Towel Hangers - Gloss White

Description	Code	£ Ex VAT	£ Inc VAT
Towel Hanger 292mm (for 300mm Width radiator)	91.0079	65.00	**78.00**
Towel Hanger 366mm (for 374mm Width radiator)	91.0080	66.00	**79.20**
Towel Hanger 440mm (for 448mm Width radiator)	91.0081	67.00	**80.40**
Towel Hanger 514mm (for 522mm Width radiator)	91.0082	69.00	**82.80**
Towel Hanger 588mm (for 596mm Width radiator)	91.0083	69.00	**82.80**
Towel Hanger 662mm (for 670mm Width radiator)	101.0120	75.00	**90.00**

Type10 - Single Flat Style Towel Hangers - Matt Anthracite

Description	Code	£ Ex VAT	£ Inc VAT
Towel Hanger 292mm (for 300mm Width radiator)	91.0084	65.00	**78.00**
Towel Hanger 366mm (for 374mm Width radiator)	91.0085	66.00	**79.20**
Towel Hanger 440mm (for 448mm Width radiator)	91.0086	67.00	**80.40**
Towel Hanger 514mm (for 522mm Width radiator)	91.0087	69.00	**82.80**
Towel Hanger 588mm (for 596mm Width radiator)	91.0088	69.00	**82.80**
Towel Hanger 662mm (for 670mm Width radiator)	101.0126	75.00	**90.00**

Type10 - Single Flat Style Towel Hangers - Matt Black

Description	Code	£ Ex VAT	£ Inc VAT
Towel Hanger 292mm (for 300mm Width radiator)	101.0127	65.00	**78.00**
Towel Hanger 366mm (for 374mm Width radiator)	101.0128	66.00	**79.20**
Towel Hanger 440mm (for 448mm Width radiator)	101.0129	67.00	**80.40**
Towel Hanger 514mm (for 522mm Width radiator)	101.0130	69.00	**82.80**
Towel Hanger 588mm (for 596mm Width radiator)	101.0131	69.00	**82.80**
Towel Hanger 662mm (for 670mm Width radiator)	101.0132	75.00	**90.00**

ADDINGTON TYPE 10
ADDINGTON ALUMINIUM TYPE 10
DOUBLE FLAT STYLE TOWEL HANGERS

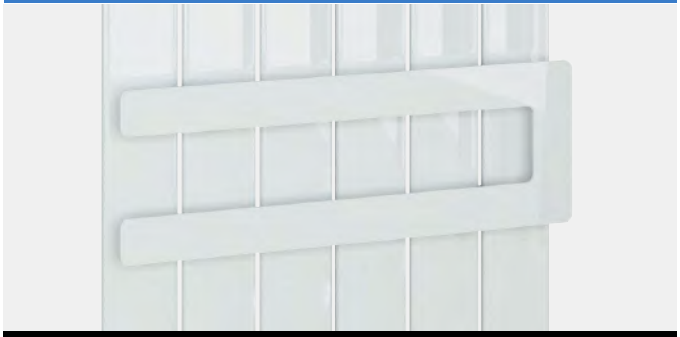

Type 10 - Double Flat Style Towel Hangers - Gloss White

Description	Code	£ Ex VAT	£ Inc VAT
Towel Hanger 292mm (for 300mm Width radiator)	91.0099	79.00	**94.80**
Towel Hanger 366mm (for 374mm Width radiator)	91.0100	81.00	**97.20**
Towel Hanger 440mm (for 448mm Width radiator)	91.0101	84.00	**100.80**
Towel Hanger 514mm (for 522mm Width radiator)	91.0102	86.00	**103.20**
Towel Hanger 588mm (for 596mm Width radiator)	91.0103	88.00	**105.60**
Towel Hanger 662mm (for 670mm Width radiator)	101.0149	95.00	**114.00**

Type 10 - Double Flat Style Towel Hangers - Matt Anthracite

Description	Code	£ Ex VAT	£ Inc VAT
Towel Hanger 292mm (for 300mm Width radiator)	91.0104	79.00	**94.80**
Towel Hanger 366mm (for 374mm Width radiator)	91.0105	81.00	**97.20**
Towel Hanger 440mm (for 448mm Width radiator)	91.0106	84.00	**100.80**
Towel Hanger 514mm (for 522mm Width radiator)	91.0107	86.00	**103.20**
Towel Hanger 588mm (for 596mm Width radiator)	91.0108	88.00	**105.60**
Towel Hanger 662mm (for 670mm Width radiator)	101.0155	95.00	**114.00**

Type 10 - Double Flat Style Towel Hangers - Matt Black

Description	Code	£ Ex VAT	£ Inc VAT
Towel Hanger 292mm (for 300mm Width radiator)	101.0156	79.00	**94.80**
Towel Hanger 366mm (for 374mm Width radiator)	101.0157	81.00	**97.20**
Towel Hanger 440mm (for 448mm Width radiator)	101.0158	84.00	**100.80**
Towel Hanger 514mm (for 522mm Width radiator)	101.0159	86.00	**103.20**
Towel Hanger 588mm (for 596mm Width radiator)	101.0160	88.00	**105.60**
Towel Hanger 662mm (for 670mm Width radiator)	101.0161	95.00	**114.00**

Designer Range

ADDINGTON II TYPE 20 - GLOSS WHITE

Pictured 62.0216 Gloss White

Bar Dimensions (mm)

Vertical Bars 70 x 11mm

Pictured 62.0214 Gloss White

HEATING NOTE: Radiators that are electric only are restricted to the heat output of the elements.

Pictured 62.0212 Gloss White

Designer Range

ADDINGTON II TYPE 20 - GLOSS WHITE

Bring warmth and style together with Addington II Type 20 designer radiator. Its double-panel design delivers powerful heat output, while the slim vertical build and smooth flat panels offer a clean, modern finish. Coated in a tough, long-lasting powder finish—perfect for contemporary spaces.

FEATURES
- Tested to BS EN 442 standards
- Double profile construction
- Maximum corrosion resistance
- Can be installed vertically or horizontally
- Can be single, dual fuel or all electric
- 5 Year Manufacturer's Warranty*

* With conditions

Technical Tables & Drawings
Page 402-403

Double profile construction

Radiator can be installed vertically or horizontally using the pre-fitted wall bracket holders. (Below images)

600mm Height

Addington II Type 20 Vertical / Horizontal Radiators - Gloss White

Width	Delta △T30 Watts	Delta △T30 BTU	Delta △T50 Watts	Delta △T50 BTU	Element Output	Element Type	Code	£ Ex VAT	£ Inc VAT
300mm	142	485	262	894	100W	A	62.0204	195.00	**234.00**
374mm	177	604	328	1119	300W	A, A+	62.0205	224.00	**268.80**
448mm	212	723	394	1344	300W	A, A+, C, E, H	62.0206	257.00	**308.40**
522mm	248	846	459	1566	450W	A, A+, C, E, H	62.0207	285.00	**342.00**
596mm	283	966	525	1791	450W	A, A+, C, E, H	62.0208	319.00	**382.80**
670mm	319	1088	590	2012	600W	A, A+, C, E, H	62.0209	352.00	**422.40**
818mm	389	1327	722	2463	600W	A, A+, C, E, H	62.0210	414.00	**496.80**
1040mm	496	1692	918	3131	900W	A, A+, C, E, H	62.0211	504.00	**604.80**
1188mm	566	1931	1050	3581	1000W	A, A+, C, E, H	62.0212	566.00	**679.20**
1262mm	602	2053	1115	3803	1000W	A, A+, C, E, H	62.0213	599.00	**718.80**

1800mm Height

Addington II Type 20 Vertical / Horizontal Radiators - Gloss White

Width	Delta △T30 Watts	Delta △T30 BTU	Delta △T50 Watts	Delta △T50 BTU	Element Output	Element Type	Code	£ Ex VAT	£ Inc VAT
300mm	383	1307	747	2548	N/A	N/A	62.0214	366.00	**439.20**
374mm	479	1634	934	3185	N/A	N/A	62.0215	447.00	**536.40**
448mm	575	1961	1121	3823	450W	A+	62.0216	532.00	**638.40**
522mm	671	2289	1308	4461	600W	A+	62.0217	613.00	**735.60**
596mm	766	2613	1494	5095	600W	A+	62.0218	699.00	**838.80**
670mm	862	2940	1681	5733	600W	A+	62.0219	784.00	**940.80**

TECHNICAL INFORMATION

All measurements in Height by Width. Radiators that are electric only are restricted to the heat output of the elements. Element size can be increased to full capacity of rail if using element type C, E or H. For element types see pages 324-337. For matching valves see pages 338-353. Comes with pre-fitted flow diverter (except 500 & 600mm heights). Flow diverter must remain in place when radiator installed on central heating system(only for vertical installations). For indirect heating systems only. **In vertical installation,** tappings are the width of the rail and approx. 63mm off the wall. **In horizontal installation,** tappings are approx. 50mm less than the width of the rail and approx. 63mm off the wall. Price includes radiator and wall fixing sets, valves extra. Cannot be used with dual fuel valves.

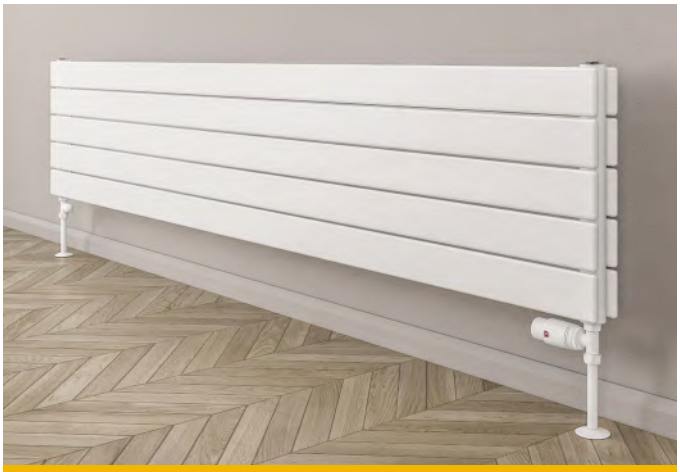

Pictured 62.0215 Gloss White (Fitted Horizontally)

MAGNETIC TOWEL HANGERS

Round Magnetic Towel Hangers

Size	Colour	Code	£ Ex VAT	£ Inc VAT
600mm	Gloss White	101.0071	96.00	**115.20**
600mm	Chrome	101.0072	102.00	**122.40**

Square Magnetic Towel Hangers

Size	Colour	Code	£ Ex VAT	£ Inc VAT
600mm	Gloss White	101.0073	97.00	**116.40**
600mm	Chrome	101.0074	109.00	**130.80**

Both Round & Square towel hangers come in three unassembled pieces.
Please cut 600mm bar to required column-to-column length.
Holds up to 5kg weight.

Round Vent Caps
Page 357

Designer Range

ADDINGTON II TYPE 20 - MATT ANTHRACITE

Pictured 62.0234 Matt Anthracite

Bar Dimensions (mm)

Vertical Bars 70 x 11mm

Pictured 62.0233 Matt Anthracite

HEATING NOTE: Radiators that are electric only are restricted to the heat output of the elements.

Pictured 62.0227 Matt Anthracite

Designer Range

ADDINGTON II TYPE 20 - MATT ANTHRACITE

Bring warmth and style together with Addington II Type 20 designer radiator. Its double-panel design delivers powerful heat output, while the slim vertical build and smooth flat panels offer a clean, modern finish. Coated in a tough, long-lasting powder finish—perfect for contemporary spaces.

FEATURES
- Tested to BS EN 442 standards
- Double profile construction
- Maximum corrosion resistance
- Can be installed vertically or horizontally
- Can be single, dual fuel or all electric
- 5 Year Manufacturer's Warranty*

* With conditions

Technical Tables & Drawings
Page 402-403

Double profile construction

Radiator can be installed vertically or horizontally using the pre-fitted wall bracket holders. (Below images)

600mm Height

Addington II Type 20 Vertical / Horizontal Radiators - Matt Anthracite

Width	Delta △T30 Watts	Delta △T30 BTU	Delta △T50 Watts	Delta △T50 BTU	Element Output	Element Type	Code	£ Ex VAT	£ Inc VAT
300mm	142	485	262	894	100W	A	62.0220	195.00	**234.00**
374mm	177	604	328	1119	300W	A, A+	62.0221	224.00	**268.80**
448mm	212	723	394	1344	300W	A, A+, C, E, H	62.0222	257.00	**308.40**
522mm	248	846	459	1566	450W	A, A+, C, E, H	62.0223	285.00	**342.00**
596mm	283	966	525	1791	450W	A, A+, C, E, H	62.0224	319.00	**382.80**
670mm	319	1088	590	2012	600W	A, A+, C, E, H	62.0225	352.00	**422.40**
818mm	389	1327	722	2463	600W	A, A+, C, E, H	62.0226	414.00	**496.80**
1040mm	496	1692	918	3131	900W	A, A+, C, E, H	62.0227	504.00	**604.80**
1188mm	566	1931	1050	3581	1000W	A, A+, C, E, H	62.0228	566.00	**679.20**
1262mm	602	2053	1115	3803	1000W	A, A+, C, E, H	62.0229	599.00	**718.80**

1800mm Height

Addington II Type 20 Vertical / Horizontal Radiators - Matt Anthracite

Width	Delta △T30 Watts	Delta △T30 BTU	Delta △T50 Watts	Delta △T50 BTU	Element Output	Element Type	Code	£ Ex VAT	£ Inc VAT
300mm	383	1307	747	2548	N/A	N/A	62.0230	366.00	**439.20**
374mm	479	1634	934	3185	N/A	N/A	62.0231	447.00	**536.40**
448mm	575	1961	1121	3823	450W	A+	62.0232	532.00	**638.40**
522mm	671	2289	1308	4461	600W	A+	62.0233	613.00	**735.60**
596mm	766	2613	1494	5095	600W	A+	62.0234	699.00	**838.80**
670mm	862	2940	1681	5733	600W	A+	62.0235	784.00	**940.80**

TECHNICAL INFORMATION

All measurements in Height by Width. Radiators that are electric only are restricted to the heat output of the elements. Element size can be increased to full capacity of rail if using element type C, E or H. For element types see pages 324-337. For matching valves see pages 338-353. Comes with pre-fitted flow diverter (except 500 & 600mm heights). Flow diverter must remain in place when radiator installed on central heating system(only for vertical installations). For indirect heating systems only. **In vertical installation,** tappings are the width of the rail and approx. 63mm off the wall. **In horizontal installation,** tappings are approx. 50mm less than the width of the rail and approx. 63mm off the wall. Price includes radiator and wall fixing sets, valves extra. Cannot be used with dual fuel valves.

Pictured 62.00231 Matt Anthracite (Fitted Horizontally)

MAGNETIC TOWEL HANGERS

Round Magnetic Towel Hangers

Size	Colour	Code	£ Ex VAT	£ Inc VAT
600mm	Gloss White	101.0071	96.00	**115.20**
600mm	Chrome	101.0072	102.00	**122.40**

Square Magnetic Towel Hangers

Size	Colour	Code	£ Ex VAT	£ Inc VAT
600mm	Gloss White	101.0073	97.00	**116.40**
600mm	Chrome	101.0074	109.00	**130.80**

Both Round & Square towel hangers come in three unassembled pieces.
Please cut 600mm bar to required column-to-column length.
Holds up to 5kg weight.

Round Vent Caps
Page 357

Designer Range

ADDINGTON II TYPE 20 - MATT BLACK

Pictured 62.0247 Matt Black with 101.0072 Towel Hanger

Bar Dimensions (mm)

Vertical Bars 70 x 11mm

Pictured 62.0249 Matt Black

HEATING NOTE: Radiators that are electric only are restricted to the heat output of the elements.

Pictured 62.0240 Matt Black

Designer Range

ADDINGTON II TYPE 20 - MATT BLACK

Bring warmth and style together with Addington II Type 20 designer radiator. Its double-panel design delivers powerful heat output, while the slim vertical build and smooth flat panels offer a clean, modern finish. Coated in a tough, long-lasting powder finish—perfect for contemporary spaces.

FEATURES
- Tested to BS EN 442 standards
- Double profile construction
- Maximum corrosion resistance
- Can be installed vertically or horizontally
- Can be single, dual fuel or all electric
- 5 Year Manufacturer's Warranty*

* With conditions

Technical Tables & Drawings
Page 402-403

Double profile construction

Radiator can be installed vertically or horizontally using the pre-fitted wall bracket holders. (Below images)

600mm Height

Addington II Type 20 Vertical / Horizontal Radiators - Matt Black

Width	Delta △T30 Watts	Delta △T30 BTU	Delta △T50 Watts	Delta △T50 BTU	Element Output	Element Type	Code	£ Ex VAT	£ Inc VAT
300mm	142	485	262	894	100W	A	62.0236	195.00	**234.00**
374mm	177	604	328	1119	300W	A, A+	62.0237	224.00	**268.80**
448mm	212	723	394	1344	300W	A, A+, C, E, H	62.0238	257.00	**308.40**
522mm	248	846	459	1566	450W	A, A+, C, E, H	62.0239	285.00	**342.00**
596mm	283	966	525	1791	450W	A, A+, C, E, H	62.0240	319.00	**382.80**
670mm	319	1088	590	2012	600W	A, A+, C, E, H	62.0241	352.00	**422.40**
818mm	389	1327	722	2463	600W	A, A+, C, E, H	62.0242	414.00	**496.80**
1040mm	496	1692	918	3131	900W	A, A+, C, E, H	62.0243	504.00	**604.80**
1188mm	566	1931	1050	3581	1000W	A, A+, C, E, H	62.0244	566.00	**679.20**
1262mm	602	2053	1115	3803	1000W	A, A+, C, E, H	62.0245	599.00	**718.80**

1800mm Height

Addington II Type 20 Vertical / Horizontal Radiators - Matt Black

Width	Delta △T30 Watts	Delta △T30 BTU	Delta △T50 Watts	Delta △T50 BTU	Element Output	Element Type	Code	£ Ex VAT	£ Inc VAT
300mm	383	1307	747	2548	N/A	N/A	62.0246	366.00	**439.20**
374mm	479	1634	934	3185	N/A	N/A	62.0247	447.00	**536.40**
448mm	575	1961	1121	3823	450W	A+	62.0248	532.00	**638.40**
522mm	671	2289	1308	4461	600W	A+	62.0249	613.00	**735.60**
596mm	766	2613	1494	5095	600W	A+	62.0250	699.00	**838.80**
670mm	862	2940	1681	5733	600W	A+	62.0251	784.00	**940.80**

TECHNICAL INFORMATION

All measurements in Height by Width. Radiators that are electric only are restricted to the heat output of the elements. Element size can be increased to full capacity of rail if using element type C, E or H. For element types see pages 324-337. For matching valves see pages 338-353. Comes with pre-fitted flow diverter (except 500 & 600mm heights). Flow diverter must remain in place when radiator installed on central heating system(only for vertical installations). For indirect heating systems only. **In vertical installation,** tappings are the width of the rail and approx. 63mm off the wall. **In horizontal installation,** tappings are approx. 50mm less than the width of the rail and approx. 63mm off the wall. Price includes radiator and wall fixing sets, valves extra. Cannot be used with dual fuel valves.

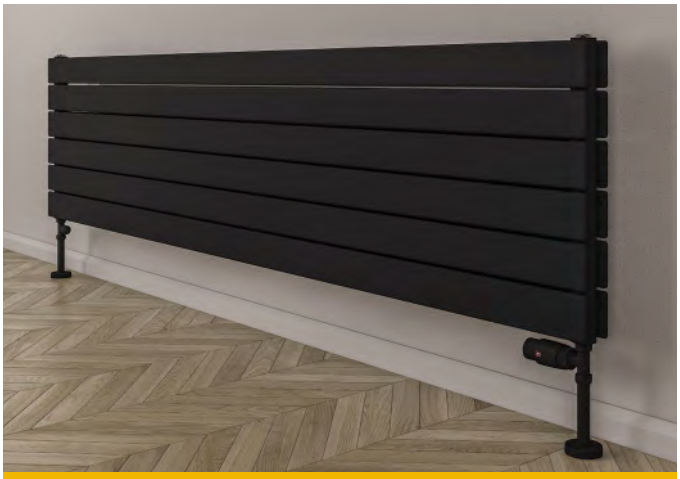

Pictured 62.0248 Matt Black (Fitted Horizontally)

MAGNETIC TOWEL HANGERS

Round Magnetic Towel Hangers

Size	Colour	Code	£ Ex VAT	£ Inc VAT
600mm	Gloss White	101.0071	96.00	**115.20**
600mm	Chrome	101.0072	102.00	**122.40**

Square Magnetic Towel Hangers

Size	Colour	Code	£ Ex VAT	£ Inc VAT
600mm	Gloss White	101.0073	97.00	**116.40**
600mm	Chrome	101.0074	109.00	**130.80**

Both Round & Square towel hangers come in three unassembled pieces.
Please cut 600mm bar to required column-to-column length.
Holds up to 5kg weight.

Round Vent Caps
Page 357

Designer Range

ADDINGTON II TYPE 10 TOWEL RAIL - GLOSS WHITE

Bar Dimensions (mm)

Horizontal Bars 70 x 11mm

Pictured 62.0260 Gloss White

790mm High

1750mm High

1110mm High

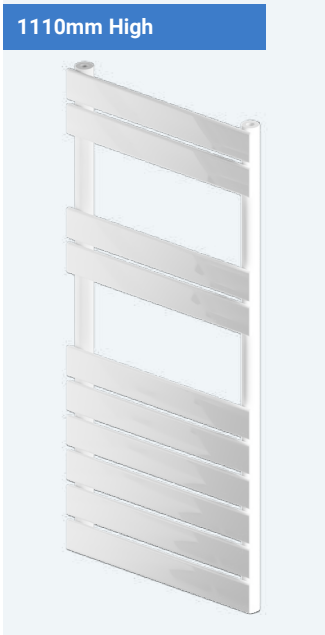

Brighten your bathroom with Addington II Type 10 Towel Rail in gloss white finish. Featuring slim flat panels and a crisp, clean finish, this designer towel rail adds a fresh, modern touch while keeping towels warm and ready.

FEATURES

- Tested to BS EN 442 standards
- Single profile construction
- Maximum corrosion resistance
- Can be single, dual fuel or all electric
- 5 Year Manufacturer's Warranty*

* With conditions

Technical Tables & Drawings
Page 402-403

TECHNICAL INFORMATION

All measurements in Height by Width. Radiators that are electric only are restricted to the heat output of the elements. Element size can be increased to full capacity of rail if using element type B, D, or E. For element types see pages 324-337. For matching valves see pages 338-353. For indirect heating systems only. Tappings are 50mm less than the width of the rail and approx. 40mm off the wall. Price includes radiator and wall fixing sets, valves extra. Cannot be used with dual fuel valves.

Warranty 5 Year | Heating | All Electric | Dual-Fuel

Addington II Type 10 Towel Rails - Gloss White

Size H x W	Delta △T30 Watts	Delta △T30 BTU	Delta △T50 Watts	Delta △T50 BTU	Element Output	Element Type	Code	£ Ex VAT	£ Inc VAT
790 x 400mm	169	577	318	1085	150W	A, A+, B, E	62.0252	157.00	**188.40**
790 x 500mm	200	682	375	1279	300W	A, A+, B, E	62.0253	181.00	**217.20**
790 x 600mm	229	781	430	1467	300W	A, A+, B, E	62.0254	205.00	**246.00**
1110 x 400mm	222	758	418	1426	300W	A, A+, B, E	62.0255	233.00	**279.60**
1110 x 500mm	262	894	494	1685	300W	A, A+, B, E	62.0256	243.00	**291.60**
1110 x 600mm	300	1023	567	1934	450W	A, A+, B, E	62.0257	252.00	**302.40**
1750 x 400mm	324	1105	617	2104	450W	A, A+, B, E	62.0258	333.00	**399.60**
1750 x 500mm	383	1307	729	2486	600W	A, A+, B, E	62.0259	347.00	**416.40**
1750 x 600mm	439	1497	836	2851	600W	A, A+, B, E	62.0260	361.00	**433.20**

Radiator Valves
Page 338-353

Round Vent Caps
Page 357

Designer Range

ADDINGTON II TYPE 10 TOWEL RAIL - MATT ANTHRACITE & MATT BLACK

Bar Dimensions (mm)

Horizontal Bars 70 x 11mm

Pictured 62.0274 Matt Black

Pictured 62.0262 Matt Anthracite

Bring depth and sophistication to your space with Addington II Type 10 Towel Rail in Matt Anthracite or Matt Black. The bold, flat panel design and stylish dark finish make it a standout feature, delivering both warmth and contemporary style.

FEATURES

- Tested to BS EN 442 standards
- Single profile construction
- Maximum corrosion resistance
- Can be single, dual fuel or all electric
- 5 Year Manufacturer's Warranty*

* With conditions

Technical Tables & Drawings
Page 402-403

TECHNICAL INFORMATION

All measurements in Height by Width. Radiators that are electric only are restricted to the heat output of the elements. Element size can be increased to full capacity of rail if using element type B, D, or E. For element types see pages 324-337. For matching valves see pages 338-353. For indirect heating systems only. Tappings are 50mm less than the width of the rail and approx. 40mm off the wall. Price includes radiator and wall fixing sets, valves extra. Cannot be used with dual fuel valves.

Warranty 5 Year | Heating | All Electric | Dual-Fuel

Addington II Type 10 Towel Rails - Matt Anthracite

Size H x W	Delta △T30 Watts	Delta △T30 BTU	Delta △T50 Watts	Delta △T50 BTU	Element Output	Element Type	Code	£ Ex VAT	£ Inc VAT
790 x 400mm	169	577	318	1085	150W	A, A+, B, E	62.0261	157.00	**188.40**
790 x 500mm	200	682	375	1279	300W	A, A+, B, E	62.0262	181.00	**217.20**
790 x 600mm	229	781	430	1467	300W	A, A+, B, E	62.0263	205.00	**246.00**
1110 x 400mm	222	758	418	1426	300W	A, A+, B, E	62.0264	233.00	**279.60**
1110 x 500mm	262	894	494	1685	300W	A, A+, B, E	62.0265	243.00	**291.60**
1110 x 600mm	300	1023	567	1934	450W	A, A+, B, E	62.0266	252.00	**302.40**
1750 x 400mm	324	1105	617	2104	450W	A, A+, B, E	62.0267	333.00	**399.60**
1750 x 500mm	383	1307	729	2486	600W	A, A+, B, E	62.0268	347.00	**416.40**
1750 x 600mm	439	1497	836	2851	600W	A, A+, B, E	62.0269	361.00	**433.20**

Addington II Type 10 Towel Rails - Matt Black

Size H x W	Delta △T30 Watts	Delta △T30 BTU	Delta △T50 Watts	Delta △T50 BTU	Element Output	Element Type	Code	£ Ex VAT	£ Inc VAT
790 x 400mm	169	577	318	1085	150W	A, A+, B, E	62.0270	157.00	**188.40**
790 x 500mm	200	682	375	1279	300W	A, A+, B, E	62.0271	181.00	**217.20**
790 x 600mm	229	781	430	1467	300W	A, A+, B, E	62.0272	205.00	**246.00**
1110 x 400mm	222	758	418	1426	300W	A, A+, B, E	62.0273	233.00	**279.60**
1110 x 500mm	262	894	494	1685	300W	A, A+, B, E	62.0274	243.00	**291.60**
1110 x 600mm	300	1023	567	1934	450W	A, A+, B, E	62.0275	252.00	**302.40**
1750 x 400mm	324	1105	617	2104	450W	A, A+, B, E	62.0276	333.00	**399.60**
1750 x 500mm	383	1307	729	2486	600W	A, A+, B, E	62.0277	347.00	**416.40**
1750 x 600mm	439	1497	836	2851	600W	A, A+, B, E	62.0278	361.00	**433.20**

Radiator Valves
Page 338-353

Round Vent Caps
Page 357

Designer Range

ADDINGTON II TYPE 10 TOWEL RAIL - CHROME

Pictured 62.0284 Chrome

Bar Dimensions (mm)

Horizontal Bars 70 x 11mm

790mm High

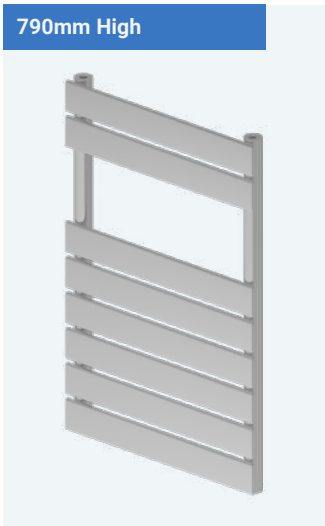

1110mm High

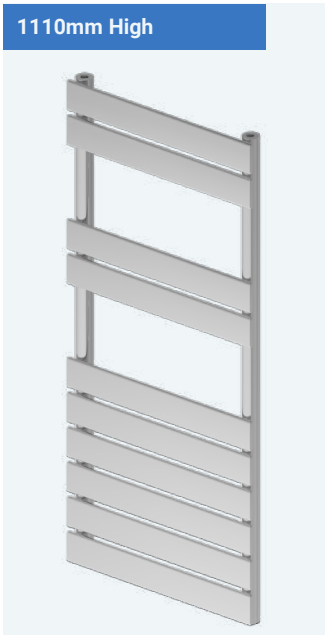

1750mm High

Add a touch of timeless shine with the Addington II Type 10 Towel Rail in Chrome. The reflective finish and flat panel design blend elegance and practicality, keeping your towels warm while enhancing your bathroom's modern aesthetic.

FEATURES

- Tested to BS EN 442 standards
- Single profile construction
- Maximum corrosion resistance
- Can be single, dual fuel or all electric
- 5 Year Manufacturer's Warranty*

* With conditions

Technical Tables & Drawings
Page 402-403

TECHNICAL INFORMATION

All measurements in Height by Width. Radiators that are electric only are restricted to the heat output of the elements. Element size can be increased to full capacity of rail if using element type B or E. For element types see pages 324-337. For matching valves see pages 338-353. For indirect heating systems only. Tappings are 50mm less than the width of the rail and approx. 40mm off the wall. Price includes radiator and wall fixing sets, valves extra. Cannot be used with dual fuel valves.

Warranty 5 Year | Heating | All Electric | Dual-Fuel

Addington II Type 10 Towel Rails - Chrome

Size H x W	Delta △T30 Watts	Delta △T30 BTU	Delta △T50 Watts	Delta △T50 BTU	Element Output	Element Type	Code	£ Ex VAT	£ Inc VAT
790 x 400mm	97	331	187	638	150W	A, A+, B, E	62.0279	220.00	**264.00**
790 x 500mm	115	393	220	751	150W	A, A+, B, E	62.0280	253.00	**303.60**
790 x 600mm	131	447	252	860	150W	A, A+, B, E	62.0281	286.00	**343.20**
1110 x 400mm	129	440	249	850	150W	A, A+, B, E	62.0282	326.00	**391.20**
1110 x 500mm	152	519	293	1000	150W	A, A+, B, E	62.0283	340.00	**408.00**
1110 x 600mm	173	590	335	1143	300W	A, A+, B, E	62.0284	353.00	**423.60**
1750 x 400mm	191	652	370	1262	300W	A, A+, B, E	62.0285	466.00	**559.20**
1750 x 500mm	224	764	436	1487	300W	A, A+, B, E	62.0286	486.00	**583.20**
1750 x 600mm	256	873	498	1699	300W	A, A+, B, E	62.0287	506.00	**607.20**

Radiator Valves
Page 338-353

Round Vent Caps
Page 357

Designer Range

ADDINGTON II TYPE 20 TOWEL RAIL

Pictured 62.0288 Gloss White

Pictured 62.0293 Matt Black

The Addington II Type 20 Towel Rail combines high heat output with sleek modern design, thanks to its double horizontal panel construction. Available in a choice of Gloss White, Matt Anthracite, and Matt Black finishes, it offers versatile style to suit any bathroom interior while keeping your space warm and your towels toasty.

FEATURES

- Tested to BS EN 442 standards
- Double profile construction
- Maximum corrosion resistance
- Can be single, dual fuel or all electric
- 5 Year Manufacturer's Warranty*

* With conditions

Technical Tables & Drawings
Page 402-403

TECHNICAL INFORMATION

All measurements in Height by Width. Radiators that are electric only are restricted to the heat output of the elements. Element size can be increased to full capacity of rail if using element type B or E. For element types see pages 324-337. For matching valves see pages 338-353. For indirect heating systems only. Tappings are 50mm less than the width of the rail and approx. 63mm off the wall. Price includes radiator and wall fixing sets, valves extra. Cannot be used with dual fuel valves.

Warranty 5 Year | Heating | All Electric | Dual-Fuel

Addington II Type 20 Towel Rails - Gloss White

Size H x W	Delta △T30 Watts	Delta △T30 BTU	Delta △T50 Watts	Delta △T50 BTU	Element Output	Element Type	Code	£ Ex VAT	£ Inc VAT
1110 x 500mm	373	1272	714	2435	600W	A, A+, B, E	62.0288	357.00	**428.40**
1750 x 500mm	539	1838	1031	3516	750W	A, A+, B, E	62.0289	509.00	**610.80**

Addington II Type 20 Towel Rails - Matt Anthracite

Size H x W	Delta △T30 Watts	Delta △T30 BTU	Delta △T50 Watts	Delta △T50 BTU	Element Output	Element Type	Code	£ Ex VAT	£ Inc VAT
1110 x 500mm	373	1272	714	2435	600W	A, A+, B, E	62.0290	357.00	**428.40**
1750 x 500mm	539	1838	1031	3516	750W	A, A+, B, E	62.0291	509.00	**610.80**

Addington II Type 20 Towel Rails - Matt Black

Size H x W	Delta △T30 Watts	Delta △T30 BTU	Delta △T50 Watts	Delta △T50 BTU	Element Output	Element Type	Code	£ Ex VAT	£ Inc VAT
1110 x 500mm	373	1272	714	2435	600W	A, A+, B, E	62.0292	357.00	**428.40**
1750 x 500mm	539	1838	1031	3516	750W	A, A+, B, E	62.0293	509.00	**610.80**

Round Vent Caps
Page 357

Compact Panel Range

Introducing our latest range of Compact Panel radiators. Offering a selection of more than 200 sizes and 3 colours, you can be confident in discovering the ideal solution for efficient home heating that perfectly matches your space.

Contents

Longbridge Type 22 Compact Panel Radiator **NEW PRODUCT**	178-179
Longden Type 11 Compact Panel Radiator	180
Longden Type 21 Compact Panel Radiator	181
Longden Type 22 Compact Panel Radiator	182-183
Longden Type 11, 21 & 22 Compact Panel Radiator, Matt Anthracite	184
Longden Type 11, 21 & 22 Compact Panel Radiator, Matt Black	185
Compact Panel Radiators Technical Information	186-187
Type 22 Keynsham Radiator with Flat Cover, Available in 3 colours	188
Type 22 Keynsham Radiator with Lined Cover, Available in 3 colours	189
Flat Cover Plates, Available in 3 colours	190
Flat Cover Plates with Lines, Available in 3 colours	191
Compact Panel Radiator Towel Hangers, Available in 3 colours	192
Pipe Shrouds & Collar Kits, Available in 12 colours - **NEW COLOUR**	192

• NEW PRODUCT HERE •

Compact Panel Range

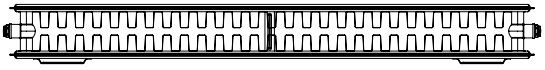

LONGBRIDGE COMPACT PANEL TYPE 22 - GLOSS WHITE

Height H	Width W	Heat Output ΔT30°C		Heat Output ΔT50°C		Water Content / Litres	Weight / Kg	Code	£ Ex VAT	£ Inc VAT
mm	mm	Watts	BTU	Watts	BTU					
600	400	312	1064	604	2060	2.43	12.12	41.7001	301.36	**361.63**
	500	390	1330	755	2575	3.03	14.56	41.7002	345.73	**414.87**
	600	468	1596	906	3090	3.64	17.10	41.7003	389.95	**467.94**
	700	546	1862	1057	3605	4.25	19.54	41.7004	437.16	**524.59**
	800	624	2128	1208	4120	4.85	22.13	41.7005	480.10	**576.12**
	900	702	2394	1360	4638	5.46	24.57	41.7006	524.05	**628.86**
	1000	781	2664	1511	5153	6.07	27.10	41.7007	570.97	**685.16**
	1100	859	2930	1662	5668	6.67	29.59	41.7008	614.06	**736.87**
	1200	937	3196	1813	6183	7.28	32.07	41.7009	661.55	**793.86**
	1300	1015	3462	1964	6698	7.89	34.51	41.7010	705.77	**846.92**
	1400	1093	3728	2115	7213	8.49	37.04	41.7011	750.14	**900.16**
	1500	1171	3994	2266	7728	9.1	39.59	41.7012	793.65	**952.38**
	1600	1249	4260	2417	8242	9.71	42.08	41.7013	848.81	**1018.57**
	1800	1405	4792	2719	9272	10.92	47.35	41.7014	941.51	**1129.81**
	2000	1561	5324	3021	10302	12.14	52.32	41.7015	1033.37	**1240.04**

Type 22 - Height 600mm

Pictured 41.7013 Gloss White

FEATURES - TYPE 22 RADIATORS
- Tested to BS EN 442 standards
- Manufactured in automatic production lines
- Hot water central heating systems only
- Max operating pressure 4 bars
- Complete with fitted top grill & side panels
- Radiators have 4 x 1/2" connections
- Powder coated in RAL 9016 Gloss White
- Installation kit included in packaging
- 10 Year Manufacturer's Warranty*

* With conditions

Manufacturer's Warranty 10 Years

Central Heating System

UK CA CE

Flat Panel Covers
Page 190

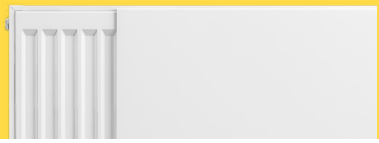

Flat Panel Covers With Lines
Page 191

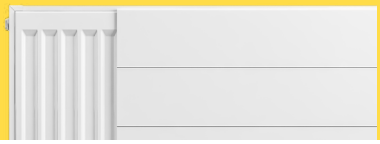

TECHNICAL INFORMATION (TYPE 22)

All measurements in Height by Width. Heat outputs stated are based on ▲T30˚C & ▲T50˚C. Radiators are only suitable for two-pipe installations. Pipework installation is recommended after receipt of radiator. High quality mild steel material, 1.11mm thickness. Air vent and blanking plug included in installation kit. Tappings are the width of the radiator.

Valves
Page 338-353

Compact Panel Range

LONGBRIDGE COMPACT PANEL TYPE 22 - GLOSS WHITE

Our Longbridge Compact Panel Radiators are packed in heavy duty, protective packaging.
Full size protective cardboard box, side cartons, bubble wrap,
plastic corner protection and tightening straps

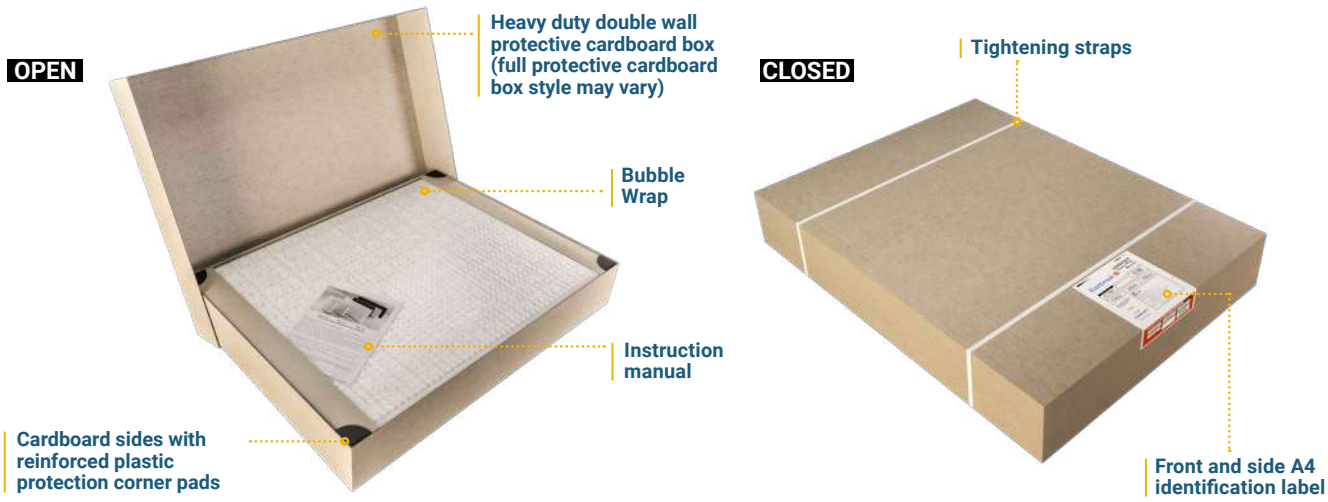

10 YEAR MANUFACTURER'S WARRANTY

Our compact panel radiators are individually tested and supplied complete with a 10 Year Manufacturer's Warranty against any manufacturing or material fault. All our compact panel radiators have a working pressure of 4 Bars.

COMPLETE WITH FIXING KITS

Each compact panel radiator is supplied with complete concealed wall brackets including air vent and blanking plug.

QUALITY

All our compact panel radiators are manufactured under ISO 9001:2015 and comply to UKCA & CE standards.

AFTERSALES

In the event of any questions or concerns, we have a dedicated Technical and Aftersales team that will be able to assist with regarding the installation of the radiators.

Pictured 41.7009 Gloss White

Compact Panel Range

LONGDEN COMPACT PANEL TYPE 11 - GLOSS WHITE

Height H	Width W	Heat Output ΔT30°C		Heat Output ΔT50°C		Water Content / Litres	Weight / Kg	Code	£ Ex VAT	£ Inc VAT
mm	mm	Watts	BTU	Watts	BTU					
300	400	104	355	201	688	0.68	3.91	25.0010	73.65	**88.38**
	500	130	444	252	860	0.85	4.64	25.0011	92.01	**110.41**
	600	156	532	302	1032	1.02	5.38	25.0012	110.43	**132.51**
	800	208	710	403	1375	1.36	6.93	25.0013	128.84	**154.60**
	1000	260	887	504	1719	1.70	8.41	25.0014	184.07	**220.88**
	1200	312	1065	604	2063	2.04	9.89	25.0015	220.88	**265.05**
	1400	364	1242	705	2407	2.38	11.44	25.0016	257.69	**309.22**
	1600	416	1420	806	2751	2.72	12.92	25.0017	294.49	**353.38**
	2000	520	1774	1007	3439	3.40	16.05	25.0018	368.12	**441.74**

Type 11 - Height 300mm

400	400	134	458	262	895	0.84	5.03	25.0019	94.99	**113.98**
	500	168	572	328	1118	1.05	6.02	25.0020	118.74	**142.48**
	600	201	686	393	1342	1.26	7.00	25.0021	142.47	**170.96**
	700	235	801	459	1566	1.50	7.98	25.0022	166.23	**199.47**
	800	268	915	524	1789	1.68	9.03	25.0023	189.95	**227.94**
	900	302	1030	590	2013	1.90	10.02	25.0024	213.71	**256.45**
	1000	335	1144	655	2237	2.10	11.00	25.0025	237.43	**284.91**
	1100	369	1258	721	2460	2.30	11.97	25.0026	261.17	**313.40**
	1200	402	1373	786	2684	2.52	12.95	25.0027	284.93	**341.91**
	1400	469	1602	917	3131	2.94	15.00	25.0028	332.42	**398.90**
	1600	536	1831	1048	3579	3.36	16.96	25.0029	379.90	**455.88**
	1800	603	2059	1179	4026	3.80	18.43	25.0030	427.39	**512.86**
	2000	670	2288	1310	4473	4.20	21.11	25.0031	474.89	**569.86**

Type 11 - Height 400mm

500	400	164	558	319	1089	1.04	6.18	25.0032	114.85	**137.82**
	500	204	698	399	1361	1.30	7.41	25.0033	143.58	**172.29**
	600	245	838	478	1634	1.56	8.64	25.0034	172.25	**206.70**
	700	286	977	558	1906	1.80	9.87	25.0035	201.03	**241.23**
	800	327	1117	638	2178	2.08	11.17	25.0036	229.72	**275.66**
	900	368	1256	718	2450	2.30	12.40	25.0037	258.42	**310.10**
	1000	409	1396	797	2723	2.60	13.64	25.0038	287.15	**344.58**
	1100	450	1536	877	2995	2.90	14.87	25.0039	315.85	**379.02**
	1200	491	1675	957	3267	3.12	16.10	25.0040	344.57	**413.48**
	1300	532	1815	1037	3539	3.40	17.40	25.0041	373.29	**447.94**
	1400	572	1954	1116	3812	3.64	18.63	25.0042	402.00	**482.40**
	1500	613	2094	1196	4084	3.90	19.87	25.0043	430.72	**516.86**
	1600	654	2233	1276	4356	4.16	21.10	25.0044	459.43	**551.31**
	1800	736	2513	1435	4901	4.70	23.83	25.0045	516.87	**620.24**
	2000	818	2792	1595	5445	5.20	26.29	25.0046	574.26	**689.11**

Type 11 - Height 500mm

600	400	193	660	375	1280	1.24	7.34	25.0047	133.71	**160.45**
	500	242	825	469	1600	1.55	8.82	25.0048	167.13	**200.55**
	600	290	989	562	1920	1.86	10.30	25.0049	200.56	**240.67**
	700	338	1154	656	2240	2.20	11.79	25.0050	233.99	**280.78**
	800	386	1319	750	2560	2.48	13.34	25.0051	267.40	**320.88**
	900	435	1484	843	2880	2.80	14.82	25.0052	300.85	**361.02**
	1000	483	1649	937	3200	3.10	16.30	25.0053	334.26	**401.11**
	1100	531	1814	1031	3520	3.40	17.78	25.0054	367.68	**441.21**
	1200	580	1979	1125	3840	3.72	19.27	25.0055	401.11	**481.33**
	1300	628	2144	1218	4159	4.00	20.82	25.0056	434.52	**521.42**
	1400	676	2309	1312	4479	4.34	22.30	25.0057	467.96	**561.55**
	1500	725	2474	1406	4799	4.70	23.78	25.0058	501.39	**601.66**
	1600	773	2639	1499	5119	4.96	25.26	25.0059	534.79	**641.74**
	1800	869	2968	1687	5759	5.60	28.55	25.0060	601.68	**722.01**
	2000	966	3298	1874	6399	6.20	31.51	25.0061	668.52	**802.22**

Type 11 - Height 600mm

Manufacturer's Warranty 10 Years

Central Heating System

UK CA CE

Compact Panel Range

LONGDEN COMPACT PANEL TYPE 21 - GLOSS WHITE

Height H	Width W	Heat Output ΔT30°C		Heat Output ΔT50°C		Water Content / Litres	Weight / Kg	Code	£ Ex VAT	£ Inc VAT
mm	mm	Watts	BTU	Watts	BTU					
400	400	189	646	372	1270	1.68	7.84	25.0078	145.17	**174.20**
	500	237	808	465	1587	2.10	9.51	25.0079	181.49	**217.78**
	600	284	969	558	1905	2.52	11.19	25.0080	217.79	**261.34**
	700	331	1131	651	2222	2.90	12.86	25.0081	254.07	**304.88**
	800	379	1293	744	2540	3.36	14.61	25.0082	290.39	**348.46**
	900	426	1454	837	2857	3.80	16.28	25.0083	326.69	**392.02**
	1000	473	1616	930	3175	4.20	17.95	25.0084	362.97	**435.56**
	1100	521	1777	1023	3492	4.60	19.61	25.0085	399.29	**479.14**
	1200	568	1939	1116	3810	5.04	21.27	25.0086	435.57	**522.68**
	1400	663	2262	1302	4445	5.88	24.72	25.0087	508.17	**609.80**
	1600	757	2585	1488	5080	6.72	28.07	25.0088	580.76	**696.91**
	1800	852	2908	1674	5715	7.60	30.19	25.0089	653.35	**784.02**
	2000	946	3231	1860	6350	8.40	34.99	25.0090	725.95	**871.14**

Type 21 - Height 400mm

500	400	226	770	444	1516	2.08	9.68	25.0091	173.43	**208.11**
	500	282	963	555	1895	2.60	11.79	25.0092	216.84	**260.20**
	600	338	1155	666	2274	3.12	13.89	25.0093	260.19	**312.22**
	700	395	1348	777	2653	3.60	15.99	25.0094	303.56	**364.27**
	800	451	1540	888	3032	4.16	18.16	25.0095	346.93	**416.31**
	900	508	1733	999	3411	4.70	20.27	25.0096	390.30	**468.36**
	1000	564	1925	1110	1417	5.20	22.37	25.0097	433.66	**520.39**
	1100	620	2118	1221	4168	5.70	24.47	25.0098	477.00	**572.40**
	1200	677	2310	1332	4547	6.24	26.58	25.0099	521.49	**625.78**
	1400	790	2696	1554	5305	7.28	30.85	25.0100	607.10	**728.52**
	1600	902	3081	1776	6063	8.32	35.06	25.0101	693.84	**832.60**
	1800	1015	3466	1998	6821	9.40	39.53	25.0102	780.58	**936.69**
	2000	1128	3851	2220	7579	10.40	43.74	25.0103	867.30	**1040.76**

Type 21 - Height 500mm

600	400	262	895	516	1761	2.48	11.55	25.0104	199.24	**239.08**
	500	328	1118	645	2201	3.10	14.08	25.0105	249.05	**298.86**
	600	393	1342	773	2641	3.72	16.61	25.0106	298.86	**358.63**
	700	459	1565	902	3081	4.30	19.14	25.0107	348.66	**418.39**
	800	524	1789	1031	3521	4.96	21.75	25.0108	398.45	**478.14**
	900	590	2013	1160	3961	5.60	24.28	25.0109	448.29	**537.94**
	1000	655	2236	1289	4401	6.20	26.81	25.0110	498.09	**597.70**
	1100	721	2460	1418	4841	6.80	29.34	25.0111	547.90	**657.48**
	1200	786	2684	1547	5282	7.44	31.87	25.0112	597.70	**717.24**
	1300	852	2907	1676	5722	8.10	34.48	25.0113	647.51	**777.01**
	1400	917	3131	1805	6162	8.68	37.01	25.0114	697.33	**836.79**
	1500	983	3355	1934	6602	9.30	39.54	25.0115	747.11	**896.53**
	1600	1048	3578	2063	7042	9.92	42.07	25.0116	796.93	**956.31**
	1800	1179	4026	2320	7922	11.20	47.45	25.0117	896.54	**1075.84**
	2000	1310	4473	2578	8803	12.40	52.52	25.0118	996.17	**1195.40**

Type 21 - Height 600mm

FEATURES - TYPE 11 & 21 RADIATORS

- Tested to BS EN 442 standards
- Manufactured in automatic production lines
- Hot water central heating systems only
- Max operating pressure 4 bars
- Complete with fitted top grill & side panels
- Radiators have 4 x 1/2" connections
- Powder coated in RAL 9016 Gloss White
- Installation kit included in packaging
- 10 Year Manufacturer's Warranty*

* With conditions

Manufacturer's Warranty **10** Years

Central Heating System

UK CA CE

Flat Panel Covers

Page 190

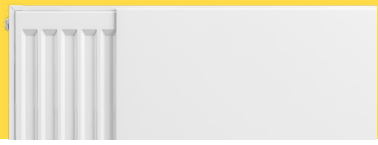

Flat Panel Covers With Lines

Page 191

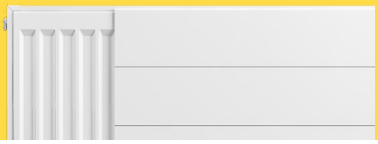

TECHNICAL INFORMATION (TYPE 11 & 21)

All measurements in Height by Width. Heat outputs stated are based on ▲T30˚C & ▲T50˚C. Radiators are only suitable for two-pipe installations. Pipework installation is recommended after receipt of radiator. High quality mild steel material, 1.11mm thickness. Air vent and blanking plug included in installation kit. Tappings are the width of the radiator.

Valves

Page 338-353

Compact Panel Range

LONGDEN COMPACT PANEL TYPE 22 - GLOSS WHITE

Height H	Width W	Heat Output ΔT30°C		Heat Output ΔT50°C		Water Content / Litres	Weight / Kg	Code	£ Ex VAT	£ Inc VAT
mm	mm	Watts	BTU	Watts	BTU					
300	400	189	646	370	1264	1.36	6.68	25.0135	147.69	**177.22**
	600	284	970	555	1896	2.04	9.41	25.0136	221.55	**265.86**
	800	379	1293	740	2528	2.72	12.21	25.0137	295.39	**354.46**
	1000	473	1616	925	3160	3.40	14.93	25.0138	369.24	**443.08**
	1200	568	1939	1111	3792	4.08	17.66	25.0139	443.08	**531.69**
	1400	663	2263	1296	4423	4.76	20.46	25.0140	516.92	**620.30**
	1600	757	2586	1481	5055	5.44	23.19	25.0141	590.77	**708.92**
	2000	947	3232	1851	6319	6.80	28.82	25.0142	738.50	**886.20**

Type 22 - Height 300mm

400	400	238	814	472	1611	1.68	8.80	25.0143	187.60	**225.12**
	500	298	1017	590	2014	2.10	10.65	25.0144	234.49	**281.38**
	600	358	1221	708	2417	2.52	12.49	25.0145	281.41	**337.69**
	700	417	1424	826	2820	2.90	14.34	25.0146	328.30	**393.96**
	800	477	1628	944	3222	3.36	16.25	25.0147	375.20	**450.24**
	900	536	1831	1062	3625	3.80	18.10	25.0148	422.11	**506.53**
	1000	596	2035	1180	4028	4.20	19.94	25.0149	468.97	**562.76**
	1100	656	2238	1298	4431	4.60	21.76	25.0150	515.91	**619.09**
	1200	715	2442	1416	4834	5.04	23.60	25.0151	562.79	**675.34**
	1400	834	2849	1652	5639	5.88	27.39	25.0152	656.57	**787.88**
	1600	954	3256	1888	6445	6.72	31.08	25.0153	750.37	**900.44**
	1800	1073	3663	2124	7250	7.60	33.53	25.0154	844.21	**1013.05**
	2000	1192	4070	2360	8056	8.40	38.67	25.0155	938.01	**1125.61**

Type 22 - Height 400mm

500	400	287	978	567	1935	2.08	10.93	25.0156	224.40	**269.28**
	500	358	1223	708	2418	2.60	13.27	25.0157	280.52	**336.62**
	600	430	1468	850	2902	3.12	15.60	25.0158	336.61	**403.93**
	700	501	1712	992	3386	3.60	17.93	25.0159	392.72	**471.26**
	800	573	1957	1133	3869	4.16	20.34	25.0160	448.84	**538.60**
	900	645	2201	1275	4353	4.70	22.67	25.0161	504.91	**605.89**
	1000	716	2446	1417	4837	5.20	25.01	25.0162	561.05	**673.26**
	1100	788	2691	1558	5320	5.70	27.34	25.0163	617.14	**740.56**
	1200	860	2935	1700	5804	6.24	29.67	25.0164	673.24	**807.88**
	1300	931	3180	1842	6288	6.80	32.08	25.0165	729.33	**875.19**
	1400	1003	3424	1983	6771	7.28	34.41	25.0166	785.43	**942.51**
	1500	1075	3669	2125	7255	7.80	36.75	25.0167	841.55	**1009.86**
	1600	1146	3914	2267	7739	8.32	39.08	25.0168	897.62	**1077.14**
	1800	1290	4403	2550	8706	9.40	44.02	25.0169	1009.83	**1211.79**
	2000	1433	4892	2833	9674	10.40	48.69	25.0170	1122.05	**1346.46**

Type 22 - Height 500mm

FEATURES - TYPE 22 RADIATORS
- Tested to BS EN 442 standards
- Manufactured in automatic production lines
- Hot water central heating systems only
- Max operating pressure 4 bars
- Complete with fitted top grill & side panels
- Radiators have 4 x 1/2" connections
- Powder coated in RAL 9016 Gloss White
- Installation kit included in packaging
- 10 Year Manufacturer's Warranty*

* With conditions

Manufacturer's Warranty 10 Years

Central Heating System

UK CA CE

Flat Panel Covers
Page 190

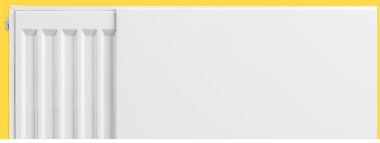

Flat Panel Covers With Lines
Page 191

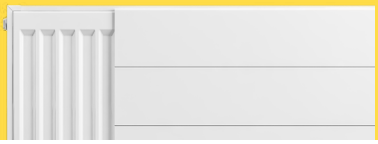

TECHNICAL INFORMATION (TYPE 22)

All measurements in Height by Width. Heat outputs stated are based on ▲T30˚C & ▲T50˚C. Radiators are only suitable for two-pipe installations. Pipework installation is recommended after receipt of radiator. High quality mild steel material, 1.11mm thickness. Air vent and blanking plug included in installation kit. Tappings are the width of the radiator.

Valves
Page 338-353

Compact Panel Range

LONGDEN COMPACT PANEL TYPE 22 - GLOSS WHITE

Height H	Width W	Heat Output ΔT30°C		Heat Output ΔT50°C		Water Content / Litres	Weight / Kg	Code	£ Ex VAT	£ Inc VAT
mm	mm	Watts	BTU	Watts	BTU					
600	400	335	1143	660	2253	2.48	13.05	25.0171	258.28	**309.93**
	500	419	1429	825	2816	3.10	15.89	25.0172	322.83	**387.39**
	600	502	1715	990	3380	3.72	18.72	25.0173	387.44	**464.92**
	700	586	2001	1155	3943	4.30	21.55	25.0174	451.97	**542.36**
	800	670	2287	1320	4506	4.96	24.45	25.0175	516.56	**619.87**
	900	754	2573	1485	5070	5.60	27.28	25.0176	581.12	**697.34**
	1000	837	2859	1650	5633	6.20	30.10	25.0177	645.69	**774.82**
	1100	921	3145	1815	6196	6.80	32.93	25.0178	710.27	**852.32**
	1200	1005	3430	1980	6760	7.44	35.76	25.0179	774.84	**929.80**
	1300	1088	3716	2145	7323	8.10	38.66	25.0180	818.74	**982.48**
	1400	1172	4002	2310	7886	8.68	41.49	25.0181	903.97	**1084.76**
	1500	1256	4288	2475	8449	9.30	44.31	25.0182	968.54	**1162.24**
	1600	1340	4574	2640	9013	9.92	47.14	25.0183	1033.13	**1239.75**
	1800	1507	5146	2970	10139	11.20	53.12	25.0184	1162.27	**1394.72**
	2000	1675	5717	3300	11266	12.40	58.77	25.0185	1291.41	**1549.69**

Type 22 - Height 600mm

750	400	398	1360	786	2682	3.68	17.13	25.0202	288.15	**345.78**
	500	498	1700	982	3353	4.42	21.30	25.0203	360.22	**432.26**
	600	598	2040	1178	4024	5.15	25.84	25.0204	432.30	**518.76**
	800	797	2720	1571	5365	5.89	34.92	25.0205	576.29	**691.54**
	1000	996	3400	1964	6706	7.36	43.40	25.0206	720.44	**864.52**
	1200	1195	4080	2357	8047	8.83	51.98	25.0207	864.59	**1037.50**

Type 22 - Height 750mm

Pictured 25.0181 Gloss White

Type 11, 21 & 22 – Matt Anthracite

LONGDEN COMPACT PANEL TYPE 11 - MATT ANTHRACITE

Height H	Width W	Heat Output ΔT30°C		Heat Output ΔT50°C		Water Content / Litres	Weight / Kg	Code	£ Ex VAT	£ Inc VAT
mm	mm	Watts	BTU	Watts	BTU					
600	400	193	660	375	1280	1.24	7.34	25.0062	147.08	**176.49**
	600	290	989	562	1920	1.86	10.30	25.0063	220.62	**264.74**
	800	386	1319	750	2560	2.48	13.34	25.0064	294.14	**352.96**
	1000	483	1649	937	3200	3.10	16.30	25.0065	367.69	**441.22**
	1200	580	1979	1125	3840	3.72	19.27	25.0066	441.22	**529.46**
	1400	676	2309	1312	4479	4.34	22.30	25.0067	514.75	**617.70**
	1600	773	2639	1499	5119	4.96	25.26	25.0068	588.26	**705.91**
	1800	869	2968	1687	5759	5.60	28.55	25.0069	661.85	**794.22**

Type 11 - Height 600mm

LONGDEN COMPACT PANEL TYPE 21 - MATT ANTHRACITE

Height H	Width W	Heat Output ΔT30°C		Heat Output ΔT50°C		Water Content / Litres	Weight / Kg	Code	£ Ex VAT	£ Inc VAT
mm	mm	Watts	BTU	Watts	BTU					
600	400	262	895	516	1761	2.48	11.55	25.0119	219.16	**262.99**
	600	393	1342	773	2641	3.72	16.61	25.0120	328.74	**394.48**
	800	524	1789	1031	3521	4.96	21.75	25.0121	438.30	**525.96**
	1000	655	2236	1289	4401	6.20	26.81	25.0122	547.89	**657.46**
	1200	786	2684	1547	5282	7.44	31.87	25.0123	657.47	**788.96**
	1400	917	3131	1805	6162	8.68	37.01	25.0124	767.07	**920.48**
	1600	1048	3578	2063	7042	9.92	42.07	25.0125	876.61	**1051.93**
	1800	1179	4026	2320	7922	11.20	47.45	25.0126	986.19	**1183.42**

Type 21 - Height 600mm

LONGDEN COMPACT PANEL TYPE 22 - MATT ANTHRACITE

Height H	Width W	Heat Output ΔT30°C		Heat Output ΔT50°C		Water Content / Litres	Weight / Kg	Code	£ Ex VAT	£ Inc VAT
mm	mm	Watts	BTU	Watts	BTU					
600	400	335	1143	660	2253	2.48	13.07	25.0186	284.10	**340.92**
	600	502	1715	990	3380	3.72	18.72	25.0187	426.18	**511.41**
	800	670	2287	1320	4506	4.96	24.45	25.0188	568.22	**681.86**
	1000	837	2859	1650	5633	6.20	30.10	25.0189	710.26	**852.31**
	1200	1005	3430	1980	6760	7.44	35.76	25.0190	852.33	**1022.79**
	1400	1172	4002	2310	7886	8.68	41.49	25.0191	994.36	**1193.23**
	1600	1340	4574	2640	9013	9.92	47.14	25.0192	1136.44	**1363.72**
	1800	1507	5146	2970	10139	11.20	53.12	25.0193	1278.49	**1534.18**

Type 22 - Height 600mm

FEATURES - TYPE 11, 21 & 22 RADIATORS

- Tested to BS EN 442 standards
- Manufactured in automatic production lines
- Hot water central heating systems only
- Max operating pressure 4 bars
- Complete with fitted top grill & side panels
- Radiators have 4 x 1/2" connections
- Installation kit included in packaging
- Powder coated in RAL 9016 Gloss White or Matt Anthracite special colour mixture (closest colour RAL 7016 Matt)
- 10 Year Manufacturer's Warranty*

* With conditions

Manufacturer's Warranty 10 Years

Heating

UK CA CE

Flat Panel Covers
Page 190

Flat Panel Covers With Lines
Page 191

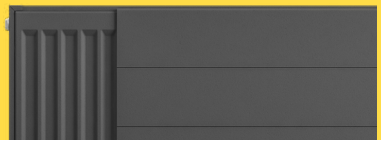

TECHNICAL INFORMATION (TYPE 11, 21 & 22)

All measurements in Height by Width. Heat outputs stated are based on ▲T30˚C & ▲T50˚C. Radiators are only suitable for two-pipe installations. Pipework installation is recommended after receipt of radiator. High quality mild steel material, 1.11mm thickness. Air vent and blanking plug included in installation kit. Tappings are the width of the radiator.

Valves
Page 338-353

Type 11, 21 & 22 – Matt Black

LONGDEN COMPACT PANEL TYPE 11 - MATT BLACK

Height H	Width W	Heat Output ΔT30°C		Heat Output ΔT50°C		Water Content / Litres	Weight / Kg	Code	£ Ex VAT	£ Inc VAT
mm	mm	Watts	BTU	Watts	BTU					
600	400	193	660	375	1280	1.24	7.34	25.0070	147.08	**176.49**
	600	290	989	562	1920	1.86	10.30	25.0071	220.62	**264.74**
	800	386	1319	750	2560	2.48	13.34	25.0072	294.14	**352.96**
	1000	483	1649	937	3200	3.10	16.30	25.0073	367.69	**441.22**
	1200	580	1979	1125	3840	3.72	19.27	25.0074	441.22	**529.46**
	1400	676	2309	1312	4479	4.34	22.30	25.0075	514.75	**617.70**
	1600	773	2639	1499	5119	4.96	25.26	25.0076	588.26	**705.91**
	1800	869	2968	1687	5759	5.60	28.55	25.0077	661.85	**794.22**

Type 11 - Height 600mm

LONGDEN COMPACT PANEL TYPE 21 - MATT BLACK

Height H	Width W	Heat Output ΔT30°C		Heat Output ΔT50°C		Water Content / Litres	Weight / Kg	Code	£ Ex VAT	£ Inc VAT
mm	mm	Watts	BTU	Watts	BTU					
600	400	262	895	516	1761	2.48	11.55	25.0127	219.16	**262.99**
	600	393	1342	773	2641	3.72	16.61	25.0128	328.74	**394.48**
	800	524	1789	1031	3521	4.96	21.75	25.0129	438.30	**525.96**
	1000	655	2236	1289	4401	6.20	26.81	25.0130	547.89	**657.46**
	1200	786	2684	1547	5282	7.44	31.87	25.0131	657.47	**788.96**
	1400	917	3131	1805	6162	8.68	37.01	25.0132	767.07	**920.48**
	1600	1048	3578	2063	7042	9.92	42.07	25.0133	876.61	**1051.93**
	1800	1179	4026	2320	7922	11.20	47.45	25.0134	986.19	**1183.42**

Type 21 - Height 600mm

LONGDEN COMPACT PANEL TYPE 22 - MATT BLACK

Height H	Width W	Heat Output ΔT30°C		Heat Output ΔT50°C		Water Content / Litres	Weight / Kg	Code	£ Ex VAT	£ Inc VAT
mm	mm	Watts	BTU	Watts	BTU					
600	400	335	1143	660	2253	2.48	13.07	25.0194	284.10	**340.92**
	600	502	1715	990	3380	3.72	18.72	25.0195	426.18	**511.41**
	800	670	2287	1320	4506	4.96	24.45	25.0196	568.22	**681.86**
	1000	837	2859	1650	5633	6.20	30.10	25.0197	710.26	**852.31**
	1200	1005	3430	1980	6760	7.44	35.76	25.0198	852.33	**1022.79**
	1400	1172	4002	2310	7886	8.68	41.49	25.0199	994.36	**1193.23**
	1600	1340	4574	2640	9013	9.92	47.14	25.0200	1136.44	**1363.72**
	1800	1507	5146	2970	10139	11.20	53.12	25.0201	1278.49	**1534.18**

Type 22 - Height 600mm

FEATURES - TYPE 11, 21 & 22 RADIATORS

- Tested to BS EN 442 standards
- Manufactured in automatic production lines
- Hot water central heating systems only
- Max operating pressure 4 bars
- Complete with fitted top grill & side panels
- Radiators have 4 x 1/2" connections
- Installation kit included in packaging
- Powder coated in RAL 9016 Gloss White or RAL 9005 Matt Black
- 10 Year Manufacturer's Warranty*

* With conditions

Manufacturer's Warranty 10 Years

Heating

UK CA CE

Flat Panel Covers
Page 190

Flat Panel Covers With Lines
Page 191

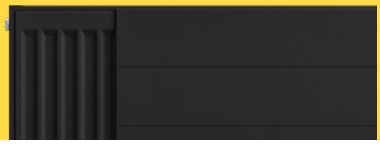

TECHNICAL INFORMATION (TYPE 11, 21 & 22)

All measurements in Height by Width. Heat outputs stated are based on ▲T30˚C & ▲T50˚C. Radiators are only suitable for two-pipe installations. Pipework installation is recommended after receipt of radiator. High quality mild steel material, 1.11mm thickness. Air vent and blanking plug included in installation kit. Tappings are the width of the radiator.

Valves
Page 338-353

Technical Information

Type 11 - Technical Drawing (Longden Radiators)

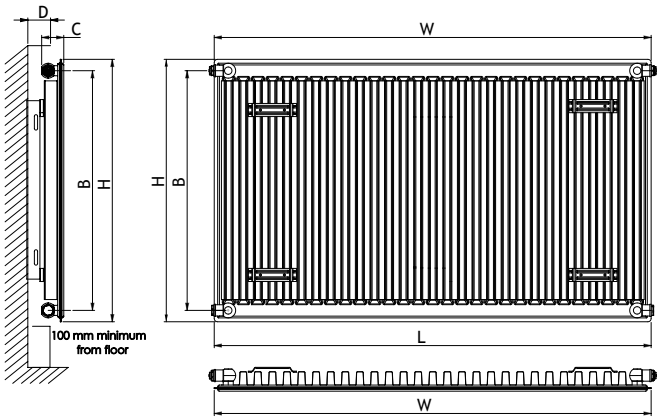

Height H (mm.)	Horizontal Tappings L (mm.)	Vertical Tappings B (mm.)	Radiator Depth C (mm.)	Tappings from Wall D (mm.)
300	W	245	50	38 / 50
400	W	345	50	38 / 50
500	W	445	50	38 / 50
600	W	545	50	38 / 50

* Radiators have 4 tappings in total.

Type 21 - Technical Drawing (Longden Radiators)

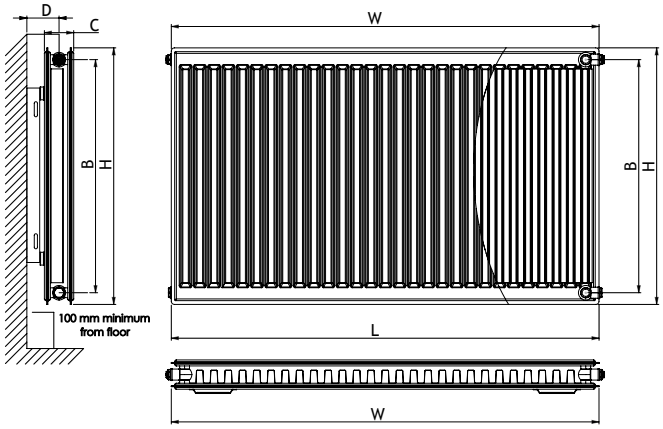

Height H (mm.)	Horizontal Tappings L (mm.)	Vertical Tappings B (mm.)	Radiator Depth C (mm.)	Tappings from Wall D (mm.)
400	W	345	70	56 / 68
500	W	445	70	56 / 68
600	W	545	70	56 / 68

* Radiators have 4 tappings in total.

Type 22 - Technical Drawing (Longden & Longbridge Radiators)

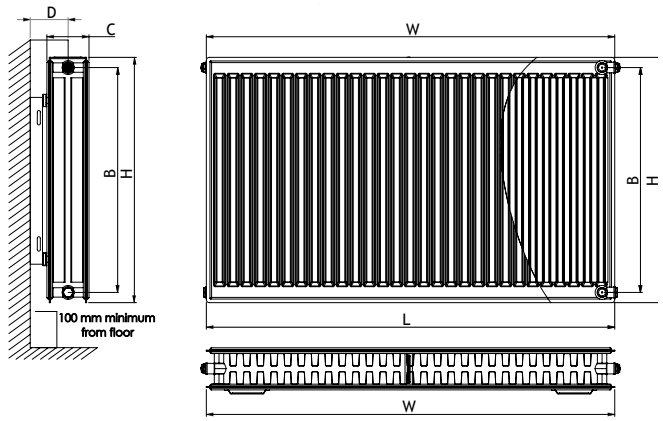

Height H (mm.)	Horizontal Tappings L (mm.)	Vertical Tappings B (mm.)	Radiator Depth C (mm.)	Tappings from Wall D (mm.)
300	W	245	102	72 / 84
400	W	345	102	72 / 84
500	W	445	102	72 / 84
600	W	545	102	72 / 84 - (80 / 91**)
750	W	695	102	72 / 84

* Radiators have 4 tappings in total.

** Only for Longbridge radiators

Wall Brackets (Longden & Longbridge Radiators)

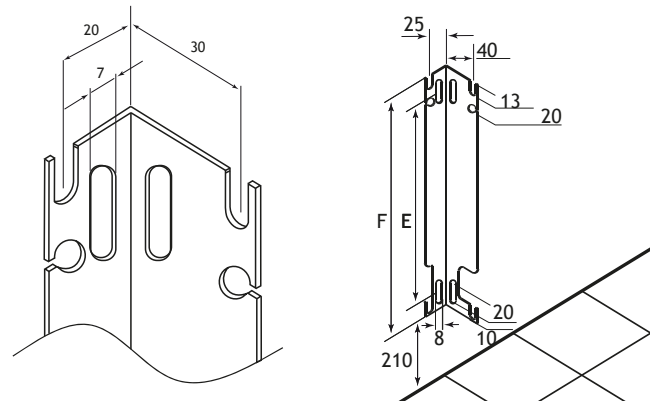

Radiator Height (mm.)	Bracket Length F (mm.)	Bracket Drilling Centre E (mm.)	Wall Bracket Code for 2 pcs	Wall Bracket Code for 3 pcs	Wall Bracket Quantity	
					2 pieces	3 pieces
300	108	-	25.9001	25.9005	Radiator Width 400 to 1600mm	Radiator Width 1800 to 2000mm
400	210	99	25.9002	25.9006		
500	309	198	25.9003	25.9007		
600	407	296	25.9004	25.9008		

*All wall brackets for all colour radiators come in galvanised colour (nickel).

All radiators come with wall fixings and wall brackets. Wall Bracket codes are stated above for spare part requests.

Bracket Positioning (Longden & Longbridge Radiators)

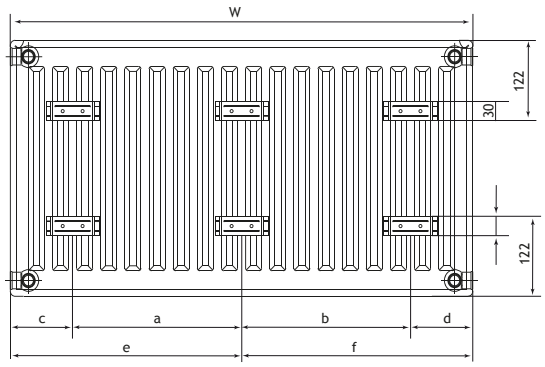

Radiator Width W (mm.)	Type 11 / Type 21 / Type 22							
	a (mm.)	b (mm.)	c (mm.)		d (mm.)		e (mm.)	f (mm.)
			Type 11	Type 21 / 22	Type 11	Type 21 / 22		
400 - 1600	W - 266.6	-	117	133.3	117	133.3	-	-
1800 - 2000	(W / 2) - 133.3	(W / 2) - 133.3	133.3		133.3		W / 2	W / 2

Technical Imagery

Connection Options for Compact Panel Radiators

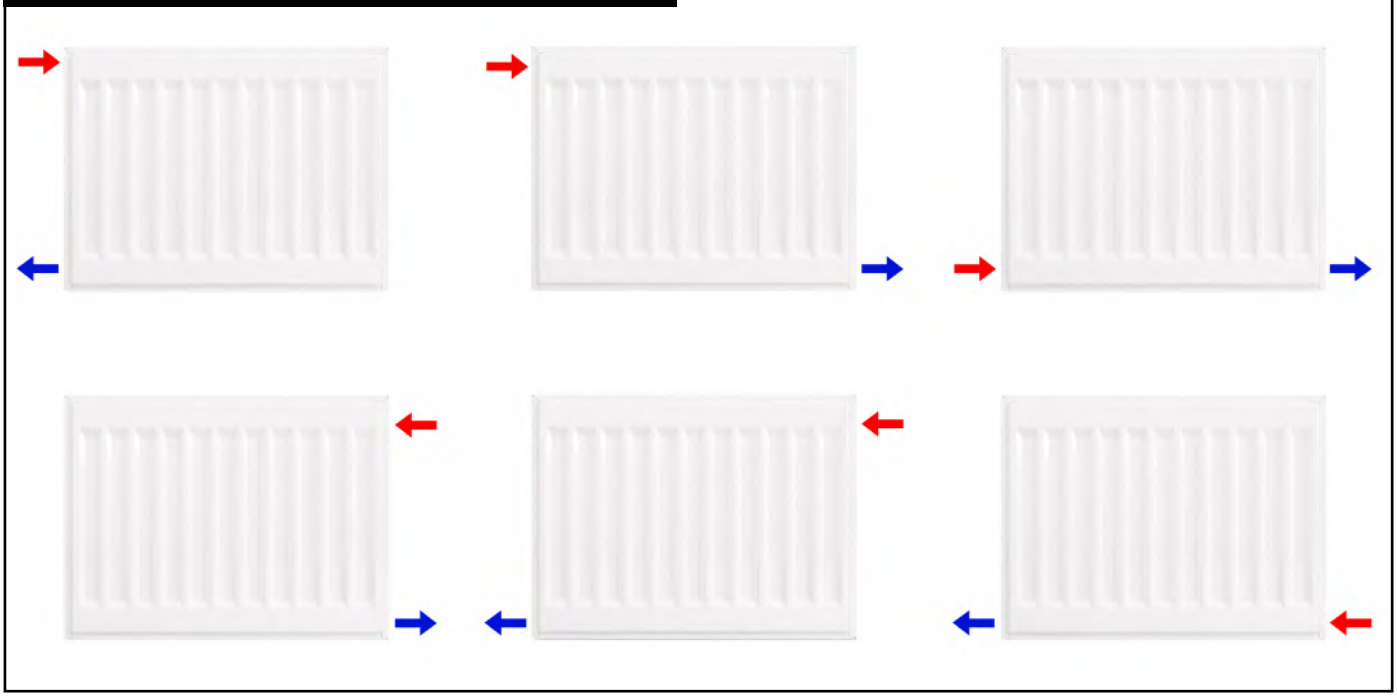

Pictured 25.7021 Gloss White

Pictured 25.0191 Matt Anthracite Panel Radiator with 25.5125 with Lined Cover

Type 22 Keynsham Radiator with Flat Cover

The radiator and cover plate will be bought under one code, but shipped in two separate packages. To install, the radiator's top grille and side panels first have to be removed, as these parts will not be needed. Then, simply slide the cover plate onto the radiator.

Pictured 25.7005 Gloss White

Introducing Type 22 Keynsham Radiator; a compact panel radiator paired with an ultra-modern design cover. The cover is incredibly easy to fit, enhancing the style of the radiator. Available in three stunning colours.

FEATURES - TYPE 22 KEYNSHAM RADIATORS

- Tested to BS EN 442 standards
- Manufactured in automatic production lines
- Hot water central heating systems only
- Max operating pressure 4 bars
- Radiators come complete with fitted top grill & side panels
- Remove radiator's top grill & side panels to fit cover
- Radiators have 4 x 1/2" connections
- Radiator fixing kit included in packaging
- Powder coated in RAL 9016 Gloss White, Matt Anthracite or RAL 9005 Matt Black
- 10 Year Manufacturer's Warranty*

* With conditions

TECHNICAL INFORMATION (TYPE 22 RADIATOR)

All measurements in Height by Width. Heat outputs stated are based on ▲T30˚C & ▲T50˚C. Radiators are only suitable for two-pipe installations. Pipework installation is recommended after receipt of radiator. High quality mild steel material, 1.11mm thickness. Air vent and blanking plug included in installation kit. Tappings are the width of the radiator.

Manufacturer's Warranty 10 Years

Heating

UK CA CE

KEYNSHAM PANEL RADIATOR - GLOSS WHITE

Height H	Width W	Heat Output ΔT30°C		Heat Output ΔT50°C		Water Content / Litres	Weight / Kg	Code	£ Ex VAT	£ Inc VAT
mm	mm	Watts	BTU	Watts	BTU					
600	400	335	1143	660	2253	2.48	15.57	25.7000	545.28	**654.33**
	500	419	1429	825	2816	3.10	18.89	25.7001	635.83	**762.99**
	600	502	1715	990	3380	3.72	22.12	25.7002	728.44	**874.12**
	800	670	2287	1320	4506	4.96	28.75	25.7003	870.56	**1044.67**
	1000	837	2859	1650	5633	6.20	35.40	25.7004	1046.69	**1256.02**
	1200	1005	3430	1980	6760	7.44	41.96	25.7005	1228.84	**1474.60**

Radiator & Cover - Gloss White

KEYNSHAM PANEL RADIATOR - MATT ANTHRACITE

Height H	Width W	Heat Output ΔT30°C		Heat Output ΔT50°C		Water Content / Litres	Weight / Kg	Code	£ Ex VAT	£ Inc VAT
mm	mm	Watts	BTU	Watts	BTU					
600	400	335	1143	660	2253	2.48	15.57	25.7006	599.10	**718.92**
	600	502	1715	990	3380	3.72	22.12	25.7007	800.18	**960.21**
	800	670	2287	1320	4506	4.96	28.75	25.7008	957.22	**1148.66**
	1000	837	2859	1650	5633	6.20	35.40	25.7009	1151.26	**1381.51**
	1200	1005	3430	1980	6760	7.44	41.96	25.7010	1351.33	**1621.59**

Radiator & Cover - Matt Anthracite

KEYNSHAM PANEL RADIATOR - MATT BLACK

Height H	Width W	Heat Output ΔT30°C		Heat Output ΔT50°C		Water Content / Litres	Weight / Kg	Code	£ Ex VAT	£ Inc VAT
mm	mm	Watts	BTU	Watts	BTU					
600	400	335	1143	660	2253	2.48	15.57	25.7011	599.10	**718.92**
	600	502	1715	990	3380	3.72	22.12	25.7012	800.18	**960.21**
	800	670	2287	1320	4506	4.96	28.75	25.7013	957.22	**1148.66**
	1000	837	2859	1650	5633	6.20	35.40	25.7014	1151.26	**1381.51**
	1200	1005	3430	1980	6760	7.44	41.96	25.7015	1351.33	**1621.59**

Radiator & Cover - Matt Black

Type 22 Keynsham Radiator with Lined Cover

The radiator and cover plate will be bought under one code, but shipped in two separate packages. To install, the radiator's top grille and side panels first have to be removed, as these parts will not be needed. Then, simply slide the cover plate onto the radiator.

Pictured 25.7020 Matt Anthracite

Introducing Type 22 Keynsham Radiator; a compact panel radiator paired with an ultra-modern design cover. The cover is incredibly easy to fit, enhancing the style of the radiator. Available in three stunning colours.

FEATURES - TYPE 22 KEYNSHAM RADIATORS

- Tested to BS EN 442 standards
- Manufactured in automatic production lines
- Hot water central heating systems only
- Max operating pressure 4 bars
- Radiators come complete with fitted top grill & side panels
- Remove radiator's top grill & side panels to fit cover
- Radiators have 4 x 1/2" connections
- Radiator fixing kit included in packaging
- Powder coated in RAL 9016 Gloss White, Matt Anthracite or RAL 9005 Matt Black
- 10 Year Manufacturer's Warranty*

* With conditions

TECHNICAL INFORMATION (TYPE 22 RADIATOR)

All measurements in Height by Width. Heat outputs stated are based on ▲T30˚C & ▲T50˚C. Radiators are only suitable for two-pipe installations. Pipework installation is recommended after receipt of radiator. High quality mild steel material, 1.11mm thickness. Air vent and blanking plug included in installation kit. Tappings are the width of the radiator.

Manufacturer's Warranty 10 Years

Heating

UK CA CE

KEYNSHAM PANEL RADIATOR - GLOSS WHITE

Height H	Width W	Heat Output ΔT30°C		Heat Output ΔT50°C		Water Content / Litres	Weight / Kg	Code	£ Ex VAT	£ Inc VAT
mm	mm	Watts	BTU	Watts	BTU					
600	400	335	1143	660	2253	2.48	15.57	25.7016	556.28	**667.53**
	500	419	1429	825	2816	3.10	18.89	25.7017	646.83	**776.19**
	600	502	1715	990	3380	3.72	22.12	25.7018	738.44	**886.12**
	800	670	2287	1320	4506	4.96	28.75	25.7019	881.56	**1057.87**
	1000	837	2859	1650	5633	6.20	35.40	25.7020	1056.69	**1268.02**
	1200	1005	3430	1980	6760	7.44	41.96	25.7021	1239.84	**1487.80**

Radiator & Cover - Gloss White

KEYNSHAM PANEL RADIATOR - MATT ANTHRACITE

Height H	Width W	Heat Output ΔT30°C		Heat Output ΔT50°C		Water Content / Litres	Weight / Kg	Code	£ Ex VAT	£ Inc VAT
mm	mm	Watts	BTU	Watts	BTU					
600	400	335	1143	660	2253	2.48	15.57	25.7022	611.10	**733.32**
	600	502	1715	990	3380	3.72	22.12	25.7023	812.18	**974.61**
	800	670	2287	1320	4506	4.96	28.75	25.7024	969.22	**1163.06**
	1000	837	2859	1650	5633	6.20	35.40	25.7025	1163.26	**1395.91**
	1200	1005	3430	1980	6760	7.44	41.96	25.7026	1363.33	**1635.99**

Radiator & Cover - Matt Anthracite

KEYNSHAM PANEL RADIATOR - MATT BLACK

Height H	Width W	Heat Output ΔT30°C		Heat Output ΔT50°C		Water Content / Litres	Weight / Kg	Code	£ Ex VAT	£ Inc VAT
mm	mm	Watts	BTU	Watts	BTU					
600	400	335	1143	660	2253	2.48	15.57	25.7027	611.10	**733.32**
	600	502	1715	990	3380	3.72	22.12	25.7028	812.18	**974.61**
	800	670	2287	1320	4506	4.96	28.75	25.7029	969.22	**1163.06**
	1000	837	2859	1650	5633	6.20	35.40	25.7030	1163.26	**1395.91**
	1200	1005	3430	1980	6760	7.44	41.96	25.7031	1363.33	**1635.99**

Radiator & Cover - Matt Black

Flat Cover Plates

To be fitted on Eastbrook's Longden / Longbridge ranges only

Gloss White Cover

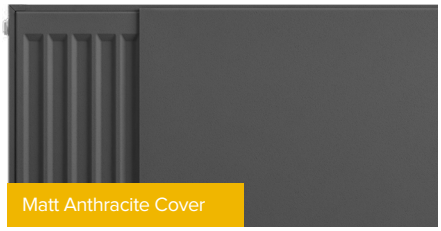

Matt Anthracite Cover

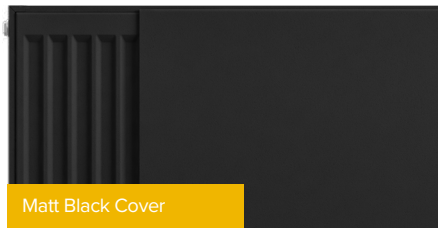

Matt Black Cover

FLAT COVER PLATES - GLOSS WHITE

Height H mm	Width W mm	Code	£ Ex VAT	£ Inc VAT
300	400	25.5000	252.00	**302.40**
	500	25.5001	265.00	**318.00**
	600	25.5002	279.00	**334.80**
	800	25.5003	305.00	**366.00**
	1000	25.5004	331.00	**397.20**
	1200	25.5005	357.00	**428.40**
	1400	25.5006	411.00	**493.20**
	1600	25.5007	437.00	**524.40**
	2000	25.5008	490.00	**588.00**

Height H mm	Width W mm	Code	£ Ex VAT	£ Inc VAT
400	400	25.5009	264.00	**316.80**
	500	25.5010	281.00	**337.20**
	600	25.5011	297.00	**356.40**
	700	25.5012	312.00	**374.40**
	800	25.5013	329.00	**394.80**
	900	25.5014	345.00	**414.00**
	1000	25.5015	361.00	**433.20**
	1100	25.5016	377.00	**452.40**
	1200	25.5017	393.00	**471.60**
	1400	25.5018	453.00	**543.60**
	1600	25.5019	486.00	**583.20**
	1800	25.5020	517.00	**620.40**
	2000	25.5021	550.00	**660.00**

Height H mm	Width W mm	Code	£ Ex VAT	£ Inc VAT
500	400	25.5022	277.00	**332.40**
	500	25.5023	296.00	**355.20**
	600	25.5024	315.00	**378.00**
	700	25.5025	334.00	**400.80**
	800	25.5026	353.00	**423.60**
	900	25.5027	372.00	**446.40**
	1000	25.5028	391.00	**469.20**
	1100	25.5029	410.00	**492.00**
	1200	25.5030	430.00	**516.00**
	1300	25.5031	476.00	**571.20**
	1400	25.5032	495.00	**594.00**
	1500	25.5033	514.00	**616.80**
	1600	25.5034	533.00	**639.60**
	1800	25.5035	572.00	**686.40**
	2000	25.5036	609.00	**730.80**

Height H mm	Width W mm	Code	£ Ex VAT	£ Inc VAT
600	400	25.5037	288.00	**345.60**
	500	25.5038	310.00	**372.00**
	600	25.5039	332.00	**398.40**
	700	25.5040	353.00	**423.60**
	800	25.5041	375.00	**450.00**
	900	25.5042	397.00	**476.40**
	1000	25.5043	409.00	**490.80**
	1100	25.5044	440.00	**528.00**
	1200	25.5045	462.00	**554.40**
	1300	25.5046	512.00	**614.40**
	1400	25.5047	534.00	**640.80**
	1500	25.5048	555.00	**666.00**
	1600	25.5049	577.00	**692.40**
	1800	25.5050	620.00	**744.00**
	2000	25.5051	664.00	**796.80**

Flat Cover Plate installation video

Quick & Easy!

FLAT COVER PLATES - MATT ANTHRACITE

Height H mm	Width W mm	Code	£ Ex VAT	£ Inc VAT
600	400	25.5052	288.00	**345.60**
	600	25.5053	332.00	**398.40**
	800	25.5054	375.00	**450.00**
	1000	25.5055	409.00	**490.80**
	1200	25.5056	462.00	**554.40**
	1400	25.5057	534.00	**640.80**
	1600	25.5058	577.00	**692.40**
	1800	25.5059	620.00	**744.00**

FLAT COVER PLATES - MATT BLACK

Height H mm	Width W mm	Code	£ Ex VAT	£ Inc VAT
600	400	25.5060	288.00	**345.60**
	600	25.5061	332.00	**398.40**
	800	25.5062	375.00	**450.00**
	1000	25.5063	409.00	**490.80**
	1200	25.5064	462.00	**554.40**
	1400	25.5065	534.00	**640.80**
	1600	25.5066	577.00	**692.40**
	1800	25.5067	620.00	**744.00**

FEATURES - FLAT COVER PLATES

- 1mm mild steel material
- Both sides finished in high quality powder coating that matches radiator colour
- Installation kit with clips & magnets included
- Quick & Easy installation, please see QR video
- Radiators sold separately
- 10 Year Manufacturer's Warranty*

* With conditions

Flat Cover Plates with Lines

To be fitted on Eastbrook's Longden / Longbridge ranges only

Gloss White Cover

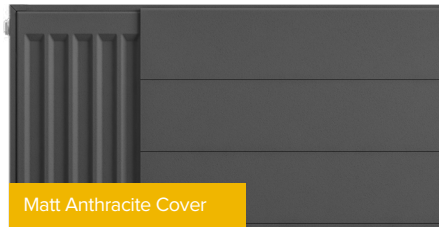

Matt Anthracite Cover

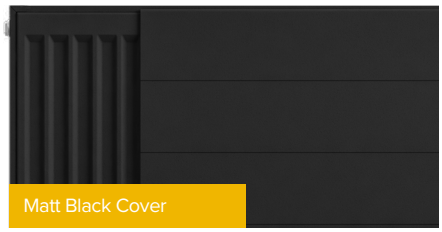

Matt Black Cover

FLAT COVER PLATES WITH LINES - GLOSS WHITE

Height H mm	Width W mm	Code	£ Ex VAT	£ Inc VAT
300	400	25.5068	258.00	**309.60**
	500	25.5069	270.00	**324.00**
	600	25.5070	284.00	**340.80**
	800	25.5071	310.00	**372.00**
	1000	25.5072	336.00	**403.20**
	1200	25.5073	363.00	**435.60**
	1400	25.5074	416.00	**499.20**
	1600	25.5075	443.00	**531.60**
	2000	25.5076	495.00	**594.00**

Height H mm	Width W mm	Code	£ Ex VAT	£ Inc VAT
400	400	25.5077	269.00	**322.80**
	500	25.5078	286.00	**343.20**
	600	25.5079	302.00	**362.40**
	700	25.5080	318.00	**381.60**
	800	25.5081	334.00	**400.80**
	900	25.5082	350.00	**420.00**
	1000	25.5083	366.00	**439.20**
	1100	25.5084	383.00	**459.60**
	1200	25.5085	398.00	**477.60**
	1400	25.5086	458.00	**549.60**
	1600	25.5087	491.00	**589.20**
	1800	25.5088	522.00	**626.40**
	2000	25.5089	555.00	**666.00**

Flat Cover Plate installation video

Quick & Easy!

Height H mm	Width W mm	Code	£ Ex VAT	£ Inc VAT
500	400	25.5090	282.00	**338.40**
	500	25.5091	301.00	**361.20**
	600	25.5092	321.00	**385.20**
	700	25.5093	340.00	**408.00**
	800	25.5094	359.00	**430.80**
	900	25.5095	377.00	**452.40**
	1000	25.5096	396.00	**475.20**
	1100	25.5097	415.00	**498.00**
	1200	25.5098	435.00	**522.00**
	1300	25.5099	481.00	**577.20**
	1400	25.5100	500.00	**600.00**
	1500	25.5101	519.00	**622.80**
	1600	25.5102	538.00	**645.60**
	1800	25.5103	577.00	**692.40**
	2000	25.5104	615.00	**738.00**

Height H mm	Width W mm	Code	£ Ex VAT	£ Inc VAT
600	400	25.5105	293.00	**351.60**
	500	25.5106	315.00	**378.00**
	600	25.5107	338.00	**405.60**
	700	25.5108	359.00	**430.80**
	800	25.5109	381.00	**457.20**
	900	25.5110	403.00	**483.60**
	1000	25.5111	414.00	**496.80**
	1100	25.5112	446.00	**535.20**
	1200	25.5113	468.00	**561.60**
	1300	25.5114	517.00	**620.40**
	1400	25.5115	539.00	**646.80**
	1500	25.5116	560.00	**672.00**
	1600	25.5117	582.00	**698.40**
	1800	25.5118	625.00	**750.00**
	2000	25.5119	669.00	**802.80**

FLAT COVER PLATES WITH LINES - MATT ANTHRACITE

Height H mm	Width W mm	Code	£ Ex VAT	£ Inc VAT
600	400	25.5120	293.00	**351.60**
	600	25.5121	338.00	**405.60**
	800	25.5122	381.00	**457.20**
	1000	25.5123	414.00	**496.80**
	1200	25.5124	468.00	**561.60**
	1400	25.5125	539.00	**646.80**
	1600	25.5126	582.00	**698.40**
	1800	25.5127	625.00	**750.00**

FLAT COVER PLATES WITH LINES - MATT BLACK

Height H mm	Width W mm	Code	£ Ex VAT	£ Inc VAT
600	400	25.5128	293.00	**351.60**
	600	25.5129	338.00	**405.60**
	800	25.5130	381.00	**457.20**
	1000	25.5131	414.00	**496.80**
	1200	25.5132	468.00	**561.60**
	1400	25.5133	539.00	**646.80**
	1600	25.5134	582.00	**698.40**
	1800	25.5135	625.00	**750.00**

FEATURES - FLAT COVER PLATES WITH LINES

- 1mm mild steel material
- Both sides finished in high quality powder coating that matches radiator colour
- Installation kit with clips & magnets included
- Quick & Easy installation, please see QR video
- Radiators sold separately
- 10 Year Manufacturer's Warranty*

* With conditions

• NEW COLOUR HERE •

Compact Panel Range

Compact Panel Radiator Towel Hangers

Towel Hangers - Gloss White

Description	Code	£ Ex VAT	£ Inc VAT
Towel Hanger 490mm. (for 600mm. width radiators)	25.5136	59.00	**70.80**
Towel Hanger 690mm. (for 800mm. width radiators)	25.5137	65.00	**78.00**
Towel Hanger 890mm. (for 1000mm width radiators)	25.5138	70.00	**84.00**

Fits on Longden / Longbridge ranges only

Towel Hangers - Anthracite

Description	Code	£ Ex VAT	£ Inc VAT
Towel Hanger 490mm. (for 600mm. width radiators)	25.5139	59.00	**70.80**
Towel Hanger 690mm. (for 800mm. width radiators)	25.5140	65.00	**78.00**
Towel Hanger 890mm. (for 1000mm width radiators)	25.5141	70.00	**84.00**

Fits on Longden / Longbridge ranges only

Towel Hangers - Black

Description	Code	£ Ex VAT	£ Inc VAT
Towel Hanger 490mm. (for 600mm. width radiators)	25.5142	59.00	**70.80**
Towel Hanger 690mm. (for 800mm. width radiators)	25.5143	65.00	**78.00**
Towel Hanger 890mm. (for 1000mm width radiators)	25.5144	70.00	**84.00**

Fits on Longden / Longbridge ranges only

Pipe Shrouds and Collar Kits (Slide On)

Pipe Shrouds and Collar Kits - Slide On

Description	Code	£ Ex VAT	£ Inc VAT
15mm Pipe Shroud & Collar Kit Gloss White	41.0597	23.00	**27.60**
15mm Pipe Shroud & Collar Kit Matt White	41.0598	23.00	**27.60**
15mm Pipe Shroud & Collar Kit Matt Grey	41.0599	23.00	**27.60**
15mm Pipe Shroud & Collar Kit Matt Cappuccino	41.0600	23.00	**27.60**
15mm Pipe Shroud & Collar Kit Matt Anthracite	41.0601	23.00	**27.60**
15mm Pipe Shroud & Collar Kit Matt Black	41.0602	23.00	**27.60**
15mm Pipe Shroud & Collar Kit Chrome	41.0603	21.00	**25.20**
15mm Pipe Shroud & Collar Kit Brushed Brass	41.0604	29.00	**34.80**
15mm Pipe Shroud & Collar Kit Satin Nickel	41.0605	29.00	**34.80**
15mm Pipe Shroud & Collar Kit Black Gold	41.0988	29.00	**34.80**
15mm Pipe Shroud & Collar Kit Brushed Gunmetal	41.0989	29.00	**34.80**
15mm Pipe Shroud & Collar Kit Brushed Bronze	41.1220	29.00	**34.80**

FEATURES
- Manufactured from high quality brass
- Suitable for 15mm pipes, must be fitted together with radiator installation
- Each kit includes two pipe shrouds and two collars
- Shroud length 200mm., can be cut to desired length

Pipe Shrouds and Collar Kits (Clip On)

Pipe Shrouds and Collar Kits - Clip On

Description	Code	£ Ex VAT	£ Inc VAT
15mm Pipe Shroud & Collar Kit White	92.0001	14.00	**16.80**
15mm Pipe Shroud & Collar Kit Chrome	92.0002	21.00	**25.20**
15mm Pipe Shroud & Collar Kit Anthracite	92.0003	15.00	**18.00**
15mm Pipe Shroud & Collar Kit Black	92.0004	15.00	**18.00**

FEATURES
- Manufactured from high grade polypropylene
- Suitable for 15mm pipes, easy-fit after radiator installation
- Available in white, anthracite, black and chrome
- Each kit includes two pipe shrouds and two collars
- Shroud length 200mm., can be cut to desired length
- Easy push-fit installation

Compact Panel Range

The Eastbrook compact panel radiators range offers 3 types of radiators in over 140 sizes and 3 colours; gloss white, matt anthracite and matt black that are available from stock.

Eastbrook compact panel radiators are produced in fully automated state-of-the-art production lines and each radiator is first degreased then zinc phosphated before being dipped in a water based cataphoretic paint. The final coat is applied by automatic robots using epoxy polyester electrostatic powder coating.

Our Longden Compact Panel Radiators are packed in heavy duty, protective packaging.
Full size front carton, side cartons, bubble wrap, front surface cardboard protection*, plastic corner protection and shrink wrap

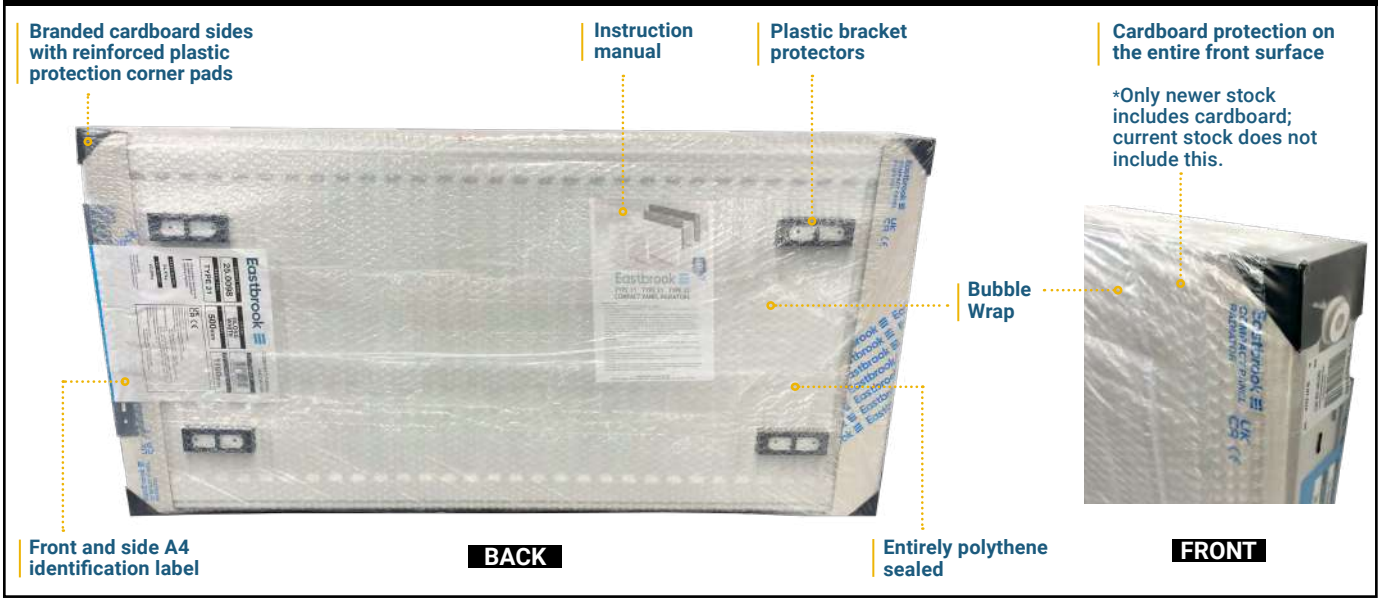

10 YEAR MANUFACTURER'S WARRANTY

Our compact panel radiators are individually tested and supplied complete with a 10 Year Manufacturer's Warranty against any manufacturing or material fault. All our compact panel radiators have a working pressure of 4 Bars.

COMPLETE WITH FIXING KITS

Each compact panel radiator is supplied with complete concealed wall brackets including air vent and blanking plug.

QUALITY

All our compact panel radiators are manufactured under ISO 9001:2015 and comply to UKCA & CE standards.

AFTERSALES

In the event of any questions or concerns, we have a dedicated Technical and Aftersales team that will be able to assist with regarding the installation of the radiators.

Important Installation Notes

- Compact panel radiators must be installed by a qualified engineer. Instruction manual is to be followed to avoid any issues during installation.
- Consider using an Eastbrook valve set to get the perfect colour match.
  Have your system vented properly. A general cause of corrosion and leak problems are due to trapped air in the system.
- Make sure that the drain points are at lowest in the system and your system is throughly flushed before commissioning.
- System must be clean of residues such as metal, flux etc, this can cause pin-holes.
  Do not over pump the system which will case negative pressure aeration that can also cause corrosion.
- It is recommended that an appropriately approved corrosion inhibitor must be subsequently added to the system in order to protect the radiator and other parts of the system to promote extended operating lifespan. Please ensure that, when adding inhibitor, not to underdose or overdose and follow the inhibitor instructions. The Ph level of the system water should be between 6.5 and 7.5.
- If the system water is too acidic then the metals in the system would corrode. If the system water is too alkaline, then there is a higher risk of electrolysis.
- Our compact panel radiators come with an instruction manual. Please follow the basic guidance above and in the instructions to protect your 10 year manufacturer's warranty and trouble free operating lifespan of your radiator.

Aluminium Range

A huge variety of contemporary aluminium radiators and towel rails, from flat panel to ladder rail styles to suit any room.

Statement piece accessory towel hangers complement both vertical and horizontal designs allowing room for towels.

Rosano Vertical & Horizontal, Available in 3 colours - **NEW SIZES**	196-199
Rosano Towel Hangers - **NEW SIZES**	200-201
Peretti Vertical & Horizontal, Available in 4 colours - **NEW SIZES**	202-205
Peretti Towel Hangers - **NEW SIZES**	206-207
Kingswood Slimline Vertical & Horizontal, Available in 3 colours	208-209
Kingswood Slimline Towel Rail, Available in 3 colours	210-211
Queenswood Vertical & Horizontal, Available in 3 colours	212-215
Mersey Vertical, Available in 3 colours	216-217
Trent Vertical, Available in 3 colours	218-219
Addington Aluminium Type10, Gloss White & Matt Anthracite	220-223
Addington Aluminium Type20, Gloss White & Matt Anthracite	224-227
Charlton Vertical & Horizontal, Available in 3 colours	228-231
Charlton Towel Hangers	232-233
Withington Vertical & Horizontal, Available in 4 colours	234-237
Withington Towel Hangers	238-239
Malmesbury Vertical & Horizontal, Available in 4 colours	240-244
Malmesbury Towel Hangers	245
Berkeley Horizontal, Available in 3 colours	246-247
Tordino Vertical & Horizontal, Available in 4 colours	248-250
Tordino Towel Hangers	251
Guardia Vertical & Horizontal, Available in 4 colours	252-255
Hadleigh Vertical & Horizontal, Available in 3 colours	256-259
Vesima Vertical & Horizontal, Available in 3 colours	260-263
Preston Vertical, Available in 3 colours	264-265
Berlini Vertical, Available in 4 colours	266-267
Fairford Vertical & Horizontal, Matt White & Matt Anthracite	268-269
Burford Vertical & Horizontal, Matt White & Matt Anthracite	270-271
Kelmscott Vertical & Horizontal, Matt White & Matt Anthracite	272-273
Witney Vertical & Horizontal, Matt White & Matt Anthracite	274-275

• NEW SIZES HERE •

Aluminium Range

ROSANO VERTICAL

Pictured 99.0008 Matt Anthracite with 101.0085 Towel Hanger x1 & 86.0112 Cover Caps x2 (Side connection valves shown)

Pictured 99.0004 Matt White with 101.0049 Towel Hanger x1 & 86.0112 Cover Caps x2 (Side connection valves shown)

A luxurious flat panelled radiator range with stunning clean lines which will be the focus of any room. Available in a choice of colours and in horizontal or vertical designs. Stunning towel hangers will complement the vertical design allowing room for your towels.

Warranty 5 Year | Heating | All Electric | Dual-Fuel

Technical Tables & Drawings
Page 404-405

TECHNICAL INFORMATION

All measurements in Height by Width. For matching valves see pages 338-353. Corrosion inhibitor must be added to the heating system and maintained. Flow diverter must only be fitted when radiator installed on central heating system. For indirect heating systems only. **Side connection:** Tappings are the width of the rail and 35 or 55mm off the wall. **Bottom connection:** Tappings are 90mm less than the width of the rail and 35 or 55mm off the wall.

Aluminium Range

ROSANO VERTICAL

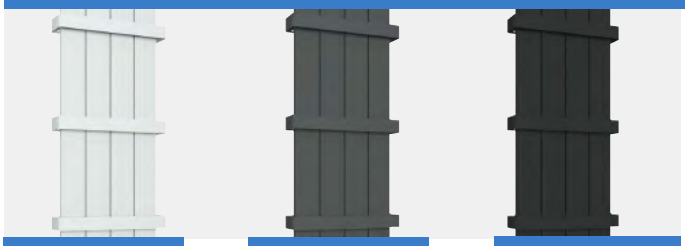

Matt White | Matt Anthracite | Matt Black

Pictured 99.0005 Matt Anthracite with 86.0026 Towel Hangers (bottom connection valves shown)

For all Rosano Matt White, Matt Anthacite, Matt Black, Chrome and Premium Towel Hangers, please refer to page 200-201.

Rosano Vertical Aluminium Radiators - Matt White

Size H x W	Delta △T30 Watts	Delta △T30 BTU	Delta △T50 Watts	Delta △T50 BTU	Element Output	Code	£ Ex VAT	£ Inc VAT
600 x 280mm	124	423	243	829	150W	99.0147	171.00	**205.20**
1200 x 280mm	229	781	455	1552	300W	99.0604	206.00	**247.20**
1200 x 375mm	305	1041	606	2067	450W	99.0607	264.00	**316.80**
1200 x 470mm	381	1300	758	2585	600W	99.0610	323.00	**387.60**
1200 x 565mm	458	1562	909	3100	600W	99.0613	388.00	**465.60**
1200 x 660mm	534	1821	1061	3619	750W	99.0616	438.00	**525.60**
1800 x 280mm	322	1099	643	2193	450W	99.0001	309.00	**370.80**
1800 x 375mm	429	1463	857	2923	750W	99.0004	397.00	**476.40**
1800 x 470mm	536	1828	1071	3653	900W	99.0007	485.00	**582.00**
1800 x 565mm	643	2193	1285	4382	1000W	86.0284	581.00	**697.20**
1800 x 660mm	811*	2766*	1611*	5494*	1200W	99.0600	656.00	**787.20**

Rosano Vertical Aluminium Radiators - Matt Anthracite

Size H x W	Delta △T30 Watts	Delta △T30 BTU	Delta △T50 Watts	Delta △T50 BTU	Element Output	Code	£ Ex VAT	£ Inc VAT
600 x 280mm	124	423	243	829	150W	86.0148	171.00	**205.20**
1200 x 280mm	229	781	455	1552	300W	99.0605	206.00	**247.20**
1200 x 375mm	305	1041	606	2067	450W	99.0608	264.00	**316.80**
1200 x 470mm	381	1300	758	2585	600W	99.0611	323.00	**387.60**
1200 x 565mm	458	1562	909	3100	600W	99.0614	388.00	**465.60**
1200 x 660mm	534	1821	1061	3619	750W	99.0617	438.00	**525.60**
1800 x 280mm	322	1099	643	2193	450W	99.0002	309.00	**370.80**
1800 x 375mm	429	1463	857	2923	750W	99.0005	397.00	**476.40**
1800 x 470mm	536	1828	1071	3653	900W	99.0008	485.00	**582.00**
1800 x 565mm	643	2193	1285	4382	1000W	99.0285	581.00	**697.20**
1800 x 660mm	811*	2766*	1611*	5494*	1200W	99.0601	656.00	**787.20**

Rosano Vertical Aluminium Radiators - Matt Black

Size H x W	Delta △T30 Watts	Delta △T30 BTU	Delta △T50 Watts	Delta △T50 BTU	Element Output	Code	£ Ex VAT	£ Inc VAT
600 x 280mm	124	423	243	829	150W	86.0149	171.00	**205.20**
1200 x 280mm	229	781	455	1552	300W	99.0606	206.00	**247.20**
1200 x 375mm	305	1041	606	2067	450W	99.0609	264.00	**316.80**
1200 x 470mm	381	1300	758	2585	600W	99.0612	323.00	**387.60**
1200 x 565mm	458	1562	909	3100	600W	99.0615	388.00	**465.60**
1200 x 660mm	534	1821	1061	3619	750W	99.0618	438.00	**525.60**
1800 x 280mm	322	1099	643	2193	450W	86.0003	309.00	**370.80**
1800 x 375mm	429	1463	857	2923	750W	99.0006	460.00	**552.00**
1800 x 470mm	536	1828	1071	3653	900W	99.0009	485.00	**582.00**
1800 x 565mm	643	2193	1285	4382	1000W	86.0286	581.00	**697.20**
1800 x 660mm	811*	2766*	1611*	5494*	1200W	99.0602	656.00	**787.20**

Prices include radiator and wall fixing sets, valves and accessories extra.

* Further heat output information available on eastbrooktrade.com **E&OA**

All Rosano models shown above are compatible with Element Type A and A+

Rosano Cover Cap Sets - Chrome

Description	Code	£ Ex VAT	£ Inc VAT
Cover Cap Set 280mm	86.0111	21.00	**25.20**
Cover Cap Set 375mm	86.0112	26.00	**31.20**
Cover Cap Set 470mm	86.0113	30.00	**36.00**
Cover Cap Set 565mm	86.0309	35.00	**42.00**

Cover cap sets only include cover caps for the top or bottom of the radiator.

FEATURES

- Excellent heat conductivity and lightweight
- Only requires a low water volume
- Heats up very quickly
- Side or bottom connection options (only on vertical sizes)
- Tested to BS EN 442 standards
- 5 Year Manufacturer's Warranty*
- Can be single or dual fuel, or all electric
- Radiators come with cover caps on top and bottom, the same colour as the radiator

* With conditions

For element types see pages 324-337.

Element can be installed vertically on the right-hand side or left-hand side on the bottom header. Radiators that are electric only are restricted to the heat output of the elements. For dual fuel installations, element must be installed on flow side.

• NEW SIZES HERE •

Aluminium Range

ROSANO HORIZONTAL

Pictured 86.0016 Matt White

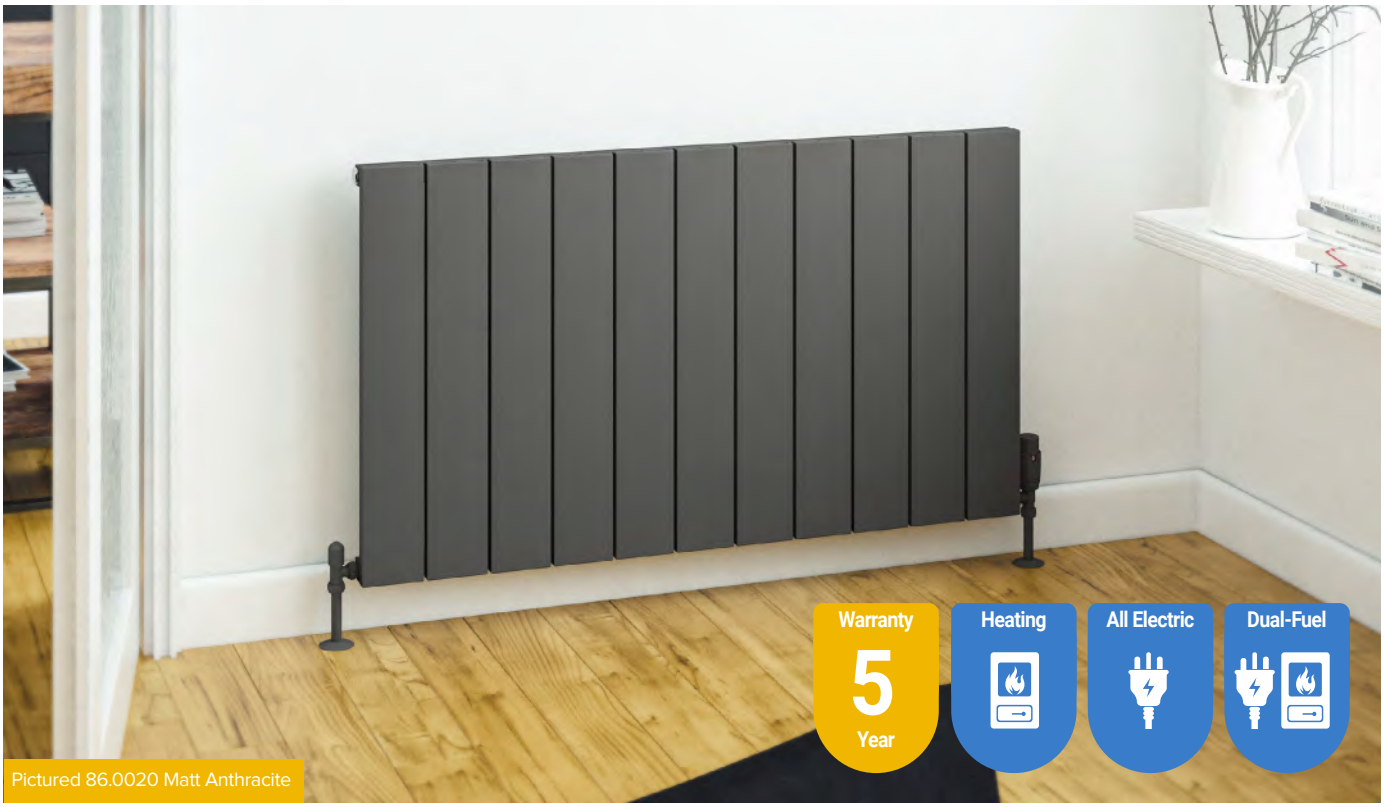

Pictured 86.0020 Matt Anthracite

A luxurious flat panelled radiator range with stunning clean lines which will be the focus of any room. Available in a choice of colours and in horizontal or vertical designs.

TECHNICAL INFORMATION

All measurements in Height by Width. For matching valves see pages 338-353. Corrosion inhibitor must be added to the heating system and maintained. Flow diverter must only be fitted when radiator installed on central heating system. For indirect heating systems only. Tappings are the width of the rail and 35 or 55mm off the wall.

Radiator Valves
Page 338-353

Aluminium Range

ROSANO HORIZONTAL

Technical Tables & Drawings
Page 404-405

Rosano Horizontal Aluminium Radiators - Matt White

Size H x W	Delta △T30 Watts	Delta △T30 BTU	Delta △T50 Watts	Delta △T50 BTU	Element Output	Code	£ Ex VAT	£ Inc VAT
600 x 470mm	207	706	405	1382	300W	86.0010	240.00	**288.00**
600 x 660mm	289	986	568	1937	450W	99.0013	319.00	**382.80**
600 x 850mm	372	1269	730	2490	600W	86.0016	397.00	**476.40**
600 x 1040mm	455	1552	892	3042	750W	99.0019	475.00	**570.00**
600 x 1230mm	537	1832	1054	3595	900W	86.0022	553.00	**663.60**
600 x 1420mm	582*	1985*	1156*	3942*	900W	99.0619	629.00	**754.80**
600 x 1610mm	660*	2251*	1310*	4468*	1000W	99.0622	701.00	**841.20**

Rosano Horizontal Aluminium Radiators - Matt Anthracite

Size H x W	Delta △T30 Watts	Delta △T30 BTU	Delta △T50 Watts	Delta △T50 BTU	Element Output	Code	£ Ex VAT	£ Inc VAT
600 x 470mm	207	706	405	1382	300W	86.0011	240.00	**288.00**
600 x 660mm	289	986	568	1937	450W	86.0014	319.00	**382.80**
600 x 850mm	372	1269	730	2490	600W	99.0017	397.00	**476.40**
600 x 1040mm	455	1552	892	3042	750W	86.0020	475.00	**570.00**
600 x 1230mm	537	1832	1054	3595	900W	86.0023	553.00	**663.60**
600 x 1420mm	582*	1985*	1156*	3942*	900W	99.0620	629.00	**754.80**
600 x 1610mm	660*	2251*	1310*	4468*	1000W	99.0623	701.00	**841.20**

Rosano Vertical Aluminium Radiators - Matt Black

Size H x W	Delta △T30 Watts	Delta △T30 BTU	Delta △T50 Watts	Delta △T50 BTU	Element Output	Code	£ Ex VAT	£ Inc VAT
600 x 470mm	207	706	405	1382	300W	99.0012	240.00	**288.00**
600 x 660mm	289	986	568	1937	450W	86.0015	319.00	**382.80**
600 x 850mm	372	1269	730	2490	600W	86.0018	397.00	**476.40**
600 x 1040mm	455	1552	892	3042	750W	86.0021	475.00	**570.00**
600 x 1230mm	537	1832	1054	3595	900W	86.0024	553.00	**663.60**
600 x 1420mm	582*	1985*	1156*	3942*	900W	99.0621	629.00	**754.80**
600 x 1610mm	660*	2251*	1310*	4468*	1000W	99.0624	701.00	**841.20**

Prices include radiator and wall fixing sets, valves and accessories extra.

* Further heat output information available on eastbrooktrade.com **E&OA**

All Rosano models shown above are compatible with Element Type A, A+, C and H

FEATURES

- Excellent heat conductivity and lightweight
- Only requires a low water volume
- Heats up very quickly
- Tested to BS EN 442 standards
- 5 Year Manufacturer's Warranty*
- Can be single or dual fuel, or all electric
- Radiators come with cover caps on top and bottom, the same colour as the radiator

* With conditions

Matt White

Matt Anthracite

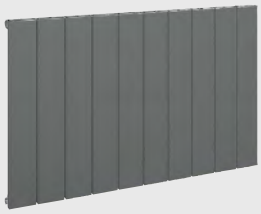

Matt Black

For all Rosano Matt White, Matt Anthacite, Matt Black, Chrome and Premium Towel Hangers, please refer to page 200-201.

Rosano Cover Cap Sets - Chrome

Description	Code	£ Ex VAT	£ Inc VAT
Cover Cap Set 470mm	86.0113	30.00	**36.00**
Cover Cap Set 660mm	86.0114	40.00	**48.00**
Cover Cap Set 850mm	86.0115	49.00	**58.80**
Cover Cap Set 1040mm	86.0116	58.00	**69.60**
Cover Cap Set 1230mm	86.0117	67.00	**80.40**

Cover cap sets only include cover caps for the top or bottom of the radiator.

For element types see pages 324-337.

Element can only be installed horizontally on the bottom header. Radiators that are electric only are restricted to the heat output of the elements (Type C&H up to 900 watts).

• NEW SIZES HERE •

Aluminium Range

ROSANO STANDARD TOWEL HANGERS

Towel Hanger - Matt White

Size	Code	£ Ex VAT	£ Inc VAT
280mm	89.0177	62.00	**74.40**
375mm	89.0178	66.00	**79.20**
470mm	89.0179	74.00	**88.80**
565mm	86.0333	78.00	**93.60**
660mm	101.0181	82.00	**98.40**

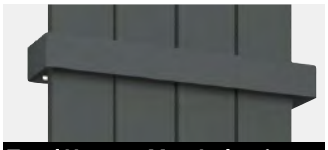

Towel Hanger - Matt Anthracite

Size	Code	£ Ex VAT	£ Inc VAT
280mm	89.0180	62.00	**74.40**
375mm	89.0181	66.00	**79.20**
470mm	89.0182	74.00	**88.80**
565mm	86.0334	78.00	**93.60**
660mm	101.0182	82.00	**98.40**

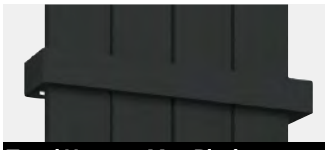

Towel Hanger - Matt Black

Size	Code	£ Ex VAT	£ Inc VAT
280mm	89.0183	62.00	**74.40**
375mm	89.0184	66.00	**79.20**
470mm	89.0185	74.00	**88.80**
565mm	86.0335	78.00	**93.60**
660mm	101.0183	82.00	**98.40**

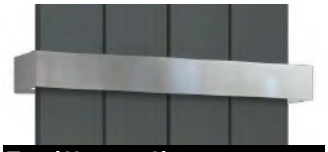

Towel Hanger - Chrome

Size	Code	£ Ex VAT	£ Inc VAT
280mm	86.0025	53.00	**63.60**
375mm	86.0026	62.00	**74.40**
470mm	86.0027	69.00	**82.80**
565mm	86.0336	72.00	**86.40**
660mm	101.0184	77.00	**92.40**

TECHNICAL INFORMATION

Material: **Steel (Premium: Stainless Steel - Grade 304)**

1800mm height radiators come with 3 pre-drilled towel hanger locations with a maximum of 3 towel hangers - all widths; 280, 375, 470, 565 and 660mm. and 1200mm height radiators come with 2 pre-drilled towel hanger locations with a max. of 2 towel hangers. 600mm height radiators come with 1 pre-drilled towel hanger location, with a maximum of 1 towel hanger - 280mm width. The Rosano Standard Towel Hangers will add approx 8mm width on each side once fitted to the radiator.

600mm height x 470mm width radiator can have one towel hanger.

Can be fitted after installation only on high adjustment bracket fitting.

Towel Hanger - Brushed Brass

Size	Code	£ Ex VAT	£ Inc VAT
280mm	41.0616	56.00	**67.20**
375mm	41.0617	63.00	**75.60**
470mm	41.0618	72.00	**86.40**
565mm	41.0619	76.00	**91.20**

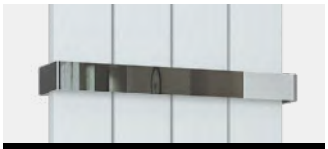

Towel Hanger - Mirror Polished Premium

Size	Code	£ Ex VAT	£ Inc VAT
280mm	86.0198	73.00	**87.60**
375mm	86.0199	80.00	**96.00**
470mm	86.0200	87.00	**104.40**
565mm	86.0337	93.00	**111.60**
660mm	101.0185	98.00	**117.60**

ROSANO FLAT STYLE TOWEL HANGERS

SINGLE FLAT STYLE

Towel Hanger - Matt White

Size	Code	£ Ex VAT	£ Inc VAT
280mm	89.0283	72.00	**86.40**
375mm	89.0284	79.00	**94.80**
470mm	89.0285	89.00	**106.80**
565mm	91.0163	95.00	**114.00**
660mm	89.0286	100.00	**120.00**
850mm	89.0287	112.00	**134.40**

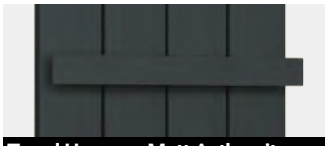

Towel Hanger - Matt Anthracite

Size	Code	£ Ex VAT	£ Inc VAT
280mm	89.0288	72.00	**86.40**
375mm	89.0289	79.00	**94.80**
470mm	89.0290	89.00	**106.80**
565mm	91.0164	95.00	**114.00**
660mm	89.0291	100.00	**120.00**
850mm	89.0292	112.00	**134.40**

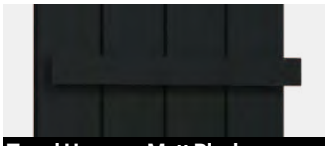

Towel Hanger - Matt Black

Size	Code	£ Ex VAT	£ Inc VAT
280mm	89.0293	72.00	**86.40**
375mm	89.0294	79.00	**94.80**
470mm	89.0295	89.00	**106.80**
565mm	91.0165	95.00	**114.00**
660mm	89.0296	100.00	**120.00**
850mm	89.0297	112.00	**134.40**

Towel Hanger - Chrome

Size	Code	£ Ex VAT	£ Inc VAT
280mm	91.0094	98.00	**117.60**
375mm	91.0095	100.00	**120.00**
470mm	91.0096	102.00	**122.40**
565mm	91.0166	103.00	**123.60**
660mm	91.0097	108.00	**129.60**
850mm	91.0098	115.00	**138.00**

DOUBLE FLAT STYLE

Towel Hanger - Matt White

Size	Code	£ Ex VAT	£ Inc VAT
280mm	89.0369	88.00	**105.60**
375mm	89.0370	92.00	**110.40**
470mm	89.0371	103.00	**123.60**
565mm	91.0167	114.00	**136.80**
660mm	89.0372	121.00	**145.20**
850mm	89.0373	135.00	**162.00**

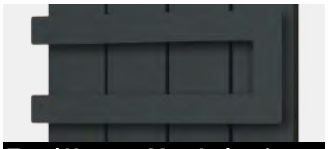

Towel Hanger - Matt Anthracite

Size	Code	£ Ex VAT	£ Inc VAT
280mm	89.0374	88.00	**105.60**
375mm	89.0375	92.00	**110.40**
470mm	89.0376	103.00	**123.60**
565mm	91.0168	114.00	**136.80**
660mm	89.0377	121.00	**145.20**
850mm	89.0378	135.00	**162.00**

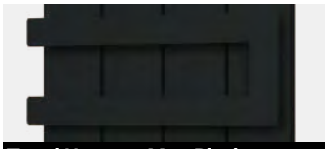

Towel Hanger - Matt Black

Size	Code	£ Ex VAT	£ Inc VAT
280mm	89.0379	88.00	**105.60**
375mm	89.0380	92.00	**110.40**
470mm	89.0381	103.00	**123.60**
565mm	91.0169	114.00	**136.80**
660mm	89.0382	121.00	**145.20**
850mm	89.0383	135.00	**162.00**

Towel Hanger - Chrome

Size	Code	£ Ex VAT	£ Inc VAT
280mm	91.0114	124.00	**148.80**
375mm	91.0115	130.00	**156.00**
470mm	91.0116	132.00	**158.40**
565mm	91.0170	138.00	**165.60**
660mm	91.0117	142.00	**170.40**
850mm	91.0118	154.00	**184.80**

TECHNICAL INFORMATION

Material: **Steel**

Vertical and Horizontal Radiators:

Flat & Double Flat Style Hangers are compatible with both Vertical and Horizontal radiators.(Depending on the radiators and hangers width)

Must be fitted before installation!

Hanger Fitting Widths
96/191/286/381/476/666mm

Hanger Fitting Widths
96/191/286/381/476/666mm

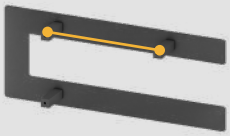

Aluminium Range

ROSANO FLAT TRIPLE TOWEL HANGER

Brushed Stainless Steel

Polished Stainless Steel

Flat Triple Hanger - Brushed Stainless Steel

Size	Code	£ Ex VAT	£ Inc VAT
280mm	101.0048	240.00	**288.00**
375mm	101.0049	261.00	**313.20**
470mm	101.0050	299.00	**358.80**
565mm	101.0064	335.00	**402.00**

Flat Triple Hanger - Polished Stainless Steel

Size	Code	£ Ex VAT	£ Inc VAT
280mm	101.0054	240.00	**288.00**
375mm	101.0055	261.00	**313.20**
470mm	101.0056	299.00	**358.80**
565mm	101.0065	335.00	**402.00**

ROSANO CURVED TRIPLE TOWEL HANGER

Brushed Stainless Steel

Polished Stainless Steel

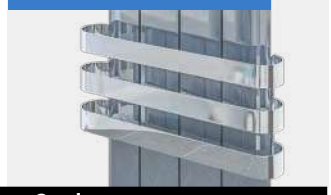

Curved Triple Hanger - Brushed Stainless Steel

Size	Code	£ Ex VAT	£ Inc VAT
280mm	101.0051	240.00	**288.00**
375mm	101.0052	261.00	**313.20**
470mm	101.0053	299.00	**358.80**
565mm	101.0066	335.00	**402.00**

Curved Triple Hanger - Polished Stainless Steel

Size	Code	£ Ex VAT	£ Inc VAT
280mm	101.0057	240.00	**288.00**
375mm	101.0058	261.00	**313.20**
470mm	101.0059	299.00	**358.80**
565mm	101.0067	335.00	**402.00**

TECHNICAL INFORMATION

Material: **Stainless Steel - Grade 304**

Vertical Radiators:

1800mm height radiators comes with 3 pre-drilled towel hanger locations. 600mm height radiators come with 1 pre-drilled towel hanger location. The flat triple & curved triple towel hangers are only compatible with the Vertical Radiators and can be fitted to the pre-drilled holes on 1800mm & 600mm height radiators. **Can be fitted after installation only on high adjustment bracket fitting.**

Horizontal Radiators:

The flat triple & curved triple towel hangers are not suitable for horizontal radiators.

ROSANO DESIGNER TOWEL HANGERS

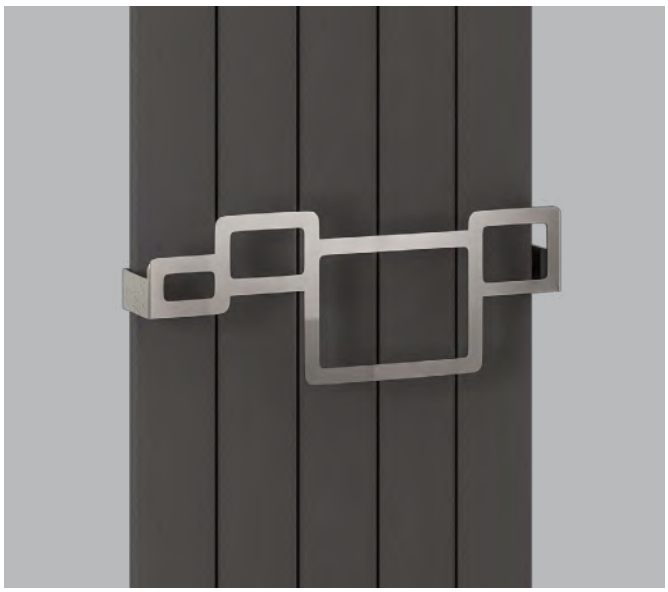

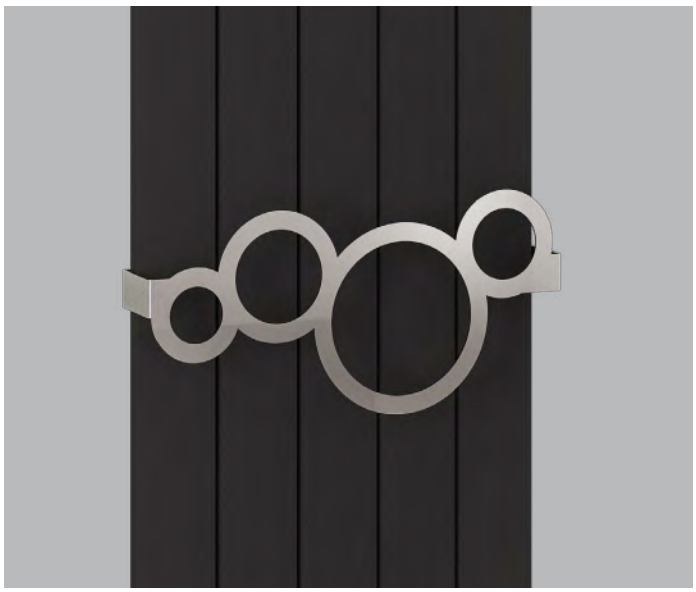

Square Style

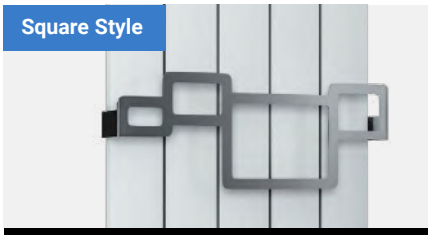

Square Towel Hanger - Chrome

Size	Code	£ Ex VAT	£ Inc VAT
375mm	101.0084	83.00	**99.60**
470mm	101.0085	96.00	**115.20**
565mm	101.0086	112.00	**134.40**

Circle Style

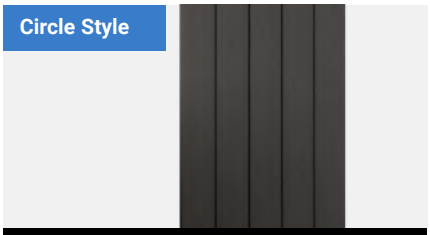

Circle Towel Hanger - Chrome

Size	Code	£ Ex VAT	£ Inc VAT
375mm	101.0108	84.00	**100.80**
470mm	101.0109	98.00	**117.60**
565mm	101.0110	116.00	**139.20**

TECHNICAL INFORMATION

Material: **Steel**

Square, Triangle and Circle Towel Hangers are only compatible with vertical radiators and can be fitted to one of the three pre-drilled holes on the 1800mm height radiators and to one of the two pre-drilled holes of the 1200mm height radiators. Square, Triangle and Circle Towel Hangers will add approx 8mm width on each side once fitted to the radiator. **Can be fitted after installation only on high adjustment bracket fitting.**

• NEW SIZES HERE •

Aluminium Range

PERETTI VERTICAL

Side or Bottom connection options

Pictured 99.0178 Polished Aluminium with 86.0078 Towel Hangers (side connection valves shown)

Pictured 99.0061 Matt Black with 101.0109 Towel Hanger x1 (bottom connection valves shown)

A refined version of the designer flat panelled radiators with a curve to the end two panels. This radiator will add a touch of sophistication creating an impact in any room. Available in both vertical and horizontal designs as well as four different colours for maximium choice. Stunning towel hangers will complement the vertical design allowing room for your towels.

Warranty 5 Year | Heating | All Electric | Dual-Fuel

FEATURES

- Excellent heat conductivity and lightweight
- Only requires a low water volume
- Heats up very quickly
- Side or bottom connection options (only on vertical sizes)
- Tested to BS EN 442 standards
- 5 Year Manufacturer's Warranty*
- Can be single or dual fuel, or all electric
- Radiators come with cover caps on top and bottom, the same colour as the radiator

* With conditions

Technical Tables & Drawings
Page 404-405

TECHNICAL INFORMATION

All measurements in Height by Width. For matching valves see pages 338-353. Corrosion inhibitor must be added to the heating system and maintained. Flow diverter must only be fitted when radiator installed on central heating system. For indirect heating systems only. **Side connection:** Tappings are the width of the rail and 35 or 55mm off the wall. **Bottom connection:** Tappings are 90mm less than the width of the rail and 35 or 55mm off the wall.

For all Peretti Matt White, Matt Anthacite, Matt Black, Chrome and Premium Towel Hangers, please refer to page 206-207.

Aluminium Range

PERETTI VERTICAL

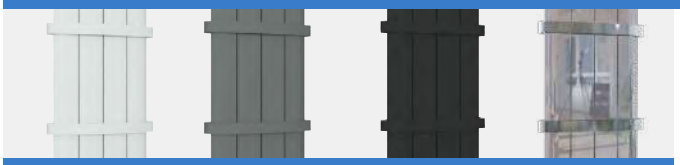

Matt White | Matt Anthracite | Matt Black | Polished

Pictured 99.0056 Matt White (side connection valves shown)

Peretti Vertical Aluminium Radiators - Matt White

Size H x W	Delta △T30 Watts	Delta △T30 BTU	Delta △T50 Watts	Delta △T50 BTU	Element Output	Code	£ Ex VAT	£ Inc VAT
600 x 280mm	121	413	240	819	150W	99.0150	171.00	**205.20**
1200 x 280mm	222	758	443	1511	300W	99.0629	206.00	**247.20**
1200 x 375mm	296	1010	591	2016	300W	99.0632	264.00	**316.80**
1200 x 470mm	370	1262	738	2517	600W	99.0635	323.00	**387.60**
1200 x 565mm	444	1515	886	3022	600W	99.0638	388.00	**465.60**
1200 x 660mm	518	1767	1034	3526	750W	99.0641	438.00	**525.60**
1800 x 280mm	317	1081	631	2152	450W	99.0053	309.00	**370.80**
1800 x 375mm	422	1440	841	2868	750W	99.0056	397.00	**476.40**
1800 x 470mm	528	1801	1051	3584	900W	99.0059	485.00	**582.00**
1800 x 565mm	633	2159	1262	4304	1000W	99.0287	581.00	**697.20**
1800 x 660mm	785*	2677*	1566*	5341*	1200W	99.0625	656.00	**787.20**

Peretti Vertical Aluminium Radiators - Matt Anthracite

Size H x W	Delta △T30 Watts	Delta △T30 BTU	Delta △T50 Watts	Delta △T50 BTU	Element Output	Code	£ Ex VAT	£ Inc VAT
600 x 280mm	121	413	240	819	150W	86.0151	171.00	**205.20**
1200 x 280mm	222	758	443	1511	300W	99.0630	206.00	**247.20**
1200 x 375mm	296	1010	591	2016	300W	99.0633	264.00	**316.80**
1200 x 470mm	370	1262	738	2517	600W	99.0636	323.00	**387.60**
1200 x 565mm	444	1515	886	3022	600W	99.0639	388.00	**465.60**
1200 x 660mm	518	1767	1034	3526	750W	99.0642	438.00	**525.60**
1800 x 280mm	317	1081	631	2152	450W	99.0054	309.00	**370.80**
1800 x 375mm	422	1440	841	2868	750W	99.0057	460.00	**552.00**
1800 x 470mm	528	1801	1051	3584	900W	99.0060	562.00	**674.40**
1800 x 565mm	633	2159	1262	4304	1000W	99.0288	682.00	**818.40**
1800 x 660mm	785*	2677*	1566*	5341*	1200W	99.0626	656.00	**787.20**

Peretti Vertical Aluminium Radiators - Matt Black

Size H x W	Delta △T30 Watts	Delta △T30 BTU	Delta △T50 Watts	Delta △T50 BTU	Element Output	Code	£ Ex VAT	£ Inc VAT
600 x 280mm	121	413	240	819	150W	86.0152	171.00	**205.20**
1200 x 280mm	222	758	443	1511	300W	99.0631	206.00	**247.20**
1200 x 375mm	296	1010	591	2016	300W	99.0634	264.00	**316.80**
1200 x 470mm	370	1262	738	2517	600W	99.0637	323.00	**387.60**
1200 x 565mm	444	1515	886	3022	600W	99.0640	388.00	**465.60**
1200 x 660mm	518	1767	1034	3526	750W	99.0643	438.00	**525.60**
1800 x 280mm	317	1081	631	2152	450W	99.0055	309.00	**370.80**
1800 x 375mm	422	1440	841	2868	750W	99.0058	397.00	**476.40**
1800 x 470mm	528	1801	1051	3584	900W	99.0061	485.00	**582.00**
1800 x 565mm	633	2159	1262	4304	1000W	99.0289	581.00	**697.20**
1800 x 660mm	785*	2677*	1566*	5341*	1200W	99.0627	656.00	**787.20**

Peretti Vertical Aluminium Radiators - Polished Aluminium

Size H x W	Delta △T30 Watts	Delta △T30 BTU	Delta △T50 Watts	Delta △T50 BTU	Element Output	Code	£ Ex VAT	£ Inc VAT
600 x 280mm	116	396	228	778	150W	86.0176	192.00	**230.40**
1800 x 280mm	298	1017	594	2026	450W	86.0177	347.00	**416.40**
1800 x 375mm	398	1358	792	2701	750W	99.0178	446.00	**535.20**
1800 x 470mm	497	1695	990	3376	900W	99.0179	545.00	**654.00**
1800 x 565mm	596	2033	1188	4052	1000W	99.0290	654.00	**784.80**
1800 x 660mm	740*	2524*	1476*	5034*	1200W	99.0628	743.00	**891.60**

Prices include radiator and wall fixing sets, valves and accessories extra.

* Further heat output information available on eastbrooktrade.com **E&OA**

All Peretti models shown above are compatible with Element Type A and A+

Peretti Cover Cap Sets - Chrome

Description	Code	£ Ex VAT	£ Inc VAT
Cover Cap Set 280mm	86.0125	21.00	**25.20**
Cover Cap Set 375mm	86.0126	26.00	**31.20**
Cover Cap Set 470mm	86.0127	31.00	**37.20**
Cover Cap Set 565mm	86.0310	35.00	**42.00**

Cover cap sets only include cover caps for the top or bottom of the radiator.

For element types see pages 324-337.

Element can be installed vertically on the right-hand side or left-hand side on the bottom header. Radiators that are electric only are restricted to the heat output of the elements.

• NEW SIZES HERE •

Aluminium Range

PERETTI HORIZONTAL

Pictured 99.0071 Matt White

Pictured 99.0069 Matt Anthracite with 89.0290 Towel Hanger

A refined version of the designer flat panelled radiators with a curve to the end two panels. This radiator will add a touch of sophistication creating an impact in any room. Available in both vertical and horizontal designs as well as four different colours for maximium choice. Stunning towel hangers will complement the vertical design allowing room for your towels.

FEATURES

- Excellent heat conductivity and lightweight
- Only requires a low water volume
- Heats up very quickly
- Tested to BS EN 442 standards
- 5 Year Manufacturer's Warranty*
- Can be single or dual fuel, or all electric
- Radiators come with cover caps on top and bottom, the same colour as the radiator

* With conditions

Technical Tables & Drawings
Page 404-405

TECHNICAL INFORMATION

All measurements in Height by Width. For matching valves see pages 338-353. Corrosion inhibitor must be added to the heating system and maintained. Flow diverter must only be fitted when radiator installed on central heating system. For indirect heating systems only. Tappings are the width of the rail and 35 or 55mm off the wall.

For all Peretti Matt White, Matt Anthacite, Matt Black, Chrome and Premium Towel Hangers, please refer to page 206-207.

Radiator Valves
Page 338-353

For element types see pages 324-337.

Element can only be installed horizontally on the bottom header. Radiators that are electric only are restricted to the heat output of the elements (Type C&H up to 900 watts).

Aluminium Range

PERETTI HORIZONTAL

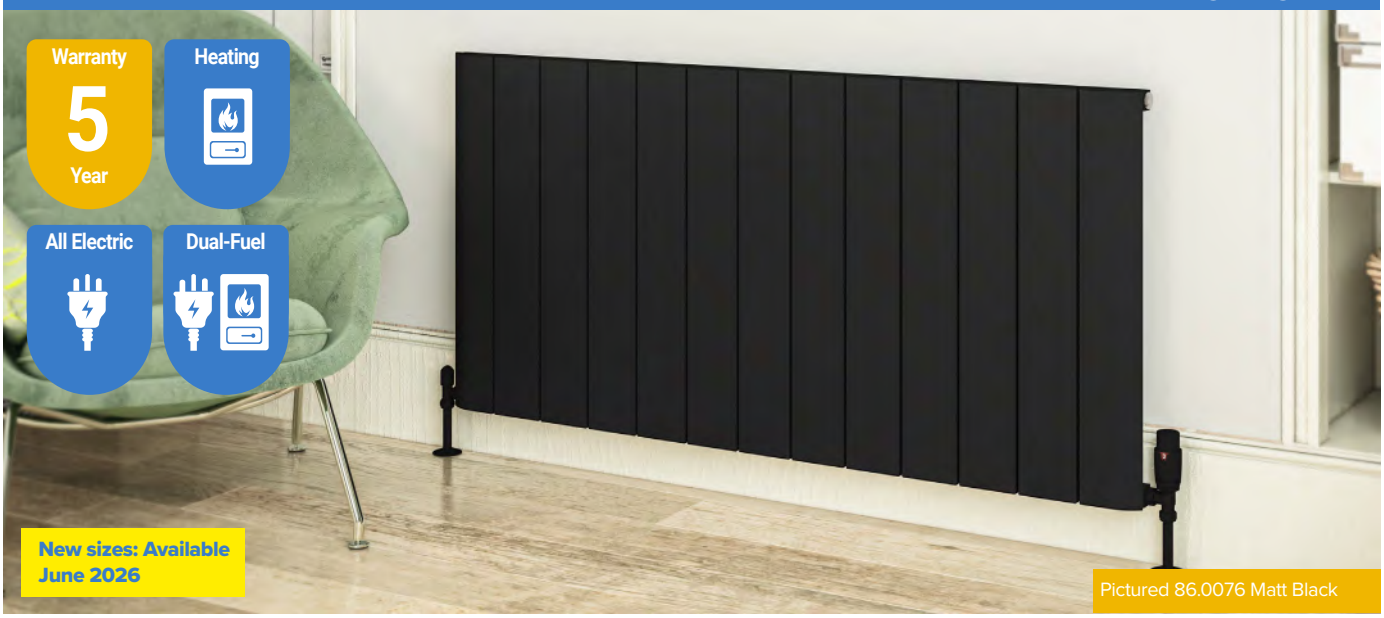

Pictured 86.0076 Matt Black

Peretti Horizontal Aluminium Radiators - Matt White

Size H x W	Delta △T30 Watts	Delta △T30 BTU	Delta △T50 Watts	Delta △T50 BTU	Element Output	Code	£ Ex VAT	£ Inc VAT
600 x 470mm	202	689	400	1364	300W	86.0062	240.00	**288.00**
600 x 660mm	282	962	560	1910	450W	86.0065	319.00	**382.80**
600 x 850mm	363	1238	720	2456	600W	86.0068	397.00	**476.40**
600 x 1040mm	444	1515	880	3001	750W	99.0071	475.00	**570.00**
600 x 1230mm	524	1787	1040	3547	900W	86.0074	553.00	**663.60**
600 x 1420mm	564*	1924*	1125*	3837*	900W	99.0644	629.00	**754.80**
600 x 1610mm	639*	2179*	1276*	4352*	1000W	99.0647	701.00	**841.20**

Peretti Horizontal Aluminium Radiators - Matt Anthracite

Size H x W	Delta △T30 Watts	Delta △T30 BTU	Delta △T50 Watts	Delta △T50 BTU	Element Output	Code	£ Ex VAT	£ Inc VAT
600 x 470mm	202	689	400	1364	300W	99.0063	240.00	**288.00**
600 x 660mm	282	962	560	1910	450W	99.0066	319.00	**382.80**
600 x 850mm	363	1238	720	2456	600W	99.0069	397.00	**476.40**
600 x 1040mm	444	1515	880	3001	750W	86.0072	475.00	**570.00**
600 x 1230mm	524	1787	1040	3547	900W	86.0075	553.00	**663.60**
600 x 1420mm	564*	1924*	1125*	3837*	900W	99.0645	629.00	**754.80**
600 x 1610mm	639*	2179*	1276*	4352*	1000W	99.0648	701.00	**841.20**

Peretti Horizontal Aluminium Radiators - Matt Black

Size H x W	Delta △T30 Watts	Delta △T30 BTU	Delta △T50 Watts	Delta △T50 BTU	Element Output	Code	£ Ex VAT	£ Inc VAT
600 x 470mm	202	689	400	1364	300W	86.0064	240.00	**288.00**
600 x 660mm	282	962	560	1910	450W	99.0067	319.00	**382.80**
600 x 850mm	363	1238	720	2456	600W	99.0070	397.00	**476.40**
600 x 1040mm	444	1515	880	3001	750W	86.0073	475.00	**570.00**
600 x 1230mm	524	1787	1040	3547	900W	86.0076	553.00	**663.60**
600 x 1420mm	564*	1924*	1125*	3837*	900W	99.0646	629.00	**754.80**
600 x 1610mm	639*	2179*	1276*	4352*	1000W	99.0649	701.00	**841.20**

Peretti Horizontal Aluminium Radiators - Polished Aluminium

Size H x W	Delta △T30 Watts	Delta △T30 BTU	Delta △T50 Watts	Delta △T50 BTU	Element Output	Code	£ Ex VAT	£ Inc VAT
600 x 470mm	194	662	379	1293	300W	86.0180	271.00	**325.20**
600 x 660mm	272	928	531	1811	450W	99.0181	358.00	**429.60**
600 x 850mm	349	1191	683	2330	600W	86.0182	446.00	**535.20**
600 x 1040mm	427	1457	835	2848	750W	99.0183	534.00	**640.80**
600 x 1230mm	504	1719	986	3363	900W	99.0184	622.00	**746.40**

Prices include radiator and wall fixing sets, valves and accessories extra.

* Further heat output information available on eastbrooktrade.com **E&OA**

All Peretti models shown above are compatible with Element Type A, A+, C and H

Matt White

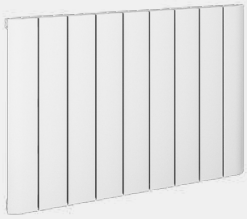

Matt Anthracite

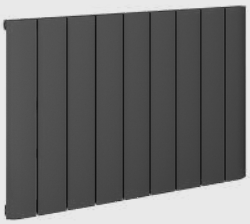

Matt Black

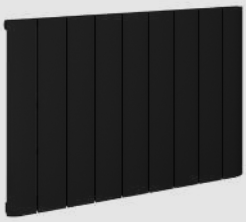

Polished Aluminium

Peretti Cover Cap Sets - Chrome

Description	Code	£ Ex VAT	£ Inc VAT
Cover Cap Set 470mm	86.0127	31.00	**37.20**
Cover Cap Set 660mm	86.0128	40.00	**48.00**
Cover Cap Set 850mm	86.0129	49.00	**58.80**
Cover Cap Set 1040mm	86.0130	58.00	**69.60**
Cover Cap Set 1230mm	86.0131	67.00	**80.40**

Cover cap sets only include cover caps for the top or bottom of the radiator.

• NEW SIZES HERE •

Aluminium Range

PERETTI STANDARD TOWEL HANGERS

Towel Hanger - Matt White

Size	Code	£ Ex VAT	£ Inc VAT
280mm	89.0186	62.00	**74.40**
375mm	89.0187	66.00	**79.20**
470mm	89.0188	74.00	**88.80**
565mm	86.0338	78.00	**93.60**
660mm	101.0186	82.00	**98.40**

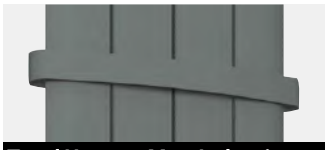

Towel Hanger - Matt Anthracite

Size	Code	£ Ex VAT	£ Inc VAT
280mm	89.0189	62.00	**74.40**
375mm	89.0190	66.00	**79.20**
470mm	89.0191	74.00	**88.80**
565mm	86.0339	78.00	**93.60**
660mm	101.0187	82.00	**98.40**

Towel Hanger - Matt Black

Size	Code	£ Ex VAT	£ Inc VAT
280mm	89.0192	62.00	**74.40**
375mm	89.0193	66.00	**79.20**
470mm	89.0194	74.00	**88.80**
565mm	86.0340	78.00	**93.60**
660mm	101.0188	82.00	**98.40**

Towel Hanger - Chrome

Size	Code	£ Ex VAT	£ Inc VAT
280mm	86.0077	53.00	**63.60**
375mm	86.0078	62.00	**74.40**
470mm	86.0079	69.00	**82.80**
565mm	86.0341	72.00	**86.40**
660mm	101.0189	77.00	**92.40**

TECHNICAL INFORMATION

Material: **Steel (Premium: Stainless Steel - Grade 304)**

1800mm height radiators come with 3 pre-drilled towel hanger locations with a maximum of 3 towel hangers - all widths; 280, 375, 470, 565 and 660mm. and 1200mm height radiators come with 2 pre-drilled towel hanger locations with a max. of 2 towel hangers. 600mm height radiators come with 1 pre-drilled towel hanger location, with a maximum of 1 towel hanger - 280mm width. The Peretti Standard Towel Hangers will add approx 8mm width on each side once fitted to the radiator.

600mm height x 470mm width radiator can have one towel hanger.

Can be fitted after installation only on high adjustment bracket fitting.

Towel Hanger - Brushed Brass

Size	Code	£ Ex VAT	£ Inc VAT
280mm	41.0612	59.00	**70.80**
375mm	41.0613	68.00	**81.60**
470mm	41.0614	77.00	**92.40**
565mm	41.0615	81.00	**97.20**

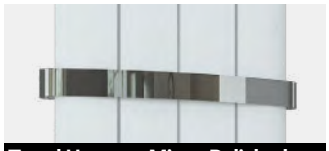

Towel Hanger - Mirror Polished Premium

Size	Code	£ Ex VAT	£ Inc VAT
280mm	86.0201	73.00	**87.60**
375mm	86.0202	80.00	**96.00**
470mm	86.0203	87.00	**104.40**
565mm	86.0342	93.00	**111.60**
660mm	101.0190	98.00	**117.60**

PERETTI FLAT STYLE TOWEL HANGERS

SINGLE FLAT STYLE

Towel Hanger - Matt White

Size	Code	£ Ex VAT	£ Inc VAT
280mm	89.0283	72.00	**86.40**
375mm	89.0284	79.00	**94.80**
470mm	89.0285	89.00	**106.80**
565mm	91.0163	95.00	**114.00**
660mm	89.0286	100.00	**120.00**
850mm	89.0287	112.00	**134.40**

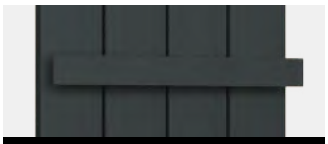

Towel Hanger - Matt Anthracite

Size	Code	£ Ex VAT	£ Inc VAT
280mm	89.0288	72.00	**86.40**
375mm	89.0289	79.00	**94.80**
470mm	89.0290	89.00	**106.80**
565mm	91.0164	95.00	**114.00**
660mm	89.0291	100.00	**120.00**
850mm	89.0292	112.00	**134.40**

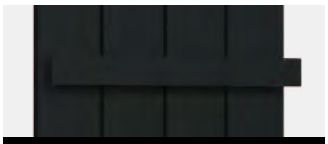

Towel Hanger - Matt Black

Size	Code	£ Ex VAT	£ Inc VAT
280mm	89.0293	72.00	**86.40**
375mm	89.0294	79.00	**94.80**
470mm	89.0295	89.00	**106.80**
565mm	91.0165	95.00	**114.00**
660mm	89.0296	100.00	**120.00**
850mm	89.0297	112.00	**134.40**

Towel Hanger - Chrome

Size	Code	£ Ex VAT	£ Inc VAT
280mm	91.0094	98.00	**117.60**
375mm	91.0095	100.00	**120.00**
470mm	91.0096	102.00	**122.40**
565mm	91.0166	103.00	**123.60**
660mm	91.0097	108.00	**129.60**
850mm	91.0098	115.00	**138.00**

DOUBLE FLAT STYLE

Towel Hanger - Matt White

Size	Code	£ Ex VAT	£ Inc VAT
280mm	89.0369	88.00	**105.60**
375mm	89.0370	92.00	**110.40**
470mm	89.0371	103.00	**123.60**
565mm	91.0167	114.00	**136.80**
660mm	89.0372	121.00	**145.20**
850mm	89.0373	135.00	**162.00**

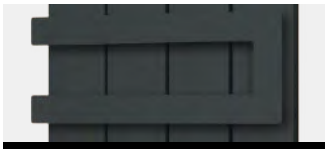

Towel Hanger - Matt Anthracite

Size	Code	£ Ex VAT	£ Inc VAT
280mm	89.0374	88.00	**105.60**
375mm	89.0375	92.00	**110.40**
470mm	89.0376	103.00	**123.60**
565mm	91.0168	114.00	**136.80**
660mm	89.0377	121.00	**145.20**
850mm	89.0378	135.00	**162.00**

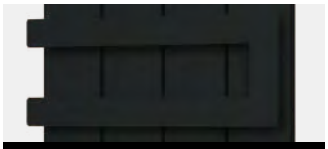

Towel Hanger - Matt Black

Size	Code	£ Ex VAT	£ Inc VAT
280mm	89.0379	88.00	**105.60**
375mm	89.0380	92.00	**110.40**
470mm	89.0381	103.00	**123.60**
565mm	91.0169	114.00	**136.80**
660mm	89.0382	121.00	**145.20**
850mm	89.0383	135.00	**162.00**

Towel Hanger - Chrome

Size	Code	£ Ex VAT	£ Inc VAT
280mm	91.0114	124.00	**148.80**
375mm	91.0115	130.00	**156.00**
470mm	91.0116	132.00	**158.40**
565mm	91.0170	138.00	**165.60**
660mm	91.0117	142.00	**170.40**
850mm	91.0118	154.00	**184.80**

TECHNICAL INFORMATION

Material: **Steel**

Vertical and Horizontal Radiators:

Flat & Double Flat Style Hangers are compatible with both Vertical and Horizontal radiators.(Depending on the radiators and hangers width)

Must be fitted before installation!

Hanger Fitting Widths
96/191/286/381/476/666mm

Hanger Fitting Widths
96/191/286/381/476/666mm

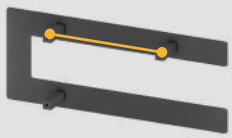

Aluminium Range

PERETTI FLAT TRIPLE TOWEL HANGER

Brushed Stainless Steel

Polished Stainless Steel

Flat Triple Hanger - Brushed Stainless Steel

Size	Code	£ Ex VAT	£ Inc VAT
280mm	101.0048	240.00	**288.00**
375mm	101.0049	261.00	**313.20**
470mm	101.0050	299.00	**358.80**
565mm	101.0064	335.00	**402.00**

Flat Triple Hanger - Polished Stainless Steel

Size	Code	£ Ex VAT	£ Inc VAT
280mm	101.0054	240.00	**288.00**
375mm	101.0055	261.00	**313.20**
470mm	101.0056	299.00	**358.80**
565mm	101.0065	335.00	**402.00**

PERETTI CURVED TRIPLE TOWEL HANGER

Brushed Stainless Steel

Polished Stainless Steel

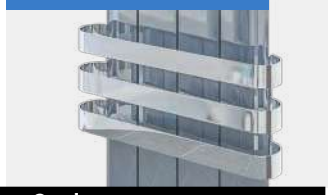

Curved Triple Hanger - Brushed Stainless Steel

Size	Code	£ Ex VAT	£ Inc VAT
280mm	101.0051	240.00	**288.00**
375mm	101.0052	261.00	**313.20**
470mm	101.0053	299.00	**358.80**
565mm	101.0066	335.00	**402.00**

Curved Triple Hanger - Polished Stainless Steel

Size	Code	£ Ex VAT	£ Inc VAT
280mm	101.0057	240.00	**288.00**
375mm	101.0058	261.00	**313.20**
470mm	101.0059	299.00	**358.80**
565mm	101.0067	335.00	**402.00**

TECHNICAL INFORMATION

Material: **Stainless Steel - Grade 304**

Vertical Radiators:

1800mm height radiators comes with 3 pre-drilled towel hanger locations. 600mm height radiators come with 1 pre-drilled towel hanger location. The flat triple & curved triple towel hangers are only compatible with the Vertical Radiators and can be fitted to the pre-drilled holes on 1800mm & 600mm height radiators. **Can be fitted after installation only on high adjustment bracket fitting.**

Horizontal Radiators:

The flat triple & curved triple towel hangers are not suitable for horizontal radiators.

PERETTI DESIGNER TOWEL HANGERS

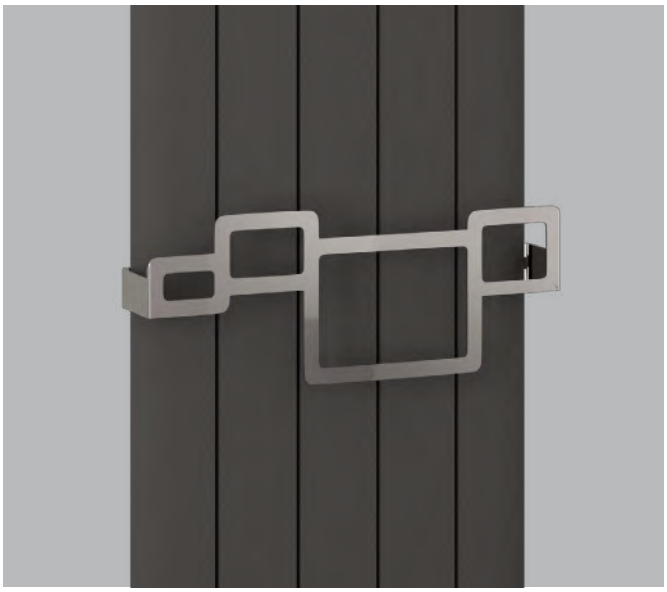

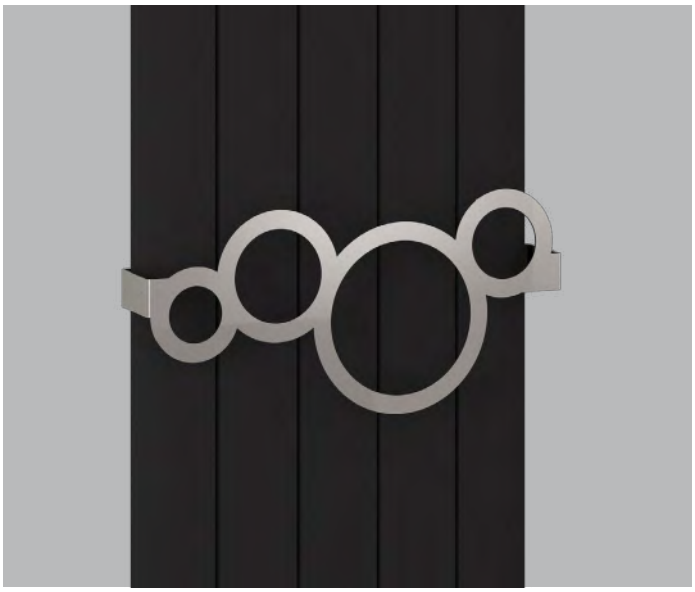

Square Style

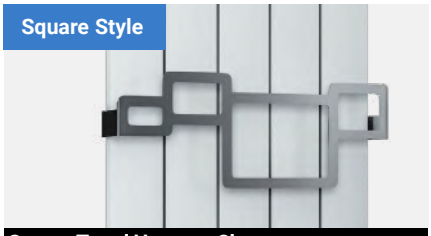

Square Towel Hanger - Chrome

Size	Code	£ Ex VAT	£ Inc VAT
375mm	101.0084	83.00	**99.60**
470mm	101.0085	96.00	**115.20**
565mm	101.0086	112.00	**134.40**

Circle Style

Circle Towel Hanger - Chrome

Size	Code	£ Ex VAT	£ Inc VAT
375mm	101.0108	84.00	**100.80**
470mm	101.0109	98.00	**117.60**
565mm	101.0110	116.00	**139.20**

TECHNICAL INFORMATION

Material: **Steel**

Square, Triangle and Circle Towel Hangers are only compatible with vertical radiators and can be fitted to one of the three pre-drilled holes on the 1800mm height radiators and to one of the two pre-drilled holes of the 1200mm height radiators. Square, Triangle and Circle Towel Hangers will add approx 8mm width on each side once fitted to the radiator. **Can be fitted after installation only on high adjustment bracket fitting.**

Aluminium Range

KINGSWOOD SLIMLINE - VERTICAL

Warranty 5 Year

Heating

Pictured 86.0528 Matt Anthracite

Presenting the Kingswood Slimline, an aluminium radiator crafted with sleek vertical profiles that resemble a designer masterpiece. Exceptional craftsmanship and superior design allow us to offer this radiator in three exquisite colours.

FEATURES for Vertical & Horizontal Sizes
- Excellent heat conductivity and lightweight
- Only requires a low water volume
- Heats up very quickly
- Available in three colours
- Rear grilles for increased heat output
- Not suitable for elements
- Tested to BS EN 442 standards
- 5 Year Manufacturer's Warranty*

* With conditions

Technical Tables & Drawings
Page 406-407

Guardia Towel Hangers

Can be used with Kingswood Slimline Vertical radiators.

Refer to Page 253

Pictured 86.0523 Matt White, with 86.0227 Guardia Towel Hanger

Kingswood Slimline Vertical Aluminium Radiators - Matt White

Size H x W	Delta △T30		Delta △T50		Code	£ Ex VAT	£ Inc VAT
	Watts	BTU	Watts	BTU			
1800 x 310mm	367	1252	760	2592	86.0522	277.00	**332.40**
1800 x 410mm	458	1562	951	3243	86.0523	350.00	**420.00**
1800 x 510mm	550	1876	1141	3891	86.0524	425.00	**510.00**
1800 x 610mm	733	2500	1521	5187	86.0525	498.00	**597.60**

Kingswood Slimline Vertical Aluminium Radiators - Matt Anthracite

Size H x W	Delta △T30		Delta △T50		Code	£ Ex VAT	£ Inc VAT
	Watts	BTU	Watts	BTU			
1800 x 310mm	367	1252	760	2592	86.0526	277.00	**332.40**
1800 x 410mm	458	1562	951	3243	86.0527	350.00	**420.00**
1800 x 510mm	550	1876	1141	3891	86.0528	425.00	**510.00**
1800 x 610mm	733	2500	1521	5187	86.0529	498.00	**597.60**

Kingswood Slimline Vertical Aluminium Radiators - Matt Black

Size H x W	Delta △T30		Delta △T50		Code	£ Ex VAT	£ Inc VAT
	Watts	BTU	Watts	BTU			
1800 x 310mm	367	1252	760	2592	86.0530	277.00	**332.40**
1800 x 410mm	458	1562	951	3243	86.0531	350.00	**420.00**
1800 x 510mm	550	1876	1141	3891	86.0532	425.00	**510.00**
1800 x 610mm	733	2500	1521	5187	86.0533	498.00	**597.60**

Prices include radiator and wall fixing sets, valves and accessories extra.

TECHNICAL INFORMATION for Vertical & Horizontal Sizes

All measurements in Height by Width. Not suitable for elements. For matching valves see pages 338-353. Corrosion inhibitor must be added to the heating system and maintained. Flow diverter must be fitted in the bottom header as shown in the instructions. For indirect heating systems only. Tappings are the width of the rail and 50 or 70mm off the wall. Projection from wall is 70 or 90mm.

Aluminium Range

KINGSWOOD SLIMLINE - HORIZONTAL

Warranty 5 Year

Heating

Pictured 86.0540 Matt White

Technical Tables & Drawings
Page 406-407

Kingswood Slimline Horizontal Aluminium Radiators - Matt White

Size H x W	Delta △T30 Watts	Delta △T30 BTU	Delta △T50 Watts	Delta △T50 BTU	Code	£ Ex VAT	£ Inc VAT
600 x 410mm	170	580	334	1139	86.0534	165.00	**198.00**
600 x 510mm	213	727	418	1426	86.0535	195.00	**234.00**
600 x 610mm	255	870	502	1712	86.0536	226.00	**271.20**
600 x 810mm	340	1160	669	2282	86.0537	289.00	**346.80**
600 x 1010mm	425	1450	836	2851	86.0538	352.00	**422.40**
600 x 1210mm	510	1740	1003	3421	86.0539	416.00	**499.20**
600 x 1410mm	595	2029	1170	3990	86.0540	465.00	**558.00**

Kingswood Slimline Horizontal Aluminium Radiators - Matt Anthracite

Size H x W	Delta △T30 Watts	Delta △T30 BTU	Delta △T50 Watts	Delta △T50 BTU	Code	£ Ex VAT	£ Inc VAT
600 x 410mm	170	580	334	1139	86.0541	165.00	**198.00**
600 x 510mm	213	727	418	1426	86.0542	195.00	**234.00**
600 x 610mm	255	870	502	1712	86.0543	226.00	**271.20**
600 x 810mm	340	1160	669	2282	86.0544	289.00	**346.80**
600 x 1010mm	425	1450	836	2851	86.0545	352.00	**422.40**
600 x 1210mm	510	1740	1003	3421	86.0546	416.00	**499.20**
600 x 1410mm	595	2029	1170	3990	86.0547	465.00	**558.00**

Kingswood Slimline Vertical Aluminium Radiators - Matt Black

Size H x W	Delta △T30 Watts	Delta △T30 BTU	Delta △T50 Watts	Delta △T50 BTU	Code	£ Ex VAT	£ Inc VAT
600 x 410mm	170	580	334	1139	86.0548	165.00	**198.00**
600 x 510mm	213	727	418	1426	86.0549	195.00	**234.00**
600 x 610mm	255	870	502	1712	86.0550	226.00	**271.20**
600 x 810mm	340	1160	669	2282	86.0551	289.00	**346.80**
600 x 1010mm	425	1450	836	2851	86.0552	352.00	**422.40**
600 x 1210mm	510	1740	1003	3421	86.0553	416.00	**499.20**
600 x 1410mm	595	2029	1170	3990	86.0554	465.00	**558.00**

Prices include radiator and wall fixing sets, valves and accessories extra.

Matt White

Matt Anthracite

Matt Black

Rear grilles for increased heat output

Aluminium Range

KINGSWOOD SLIMLINE - TOWEL RAIL

Pictured 86.0569 Matt Black

Introducing the Kingswood Slimline Towel Rail – an aluminium towel rail masterpiece with sleek horizontal profiles that exude designer elegance. Meticulously crafted with exceptional precision, this towel rail is available in three stunning colours to complement any modern bathroom.

FEATURES

- Excellent heat conductivity and lightweight
- Only requires a low water volume
- Heats up very quickly
- Available in three colours
- Tested to BS EN 442 standards
- Can be single or dual fuel, or all electric
- 5 Year Manufacturer's Warranty*

* With conditions

Technical Tables & Drawings
Page 406-407

Pictured 86.0565 Matt Anthracite

TECHNICAL INFORMATION

All measurements in Height by Width.

For element types see pages 324-337. For matching valves see pages 338-353. For indirect heating systems only. Tappings are approx. 29mm less than the width of the rail and approx. 90-110mm off the wall. Projection from wall is 108-128mm. Price includes radiator and wall fixing sets, valves extra.

Aluminium Range

KINGSWOOD SLIMLINE - TOWEL RAIL

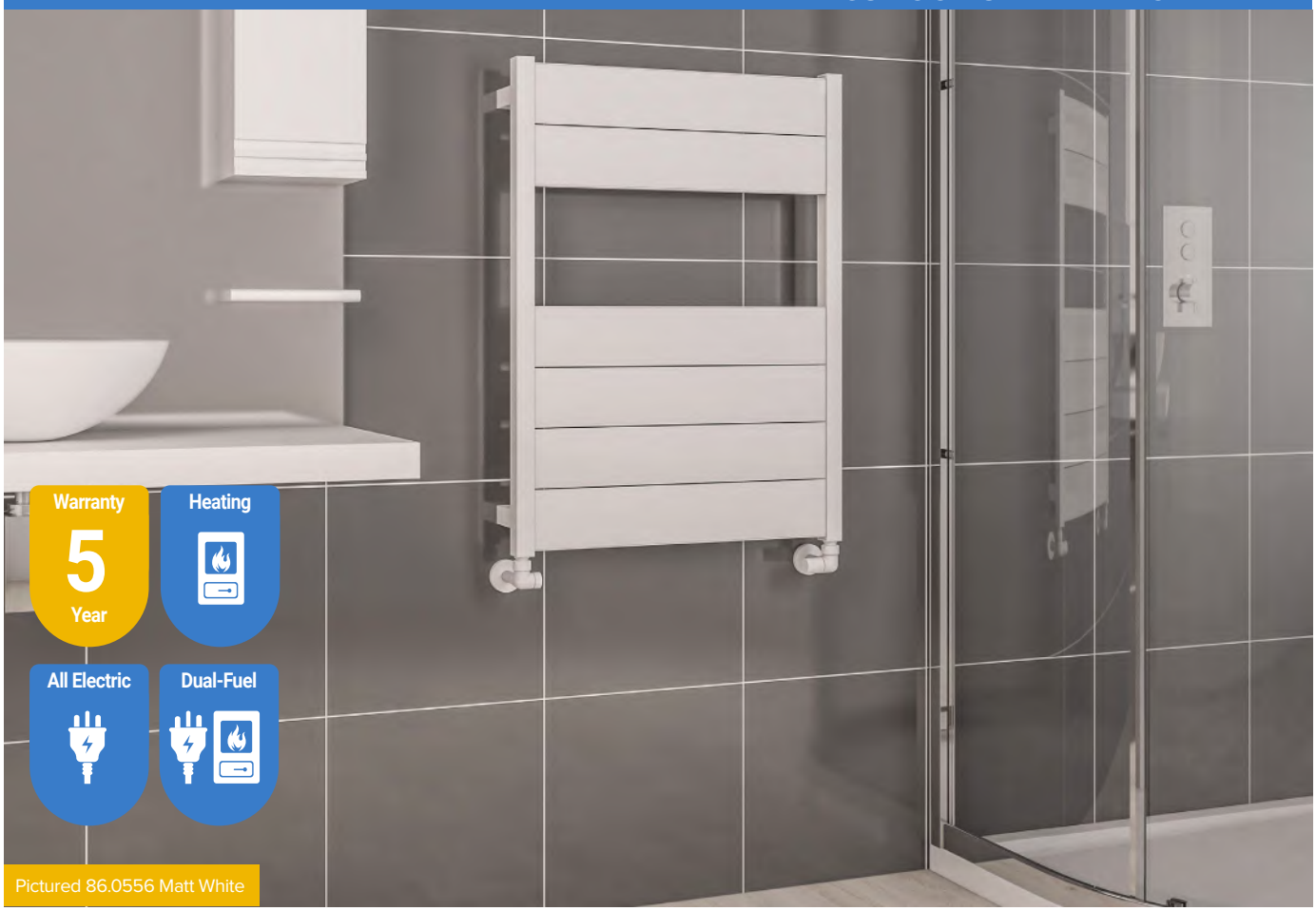

Pictured 86.0556 Matt White

Kingswood Slimline Aluminium Towel Rails - Matt White

Size H x W	Delta △T30 Watts	Delta △T30 BTU	Delta △T50 Watts	Delta △T50 BTU	Element Output	Code	£ Ex VAT	£ Inc VAT
820 x 500mm	188	642	351	1197	150W	86.0555	236.00	**283.20**
820 x 600mm	215	734	404	1378	150W	86.0556	257.00	**308.40**
1220 x 500mm	259	884	492	1678	300W	86.0557	312.00	**374.40**
1220 x 600mm	294	1003	563	1920	300W	86.0558	339.00	**406.80**
1820 x 500mm	386	1317	734	2503	600W	86.0559	443.00	**531.60**
1820 x 600mm	434	1480	827	2821	750W	86.0560	483.00	**579.60**

Kingswood Slimline Aluminium Towel Rails - Matt Anthracite

Size H x W	Delta △T30 Watts	Delta △T30 BTU	Delta △T50 Watts	Delta △T50 BTU	Element Output	Code	£ Ex VAT	£ Inc VAT
820 x 500mm	188	642	351	1197	150W	86.0561	236.00	**283.20**
820 x 600mm	215	734	404	1378	150W	86.0562	257.00	**308.40**
1220 x 500mm	259	884	492	1678	300W	86.0563	312.00	**374.40**
1220 x 600mm	294	1003	563	1920	300W	86.0564	339.00	**406.80**
1820 x 500mm	386	1317	734	2503	600W	86.0565	443.00	**531.60**
1820 x 600mm	434	1480	827	2821	750W	86.0566	483.00	**579.60**

Kingswood Slimline Aluminium Towel Rails - Matt Black

Size H x W	Delta △T30 Watts	Delta △T30 BTU	Delta △T50 Watts	Delta △T50 BTU	Element Output	Code	£ Ex VAT	£ Inc VAT
820 x 500mm	188	642	351	1197	150W	86.0567	236.00	**283.20**
820 x 600mm	215	734	404	1378	150W	86.0568	257.00	**308.40**
1220 x 500mm	259	884	492	1678	300W	86.0569	312.00	**374.40**
1220 x 600mm	294	1003	563	1920	300W	86.0570	339.00	**406.80**
1820 x 500mm	386	1317	734	2503	600W	86.0571	443.00	**531.60**
1820 x 600mm	434	1480	827	2821	750W	86.0572	483.00	**579.60**

All Kingswood Towel Rail models shown above are compatible with Element Type A, A+

Matt White

Matt Anthracite

Matt Black

Radiator Valves
Page 338-353

Aluminium Range

QUEENSWOOD VERTICAL

Pictured 81.0264 Matt White with 86.0347 Towel Hanger

Pictured 81.0286 Matt Black

Guardia Towel Hangers

Can be used with Queenswood Vertical radiators.

Refer to Page 253

Featuring a sophisticated vertical double-profile design, this radiator exudes elegance and modern appeal. Perfectly crafted for both style and functionality, Queenswood seamlessly enhances any space with its refined aesthetic. Vertical & horizontal sizes available in three colours.

FEATURES

- Excellent heat conductivity and lightweight
- Only requires a low water volume
- Heats up very quickly
- Radiators come with cover caps on top and bottom, same as radiator colour
- Comes with built-in flow diverter
- Tested to BS EN 442 standards
- 5 Year Manufacturer's Warranty*
- Not suitable for elements

* With conditions

Queenswood Vertical Aluminium Radiators - Matt White

Size H x W	Delta △T30		Delta △T50		Code	£ Ex VAT	£ Inc VAT
	Watts	BTU	Watts	BTU			
1800 x 291mm	429	1463	867	2957	81.0261	320.00	**384.00**
1800 x 388mm	572	1951	1156	3942	81.0262	416.00	**499.20**
1800 x 485mm	715	2439	1446	4931	81.0263	501.00	**601.20**
1800 x 582mm	858	2926	1735	5917	81.0264	621.00	**745.20**

Queenswood Vertical Aluminium Radiators - Matt Anthracite

Size H x W	Delta △T30		Delta △T50		Code	£ Ex VAT	£ Inc VAT
	Watts	BTU	Watts	BTU			
1800 x 291mm	429	1463	867	2957	81.0273	320.00	**384.00**
1800 x 388mm	572	1951	1156	3942	81.0274	416.00	**499.20**
1800 x 485mm	715	2439	1446	4931	81.0275	501.00	**601.20**
1800 x 582mm	858	2926	1735	5917	81.0276	621.00	**745.20**

Queenswood Vertical Aluminium Radiators - Matt Black

Size H x W	Delta △T30		Delta △T50		Code	£ Ex VAT	£ Inc VAT
	Watts	BTU	Watts	BTU			
1800 x 291mm	429	1463	867	2957	81.0285	320.00	**384.00**
1800 x 388mm	572	1951	1156	3942	81.0286	416.00	**499.20**
1800 x 485mm	715	2439	1446	4931	81.0287	501.00	**601.20**
1800 x 582mm	858	2926	1735	5917	81.0288	621.00	**745.20**

Prices include radiator and wall fixing sets, valves and accessories extra.

Aluminium Range

QUEENSWOOD VERTICAL

Technical Tables & Drawings
Page 406-407

Warranty
5
Year

Heating

Guardia Towel Hangers

Can be used with Queenswood Vertical radiators.

Refer to Page 253

Pictured 81.0275 Matt Anthracite

Double profile construction

TECHNICAL INFORMATION

All measurements in Height by Width. Not suitable for elements. For matching valves see pages 338-353. Corrosion inhibitor must be added to the heating system and maintained. Comes with pre-fitted flow diverter, fitted in the middle of the bottom header. For indirect heating systems only. Tappings are the width of the rail and approx 59mm off the wall. Projection from wall is 93mm.

Matt White

Matt Anthracite

Matt Black

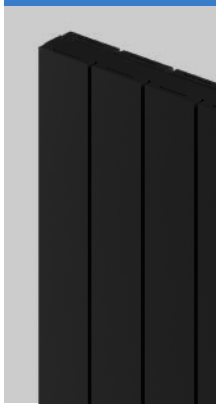

Aluminium Range

QUEENSWOOD HORIZONTAL

Pictured 81.0269 Matt White

Technical Tables & Drawings
Page 406-407

Featuring a sophisticated vertical double-profile design, this radiator exudes elegance and modern appeal. Perfectly crafted for both style and functionality, Queenswood seamlessly enhances any space with its refined aesthetic. Vertical & horizontal sizes available in three colours.

FEATURES

- Excellent heat conductivity and lightweight
- Only requires a low water volume
- Heats up very quickly
- Radiators come with cover caps on top and bottom, same as radiator colour
- Does not come with flow diverter
- Tested to BS EN 442 standards
- 5 Year Manufacturer's Warranty*
- Can be single or dual fuel, or all electric

* With conditions

Queenswood Horizontal Aluminium Radiators - Matt White

Size H x W	Delta △T30		Delta △T50		Element Output	Code	£ Ex VAT	£ Inc VAT
	Watts	BTU	Watts	BTU				
600 x 485mm	292	996	582	1985	450W	81.0265	265.00	**318.00**
600 x 582mm	351	1197	699	2384	450W	81.0266	310.00	**372.00**
600 x 679mm	409	1395	815	2780	600W	81.0267	346.00	**415.20**
600 x 873mm	526	1794	1048	3574	900W	81.0268	435.00	**522.00**
600 x 1067mm	643	2193	1281	4369	900W	81.0269	515.00	**618.00**
600 x 1261mm	760	2592	1513	5160	1200W	81.0270	607.00	**728.40**
600 x 1455mm	877	2991	1746	5954	1200W	81.0271	711.00	**853.20**
600 x 1649mm	993	3387	1979	6749	1200W	81.0272	803.00	**963.60**

Prices include radiator and wall fixing sets, valves and accessories extra.

All Queenswood models shown above are compatible with Element Type A, A+ (except 600x679, 600x873 & 600x1067mm sizes Type A+)

Aluminium Range

QUEENSWOOD HORIZONTAL

Pictured 81.0283 Matt Anthracite

Pictured 81.0292 Matt Black

Queenswood Horizontal Aluminium Radiators - Matt Anthracite

Size H x W	Delta △T30		Delta △T50		Element Output	Code	£ Ex VAT	£ Inc VAT
	Watts	BTU	Watts	BTU				
600 x 485mm	292	996	582	1985	450W	81.0277	265.00	**318.00**
600 x 582mm	351	1197	699	2384	450W	81.0278	310.00	**372.00**
600 x 679mm	409	1395	815	2780	600W	81.0279	346.00	**415.20**
600 x 873mm	526	1794	1048	3574	900W	81.0280	435.00	**522.00**
600 x 1067mm	643	2193	1281	4369	900W	81.0281	515.00	**618.00**
600 x 1261mm	760	2592	1513	5160	1200W	81.0282	607.00	**728.40**
600 x 1455mm	877	2991	1746	5954	1200W	81.0283	711.00	**853.20**
600 x 1649mm	993	3387	1979	6749	1200W	81.0284	803.00	**963.60**

Prices include radiator and wall fixing sets, valves and accessories extra.

Queenswood Horizontal Aluminium Radiators - Matt Black

Size H x W	Delta △T30		Delta △T50		Element Output	Code	£ Ex VAT	£ Inc VAT
	Watts	BTU	Watts	BTU				
600 x 485mm	292	996	582	1985	450W	81.0289	265.00	**318.00**
600 x 582mm	351	1197	699	2384	450W	81.0290	310.00	**372.00**
600 x 679mm	409	1395	815	2780	600W	81.0291	346.00	**415.20**
600 x 873mm	526	1794	1048	3574	900W	81.0292	435.00	**522.00**
600 x 1067mm	643	2193	1281	4369	900W	81.0293	515.00	**618.00**
600 x 1261mm	760	2592	1513	5160	1200W	81.0294	607.00	**728.40**
600 x 1455mm	877	2991	1746	5954	1200W	81.0295	711.00	**853.20**
600 x 1649mm	993	3387	1979	6749	1200W	81.0296	803.00	**963.60**

Prices include radiator and wall fixing sets, valves and accessories extra.

All Queenswood models shown above are compatible with Element Type A, A+ (except 600x679, 600x873 & 600x1067mm sizes Type A+)

Double profile construction

Matt White

Matt Anthracite

Matt Black

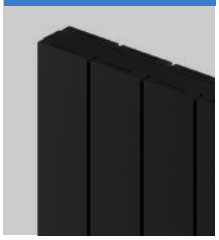

TECHNICAL INFORMATION

All measurements in Height by Width. For matching valves see pages 338-353. Corrosion inhibitor must be added to the heating system and maintained. For indirect heating systems only. Tappings are the width of the rail and approx 59mm off the wall. Projection from wall is 93mm.

For element types see pages 324-337.

Element can only be installed horizontally on the bottom header. Radiators that are electric only are restricted to the heat output of the elements.

Aluminium Range

MERSEY VERTICAL

Pictured 41.0450 Matt White with 41.0465 Towel Hangers

Brushed Brass colour setup

Pictured 41.0457 Matt Anthracite with 41.0472 Towel Hanger and 41.0722 Cover Caps x 2

Mersey Aluminium Radiators with ridged front panels will stand out in every room, with adding from a choice of towel hangers, your bathroom can also be heated while drying your towels. Available only in vertical sizes and 3 colours options.

Warranty 5 Year

Heating

Bleed Valve & Blanking Plug Set - Brushed Brass

Code	£ Ex VAT	£ Inc VAT
41.0732	11.00	**13.20**

FEATURES

- Excellent heat conductivity and lightweight
- Only requires a low water volume
- Heats up very quickly
- Radiators come with chrome cover caps on top and bottom
- Not suitable for elements
- Tested to BS EN 442 standards
- 5 Year Manufacturer's Warranty*

* With conditions

Technical Tables & Drawings
Page 408-409

TECHNICAL INFORMATION

All measurements in Height by Width. Not suitable for elements. For matching valves see pages 338-353. Corrosion inhibitor must be added to the heating system and maintained. Comes with pre-fitted flow diverter, fitted in the middle of the bottom header. For indirect heating systems only. Tappings are the width of the rail and 38mm off the wall. Projection from wall is 76mm.

Aluminium Range

MERSEY VERTICAL

Mersey Vertical Aluminium Radiators - Matt White

Size H x W	Delta △T30		Delta △T50		Code	£ Ex VAT	£ Inc VAT
	Watts	BTU	Watts	BTU			
1800 x 280mm	314	1071	612	2087	41.0449	236.00	**283.20**
1800 x 375mm	418	1426	816	2783	41.0450	289.00	**346.80**
1800 x 470mm	523	1784	1019	3475	41.0451	344.00	**412.80**
1800 x 565mm	627	2139	1223	4171	41.0452	398.00	**477.60**
1800 x 660mm	732	2497	1427	4867	41.0453	439.00	**526.80**

Mersey Vertical Aluminium Radiators - Matt Anthracite

Size H x W	Delta △T30		Delta △T50		Code	£ Ex VAT	£ Inc VAT
	Watts	BTU	Watts	BTU			
1800 x 280mm	314	1071	612	2087	41.0454	236.00	**283.20**
1800 x 375mm	418	1426	816	2783	41.0455	289.00	**346.80**
1800 x 470mm	523	1784	1019	3475	41.0456	344.00	**412.80**
1800 x 565mm	627	2139	1223	4171	41.0457	398.00	**477.60**
1800 x 660mm	732	2497	1427	4867	41.0458	439.00	**526.80**

Mersey Vertical Aluminium Radiators - Matt Black

Size H x W	Delta △T30		Delta △T50		Code	£ Ex VAT	£ Inc VAT
	Watts	BTU	Watts	BTU			
1800 x 280mm	314	1071	612	2087	41.0459	236.00	**283.20**
1800 x 375mm	418	1426	816	2783	41.0460	289.00	**346.80**
1800 x 470mm	523	1784	1019	3475	41.0461	344.00	**412.80**
1800 x 565mm	627	2139	1223	4171	41.0462	398.00	**477.60**
1800 x 660mm	732	2497	1427	4867	41.0463	439.00	**526.80**

Prices include radiator and wall fixing sets, valves and accessories extra.

Pictured 41.0461 Matt Black

Mersey Cover Cap Sets - Brass Effect

Description	Code	£ Ex VAT	£ Inc VAT
Cover Cap Set 280mm	41.0719	9.00	**10.80**
Cover Cap Set 375mm	41.0720	11.00	**13.20**
Cover Cap Set 470mm	41.0721	13.00	**15.60**
Cover Cap Set 565mm	41.0722	16.00	**19.20**
Cover Cap Set 660mm	41.0723	18.00	**21.60**

Cover cap sets only include cover caps for the top or bottom of the radiator.

Towel Hanger - Mirror Polished Premium

Description	Code	£ Ex VAT	£ Inc VAT
Towel Hanger 280mm	41.0464	53.00	**63.60**
Towel Hanger 375mm	41.0465	58.00	**69.60**
Towel Hanger 470mm	41.0466	63.00	**75.60**
Towel Hanger 565mm	41.0467	69.00	**82.80**
Towel Hanger 660mm	41.0468	74.00	**88.80**

Must be fitted before installation!

Towel Hanger - Brushed Brass

Description	Code	£ Ex VAT	£ Inc VAT
Towel Hanger 280mm	41.0469	53.00	**63.60**
Towel Hanger 375mm	41.0470	55.00	**66.00**
Towel Hanger 470mm	41.0471	58.00	**69.60**
Towel Hanger 565mm	41.0472	62.00	**74.40**
Towel Hanger 660mm	41.0473	66.00	**79.20**

Must be fitted before installation!

Aluminium Range

TRENT VERTICAL

Pictured 41.0476 Matt White with 41.0466 Towel Hangers

Pictured 41.0482 Matt Anthracite

Trent Aluminium Radiators with ridged front panels and curved flat end panels will stand out in every room, with adding from a choice of towel hangers, your bathroom can also be heated while drying your towels. Available only in vertical sizes and 3 colours options.

FEATURES

- Excellent heat conductivity and lightweight
- Only requires a low water volume
- Heats up very quickly
- Radiators come with chrome cover caps on top and bottom
- Not suitable for elements
- Tested to BS EN 442 standards
- 5 Year Manufacturer's Warranty*

* With conditions

Warranty 5 Year

Heating

Technical Tables & Drawings
Page 408-409

TECHNICAL INFORMATION

All measurements in Height by Width. Not suitable for elements.For matching valves see pages 338-353. Corrosion inhibitor must be added to the heating system and maintained. Comes with pre-fitted flow diverter, fitted in the middle of the bottom header. For indirect heating systems only. Tappings are the width of the rail and 38mm off the wall. Projection from wall is 76mm.

Aluminium Range

TRENT VERTICAL

Trent Vertical Aluminium Radiators - Matt White

Size H x W	Delta △T30		Delta △T50		Code	£ Ex VAT	£ Inc VAT
	Watts	BTU	Watts	BTU			
1800 x 280mm	301	1027	597	2036	41.0474	220.00	**264.00**
1800 x 375mm	401	1368	796	2715	41.0475	273.00	**327.60**
1800 x 470mm	501	1709	995	3393	41.0476	329.00	**394.80**
1800 x 565mm	602	2053	1194	4072	41.0477	383.00	**459.60**
1800 x 660mm	702	2394	1393	4751	41.0478	426.00	**511.20**

Trent Vertical Aluminium Radiators - Matt Anthracite

Size H x W	Delta △T30		Delta △T50		Code	£ Ex VAT	£ Inc VAT
	Watts	BTU	Watts	BTU			
1800 x 280mm	301	1027	597	2036	41.0479	220.00	**264.00**
1800 x 375mm	401	1368	796	2715	41.0480	273.00	**327.60**
1800 x 470mm	501	1709	995	3393	41.0481	329.00	**394.80**
1800 x 565mm	602	2053	1194	4072	41.0482	383.00	**459.60**
1800 x 660mm	702	2394	1393	4751	41.0483	426.00	**511.20**

Trent Vertical Aluminium Radiators - Matt Black

Size H x W	Delta △T30		Delta △T50		Code	£ Ex VAT	£ Inc VAT
	Watts	BTU	Watts	BTU			
1800 x 280mm	301	1027	597	2036	41.0484	220.00	**264.00**
1800 x 375mm	401	1368	796	2715	41.0485	273.00	**327.60**
1800 x 470mm	501	1709	995	3393	41.0486	329.00	**394.80**
1800 x 565mm	602	2053	1194	4072	41.0487	383.00	**459.60**
1800 x 660mm	702	2394	1393	4751	41.0488	426.00	**511.20**

Prices include radiator and wall fixing sets, valves and accessories extra.

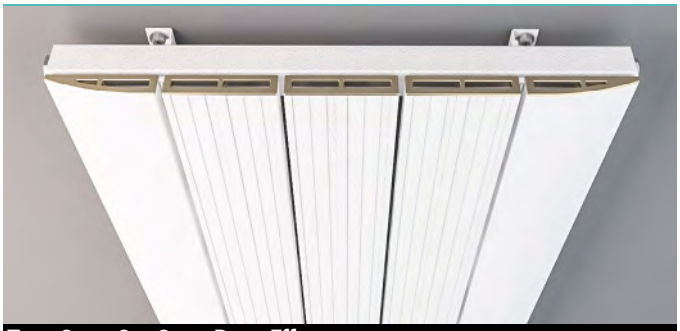

Trent Cover Cap Sets - Brass Effect

Description	Code	£ Ex VAT	£ Inc VAT
Cover Cap Set 280mm	41.0724	9.00	**10.80**
Cover Cap Set 375mm	41.0725	11.00	**13.20**
Cover Cap Set 470mm	41.0726	13.00	**15.60**
Cover Cap Set 565mm	41.0727	15.00	**18.00**
Cover Cap Set 660mm	41.0728	18.00	**21.60**

Cover cap sets only include cover caps for the top or bottom of the radiator.

Bleed Valve & Blanking Plug Set - Brushed Brass

Code	£ Ex VAT	£ Inc VAT
41.0732	11.00	**13.20**

Pictured 41.0485 Matt Black with 41.0470 Towel Hangers and 41.0725 Cover Caps x 2

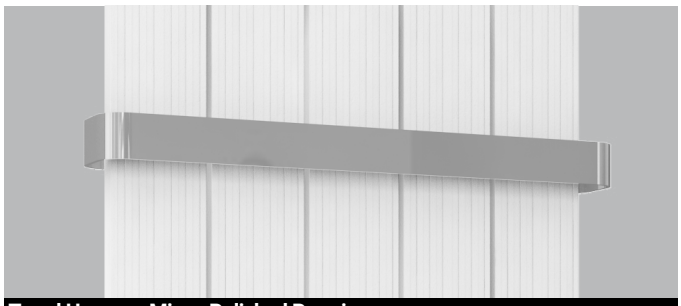

Towel Hanger - Mirror Polished Premium

Description	Code	£ Ex VAT	£ Inc VAT
Towel Hanger 280mm	41.0464	53.00	**63.60**
Towel Hanger 375mm	41.0465	58.00	**69.60**
Towel Hanger 470mm	41.0466	63.00	**75.60**
Towel Hanger 565mm	41.0467	69.00	**82.80**
Towel Hanger 660mm	41.0468	74.00	**88.80**

Must be fitted before installation!

Towel Hanger - Brushed Brass

Description	Code	£ Ex VAT	£ Inc VAT
Towel Hanger 280mm	41.0469	53.00	**63.60**
Towel Hanger 375mm	41.0470	55.00	**66.00**
Towel Hanger 470mm	41.0471	58.00	**69.60**
Towel Hanger 565mm	41.0472	62.00	**74.40**
Towel Hanger 660mm	41.0473	66.00	**79.20**

Must be fitted before installation!

Aluminium Range

ADDINGTON ALUMINIUM TYPE 10 - GLOSS WHITE

Pictured 86.0372 Gloss White with 91.0113 Towel Hanger

Towel Hangers
Page 164-165

Pictured 86.0360 Gloss White with 91.0082 Towel Hanger

Single profile construction

Warranty 5 Year

Heating

All Electric

Dual-Fuel

Pictured 86.0358 Gloss White

Bar Dimensions (mm)

Vertical Bars 70 x 11mm

Aluminium Range

ADDINGTON ALUMINIUM TYPE 10 - GLOSS WHITE

A luxurious flat panelled radiator range with stunning clean lines which will be the focus of any room is now available also in aluminium. Available in horizontal or vertical sizes and different heights. Stunning towel hangers will complement the vertical design allowing room for your towels.

FEATURES

- Excellent heat conductivity and lightweight
- Only requires a low water volume
- Heats up very quickly
- Tested to BS EN 442 standards
- 5 Year Manufacturer's Warranty*
- Can be single or dual fuel, or all electric
- Radiators come with cover caps on top and bottom, the same colour as the radiator

* With conditions

Technical Tables & Drawings
Page 408-409

TECHNICAL INFORMATION

All measurements in Height by Width. For matching valves see pages 338-353. Corrosion inhibitor must be added to the heating system and maintained. Flow diverter must only be fitted when radiator installed on central heating system. For indirect heating systems only. Tappings are the width of the rail and 45mm off the wall. Price includes radiator and wall fixing sets, valves extra.

500mm Height

Addington Aluminium Type 10 Radiators - Gloss White

Size H x W	Delta △T30 Watts	Delta △T30 BTU	Delta △T50 Watts	Delta △T50 BTU	Element Output	Code	£ Ex VAT	£ Inc VAT
500 x 514mm	171	584	338	1153	150W	86.0348	237.00	**284.40**
500 x 588mm	195	665	387	1320	150W	86.0349	261.00	**313.20**

600mm Height

Addington Aluminium Type 10 Radiators - Gloss White

Size H x W	Delta △T30 Watts	Delta △T30 BTU	Delta △T50 Watts	Delta △T50 BTU	Element Output	Code	£ Ex VAT	£ Inc VAT
600 x 292mm	136	464	253	863	150W	86.0350	175.00	**210.00**
600 x 366mm	171	584	316	1078	150W	86.0351	202.00	**242.40**
600 x 440mm	205	700	379	1293	150W	86.0352	230.00	**276.00**
600 x 514mm	239	815	442	1508	300W	86.0353	256.00	**307.20**
600 x 588mm	273	931	505	1723	300W	86.0354	284.00	**340.80**
600 x 662mm	307	1047	568	1937	300W	86.0355	311.00	**373.20**
600 x 810mm	375	1279	694	2367	300W	86.0356	366.00	**439.20**
600 x 1032mm	477	1627	884	3015	600W	86.0357	449.00	**538.80**
600 x 1180mm	546	1862	1010	3445	600W	86.0358	502.00	**602.40**
600 x 1254mm	580	1978	1073	3659	600W	86.0359	527.00	**632.40**
600 x 1402mm	648	2210	1199	4089	750W	86.0508	583.00	**699.60**
600 x 1624mm	750	2558	1389	4737	900W	86.0509	669.00	**802.80**
600 x 1772mm	818	2790	1515	5167	900W	86.0510	727.00	**872.40**

800mm Height

Addington Aluminium Type10 Radiators - Gloss White

Size H x W	Delta △T30 Watts	Delta △T30 BTU	Delta △T50 Watts	Delta △T50 BTU	Element Output	Code	£ Ex VAT	£ Inc VAT
800 x 514mm	255	870	520	1774	300W	86.0360	305.00	**366.00**
800 x 588mm	292	996	595	2029	300W	86.0361	338.00	**405.60**

1000mm Height

Addington Aluminium Type 10 Radiators - Gloss White

Size H x W	Delta △T30 Watts	Delta △T30 BTU	Delta △T50 Watts	Delta △T50 BTU	Element Output	Code	£ Ex VAT	£ Inc VAT
1000 x 514mm	294	1003	596	2033	300W	86.0362	345.00	**414.00**
1000 x 588mm	336	1146	681	2323	300W	86.0363	385.00	**462.00**

1200mm Height

Addington Aluminium Type 10 Radiators - Gloss White

Size H x W	Delta △T30 Watts	Delta △T30 BTU	Delta △T50 Watts	Delta △T50 BTU	Element Output	Code	£ Ex VAT	£ Inc VAT
1200 x 514mm	356	1214	727	2480	300W	86.0364	387.00	**464.40**
1200 x 588mm	407	1388	831	2834	600W	86.0365	432.00	**518.40**

1400mm Height

Addington Aluminium Type 10 Radiators - Gloss White

Size H x W	Delta △T30 Watts	Delta △T30 BTU	Delta △T50 Watts	Delta △T50 BTU	Element Output	Code	£ Ex VAT	£ Inc VAT
1400 x 514mm	401	1368	792	2701	600W	86.0366	426.00	**511.20**
1400 x 588mm	459	1566	905	3087	600W	86.0367	477.00	**572.40**

1800mm Height

Addington Aluminium Type 10 Radiators - Gloss White

Size H x W	Delta △T30 Watts	Delta △T30 BTU	Delta △T50 Watts	Delta △T50 BTU	Element Output	Code	£ Ex VAT	£ Inc VAT
1800 x 292mm	293	1000	606	2067	600W	86.0368	321.00	**385.20**
1800 x 366mm	367	1252	757	2582	600W	86.0369	383.00	**459.60**
1800 x 440mm	440	1501	909	3100	600W	86.0370	441.00	**529.20**
1800 x 514mm	513	1750	1060	3615	900W	86.0371	501.00	**601.20**
1800 x 588mm	587	2002	1211	4130	900W	86.0372	557.00	**668.40**
1800 x 662mm	660	2251	1363	4648	900W	86.0506	622.00	**746.40**

All Addington Aluminium Type 10 models shown above are compatible with Element Type A

For element types see pages 324-337.

For 500 and 600mm Heights : Element can only be installed horizontally on the bottom header. Radiators that are electric only are restricted to the heat output of the elements.

For element types see pages 324-337.

For 800, 1000, 1200, 1400 and 1800mm Heights: Element can be installed vertically on the right-hand or left-hand side on the bottom header. Radiators that are electric only are restricted to the heat output of the elements. For dual fuel installations, element must be installed on flow side.

ADDINGTON ALUMINIUM TYPE10 COVER CAP SETS - CHROME

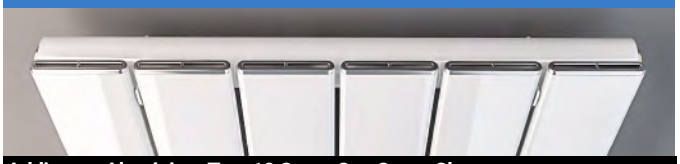

Addington Aluminium Type10 Cover Cap Sets - Chrome

Description	Code	£ Ex VAT	£ Inc VAT
Cover Cap Set 292mm	86.0426	27.00	**32.40**
Cover Cap Set 366mm	86.0427	31.00	**37.20**
Cover Cap Set 440mm	86.0428	36.00	**43.20**
Cover Cap Set 514mm	86.0429	40.00	**48.00**
Cover Cap Set 588mm	86.0430	44.00	**52.80**
Cover Cap Set 662mm	86.0431	48.00	**57.60**
Cover Cap Set 810mm	86.0432	56.00	**67.20**
Cover Cap Set 1032mm	86.0433	69.00	**82.80**
Cover Cap Set 1180mm	86.0434	77.00	**92.40**
Cover Cap Set 1254mm	86.0435	81.00	**97.20**
Cover Cap Set 1402mm	86.0576	98.00	**117.60**
Cover Cap Set 1624mm	86.0577	113.00	**135.60**
Cover Cap Set 1772mm	86.0578	123.00	**147.60**

Cover cap sets only include cover caps for the top or bottom of the radiator.

Aluminium Range

ADDINGTON ALUMINIUM TYPE 10 - MATT ANTHRACITE

Pictured 86.0395 Matt Anthracite with 91.0086 Towel Hangers x2

Pictured 86.0379 Matt Anthracite with 91.0093 Towel Hanger

Pictured 86.0382 Matt Anthracite

Aluminium Range

ADDINGTON ALUMINIUM TYPE 10 - MATT ANTHRACITE

A luxurious flat panelled radiator range with stunning clean lines which will be the focus of any room is now available also in aluminium. Available in horizontal or vertical sizes and different heights. Stunning towel hangers will complement the vertical design allowing room for your towels.

FEATURES

- Excellent heat conductivity and lightweight
- Only requires a low water volume
- Heats up very quickly
- Tested to BS EN 442 standards
- 5 Year Manufacturer's Warranty*
- Can be single or dual fuel, or all electric
- Radiators come with cover caps on top and bottom, the same colour as the radiator

* With conditions

Technical Tables & Drawings
Page 408-409

TECHNICAL INFORMATION

All measurements in Height by Width. For matching valves see pages 338-353. Corrosion inhibitor must be added to the heating system and maintained. Flow diverter must only be fitted when radiator installed on central heating system. For indirect heating systems only. Tappings are the width of the rail and 45mm off the wall. Price includes radiator and wall fixing sets, valves extra.

500mm Height

Addington Aluminium Type 10 Radiators - Matt Anthracite

Size H x W	Delta △T30 Watts	Delta △T30 BTU	Delta △T50 Watts	Delta △T50 BTU	Element Output	Code	£ Ex VAT	£ Inc VAT
500 x 514mm	171	584	338	1153	150W	86.0373	237.00	**284.40**
500 x 588mm	195	665	387	1320	150W	86.0374	261.00	**313.20**

600mm Height

Addington Aluminium Type 10 Radiators - Matt Anthracite

Size H x W	Delta △T30 Watts	Delta △T30 BTU	Delta △T50 Watts	Delta △T50 BTU	Element Output	Code	£ Ex VAT	£ Inc VAT
600 x 292mm	136	464	253	863	150W	86.0375	175.00	**210.00**
600 x 366mm	171	584	316	1078	150W	86.0376	202.00	**242.40**
600 x 440mm	205	700	379	1293	150W	86.0377	230.00	**276.00**
600 x 514mm	239	815	442	1508	300W	86.0378	256.00	**307.20**
600 x 588mm	273	931	505	1723	300W	86.0379	284.00	**340.80**
600 x 662mm	307	1047	568	1937	300W	86.0380	311.00	**373.20**
600 x 810mm	375	1279	694	2367	300W	86.0381	366.00	**439.20**
600 x 1032mm	477	1627	884	3015	600W	86.0382	449.00	**538.80**
600 x 1180mm	546	1862	1010	3445	600W	86.0383	502.00	**602.40**
600 x 1254mm	580	1978	1073	3659	600W	86.0384	527.00	**632.40**
600 x 1402mm	648	2210	1199	4089	750W	86.0511	583.00	**699.60**
600 x 1624mm	750	2558	1389	4737	900W	86.0512	669.00	**802.80**
600 x 1772mm	818	2790	1515	5167	900W	86.0513	727.00	**872.40**

800mm Height

Addington Aluminium Type10 Radiators - Matt Anthracite

Size H x W	Delta △T30 Watts	Delta △T30 BTU	Delta △T50 Watts	Delta △T50 BTU	Element Output	Code	£ Ex VAT	£ Inc VAT
800 x 514mm	255	870	520	1774	300W	86.0385	305.00	**366.00**
800 x 588mm	292	996	595	2029	300W	86.0386	338.00	**405.60**

1000mm Height

Addington Aluminium Type 10 Radiators - Matt Anthracite

Size H x W	Delta △T30 Watts	Delta △T30 BTU	Delta △T50 Watts	Delta △T50 BTU	Element Output	Code	£ Ex VAT	£ Inc VAT
1000 x 514mm	294	1003	596	2033	300W	86.0387	345.00	**414.00**
1000 x 588mm	336	1146	681	2323	300W	86.0388	385.00	**462.00**

1200mm Height

Addington Aluminium Type 10 Radiators - Matt Anthracite

Size H x W	Delta △T30 Watts	Delta △T30 BTU	Delta △T50 Watts	Delta △T50 BTU	Element Output	Code	£ Ex VAT	£ Inc VAT
1200 x 514mm	356	1214	727	2480	300W	86.0389	387.00	**464.40**
1200 x 588mm	407	1388	831	2834	600W	86.0390	432.00	**518.40**

1400mm Height

Addington Aluminium Type 10 Radiators - Matt Anthracite

Size H x W	Delta △T30 Watts	Delta △T30 BTU	Delta △T50 Watts	Delta △T50 BTU	Element Output	Code	£ Ex VAT	£ Inc VAT
1400 x 514mm	401	1368	792	2701	600W	86.0391	426.00	**511.20**
1400 x 588mm	459	1566	905	3087	600W	86.0392	477.00	**572.40**

1800mm Height

Addington Aluminium Type 10 Radiators - Matt Anthracite

Size H x W	Delta △T30 Watts	Delta △T30 BTU	Delta △T50 Watts	Delta △T50 BTU	Element Output	Code	£ Ex VAT	£ Inc VAT
1800 x 292mm	293	1000	606	2067	600W	86.0393	321.00	**385.20**
1800 x 366mm	367	1252	757	2582	600W	86.0394	383.00	**459.60**
1800 x 440mm	440	1501	909	3100	600W	86.0395	441.00	**529.20**
1800 x 514mm	513	1750	1060	3615	900W	86.0396	501.00	**601.20**
1800 x 588mm	587	2002	1211	4130	900W	86.0397	557.00	**668.40**
1800 x 662mm	660	2251	1363	4648	900W	86.0507	622.00	**746.40**

All Addington Aluminium Type 10 models shown above are compatible with Element Type A

For element types see pages 324-337.

For 500 and 600mm Heights : Element can only be installed horizontally on the bottom header. Radiators that are electric only are restricted to the heat output of the elements.

For element types see pages 324-337.

For 800, 1000, 1200, 1400 and 1800mm Heights: Element can be installed vertically on the right-hand or left-hand side on the bottom header. Radiators that are electric only are restricted to the heat output of the elements. For dual fuel installations, element must be installed on flow side.

ADDINGTON ALUMINIUM TYPE10 COVER CAP SETS - CHROME

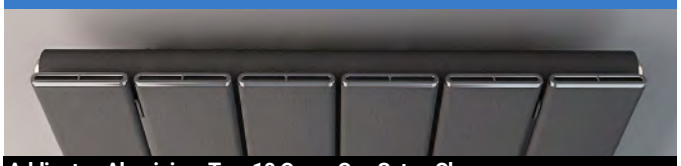

Addington Aluminium Type10 Cover Cap Sets - Chrome

Description	Code	£ Ex VAT	£ Inc VAT
Cover Cap Set 292mm	86.0426	27.00	**32.40**
Cover Cap Set 366mm	86.0427	31.00	**37.20**
Cover Cap Set 440mm	86.0428	36.00	**43.20**
Cover Cap Set 514mm	86.0429	40.00	**48.00**
Cover Cap Set 588mm	86.0430	44.00	**52.80**
Cover Cap Set 662mm	86.0431	48.00	**57.60**
Cover Cap Set 810mm	86.0432	56.00	**67.20**
Cover Cap Set 1032mm	86.0433	69.00	**82.80**
Cover Cap Set 1180mm	86.0434	77.00	**92.40**
Cover Cap Set 1254mm	86.0435	81.00	**97.20**
Cover Cap Set 1402mm	86.0576	98.00	**117.60**
Cover Cap Set 1624mm	86.0577	113.00	**135.60**
Cover Cap Set 1772mm	86.0578	123.00	**147.60**

Cover cap sets only include cover caps for the top or bottom of the radiator.

Aluminium Range

ADDINGTON ALUMINIUM TYPE 20 - GLOSS WHITE

Pictured 86.0409 Gloss White

Pictured 86.0402 Gloss White

Pictured 86.0406 Gloss White

Bar Dimensions (mm)

Vertical Bars 70 x 11mm

Aluminium Range

ADDINGTON ALUMINIUM TYPE 20 - GLOSS WHITE

A luxurious double flat panelled radiator range with stunning clean lines which will be the focus of any room is now available also in aluminium. Available in horizontal or vertical sizes and different heights.

FEATURES

- Excellent heat conductivity and lightweight
- Only requires a low water volume
- Heats up very quickly
- Tested to BS EN 442 standards
- 5 Year Manufacturer's Warranty*
- Can be single or dual fuel, or all electric
- Radiators come with cover caps on top and bottom, the same colour as the radiator

* With conditions

Technical Tables & Drawings
Page 410-411

TECHNICAL INFORMATION

All measurements in Height by Width. For matching valves see pages 338-353. Corrosion inhibitor must be added to the heating system and maintained. Flow diverter must only be fitted when radiator installed on central heating system. For indirect heating systems only. Tappings are the width of the rail and 65mm off the wall. Price includes radiator and wall fixing sets, valves extra.

For element types see pages 324-337.

For 600mm Heights : Element can only be installed horizontally on the bottom header. Radiators that are electric only are restricted to the heat output of the elements.

For element types see pages 324-337.

For 1800mm Heights: Element can be installed vertically on the right-hand or left-hand side on the bottom header. Radiators that are electric only are restricted to the heat output of the elements. For dual fuel installations, element must be installed on flow side.

600mm Height

Addington Aluminium Type 20 Radiators - Gloss White

Size H x W	Delta △T30		Delta △T50		Element Output	Code	£ Ex VAT	£ Inc VAT
	Watts	BTU	Watts	BTU				
600 x 292mm	185	631	352	1201	150W	86.0398	222.00	**266.40**
600 x 366mm	232	792	440	1501	300W	86.0399	258.00	**309.60**
600 x 440mm	278	948	528	1801	300W	86.0400	296.00	**355.20**
600 x 514mm	324	1105	616	2101	300W	86.0401	334.00	**400.80**
600 x 588mm	371	1266	704	2401	300W	86.0402	373.00	**447.60**
600 x 662mm	417	1422	792	2701	300W	86.0403	416.00	**499.20**
600 x 810mm	510	1740	968	3301	600W	86.0404	491.00	**589.20**
600 x 1032mm	649	2214	1232	4202	600W	86.0405	606.00	**727.20**
600 x 1180mm	741	2527	1408	4802	900W	86.0406	683.00	**819.60**
600 x 1254mm	788	2688	1496	5102	900W	86.0407	723.00	**867.60**
600 x 1402mm	880	3001	1672	5702	900W	86.0516	807.00	**968.40**
600 x 1624mm	1019	3475	1935	6599	900W	86.0517	928.00	**1113.60**
600 x 1772mm	1112	3792	2111	7199	900W	86.0518	1009.00	**1210.80**

1800mm Height

Addington Aluminium Type 20 Radiators - Gloss White

Size H x W	Delta △T30		Delta △T50		Element Output	Code	£ Ex VAT	£ Inc VAT
	Watts	BTU	Watts	BTU				
1800 x 366mm	452	1542	909	3100	600W	86.0408	552.00	**662.40**
1800 x 440mm	542	1849	1091	3721	900W	86.0409	657.00	**788.40**
1800 x 514mm	633	2159	1273	4341	900W	86.0410	768.00	**921.60**
1800 x 588mm	723	2466	1455	4962	900W	86.0411	873.00	**1047.60**
1800 x 662mm	814	2776	1637	5583	900W	86.0514	976.00	**1171.20**

All Addington Aluminium Type 20 models shown above are compatible with Element Type A

Radiator Valves
Page 338-353

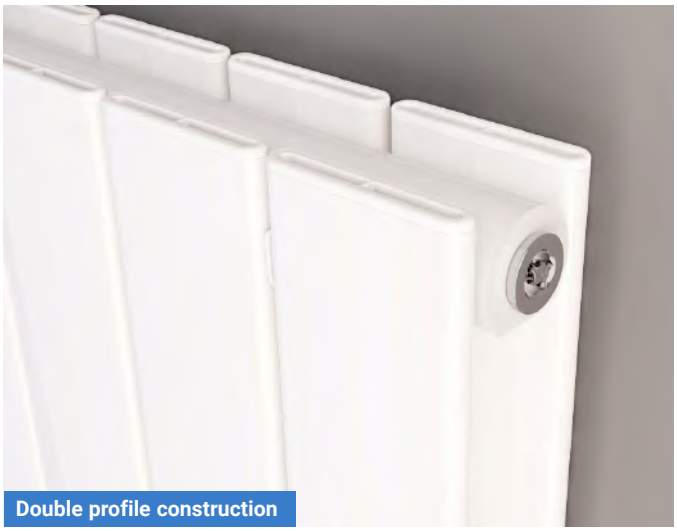

Double profile construction

ADDINGTON ALUMINIUM TYPE 20 COVER CAP SETS - CHROME

Addington Aluminium Type 20 Cover Cap Sets - Chrome

Description	Code	£ Ex VAT	£ Inc VAT
Cover Cap Set 292mm	86.0436	44.00	**52.80**
Cover Cap Set 366mm	86.0437	52.00	**62.40**
Cover Cap Set 440mm	86.0438	60.00	**72.00**
Cover Cap Set 514mm	86.0439	69.00	**82.80**
Cover Cap Set 588mm	86.0440	77.00	**92.40**
Cover Cap Set 662mm	86.0441	85.00	**102.00**
Cover Cap Set 810mm	86.0442	102.00	**122.40**
Cover Cap Set 1032mm	86.0443	127.00	**152.40**
Cover Cap Set 1180mm	86.0444	143.00	**171.60**
Cover Cap Set 1254mm	86.0445	151.00	**181.20**
Cover Cap Set 1402mm	86.0579	164.00	**196.80**
Cover Cap Set 1624mm	86.0580	190.00	**228.00**
Cover Cap Set 1772mm	86.0581	203.00	**243.60**

Cover cap sets only include cover caps for the top or bottom of the radiator.

Aluminium Range

ADDINGTON ALUMINIUM TYPE 20 - MATT ANTHRACITE

Pictured 86.0425 Matt Anthracite

Pictured 86.0417 Matt Anthracite

Pictured 86.0421 Matt Anthracite

Bar Dimensions (mm)

Vertical Bars 70 x 11mm

Aluminium Range

ADDINGTON ALUMINIUM TYPE 20 - MATT ANTHRACITE

A luxurious double flat panelled radiator range with stunning clean lines which will be the focus of any room is now available also in aluminium. Available in horizontal or vertical sizes and different heights.

FEATURES

- Excellent heat conductivity and lightweight
- Only requires a low water volume
- Heats up very quickly
- Tested to BS EN 442 standards
- 5 Year Manufacturer's Warranty*
- Can be single or dual fuel, or all electric
- Radiators come with cover caps on top and bottom, the same colour as the radiator

* With conditions

Technical Tables & Drawings
Page 410-411

600mm Height

Addington Aluminium Type 20 Radiators - Matt Anthracite

Size H x W	Delta △T30		Delta △T50		Element Output	Code	£ Ex VAT	£ Inc VAT
	Watts	BTU	Watts	BTU				
600 x 292mm	185	631	352	1201	150W	86.0412	222.00	**266.40**
600 x 366mm	232	792	440	1501	300W	86.0413	258.00	**309.60**
600 x 440mm	278	948	528	1801	300W	86.0414	296.00	**355.20**
600 x 514mm	324	1105	616	2101	300W	86.0415	334.00	**400.80**
600 x 588mm	371	1266	704	2401	300W	86.0416	373.00	**447.60**
600 x 662mm	417	1422	792	2701	300W	86.0417	416.00	**499.20**
600 x 810mm	510	1740	968	3301	600W	86.0418	491.00	**589.20**
600 x 1032mm	649	2214	1232	4202	600W	86.0419	606.00	**727.20**
600 x 1180mm	741	2527	1408	4802	900W	86.0420	683.00	**819.60**
600 x 1254mm	788	2688	1496	5102	900W	86.0421	723.00	**867.60**
600 x 1402mm	880	3001	1672	5702	900W	86.0519	807.00	**968.40**
600 x 1624mm	1019	3475	1935	6599	900W	86.0520	928.00	**1113.60**
600 x 1772mm	1112	3792	2111	7199	900W	86.0521	1009.00	**1210.80**

1800mm Height

Addington Aluminium Type 20 Radiators - Matt Anthracite

Size H x W	Delta △T30		Delta △T50		Element Output	Code	£ Ex VAT	£ Inc VAT
	Watts	BTU	Watts	BTU				
1800 x 366mm	452	1542	909	3100	600W	86.0422	552.00	**662.40**
1800 x 440mm	542	1849	1091	3721	900W	86.0423	657.00	**788.40**
1800 x 514mm	633	2159	1273	4341	900W	86.0424	768.00	**921.60**
1800 x 588mm	723	2466	1455	4962	900W	86.0425	873.00	**1047.60**
1800 x 662mm	814	2776	1637	5583	900W	86.0515	976.00	**1171.20**

All Addington Aluminium Type 20 models shown above are compatible with Element Type A

Double profile construction

TECHNICAL INFORMATION

All measurements in Height by Width. For matching valves see pages 338-353. Corrosion inhibitor must be added to the heating system and maintained. Flow diverter must only be fitted when radiator installed on central heating system. For indirect heating systems only. Tappings are the width of the rail and 65mm off the wall. Price includes radiator and wall fixing sets, valves extra.

For element types see pages 324-337.

For 600mm Heights : Element can only be installed horizontally on the bottom header. Radiators that are electric only are restricted to the heat output of the elements.

For element types see pages 324-337.

For 1800mm Heights: Element can be installed vertically on the right-hand or left-hand side on the bottom header. Radiators that are electric only are restricted to the heat output of the elements. For dual fuel installations, element must be installed on flow side.

Radiator Valves
Page 338-353

ADDINGTON ALUMINIUM TYPE 20 COVER CAP SETS - CHROME

Addington Aluminium Type 20 Cover Cap Sets - Chrome

Description	Code	£ Ex VAT	£ Inc VAT
Cover Cap Set 292mm	86.0436	44.00	**52.80**
Cover Cap Set 366mm	86.0437	52.00	**62.40**
Cover Cap Set 440mm	86.0438	60.00	**72.00**
Cover Cap Set 514mm	86.0439	69.00	**82.80**
Cover Cap Set 588mm	86.0440	77.00	**92.40**
Cover Cap Set 662mm	86.0441	85.00	**102.00**
Cover Cap Set 810mm	86.0442	102.00	**122.40**
Cover Cap Set 1032mm	86.0443	127.00	**152.40**
Cover Cap Set 1180mm	86.0444	143.00	**171.60**
Cover Cap Set 1254mm	86.0445	151.00	**181.20**
Cover Cap Set 1402mm	86.0579	164.00	**196.80**
Cover Cap Set 1624mm	86.0580	190.00	**228.00**
Cover Cap Set 1772mm	86.0581	203.00	**243.60**

Cover cap sets only include cover caps for the top or bottom of the radiator.

Aluminium Range

CHARLTON VERTICAL

Pictured 89.0128 Matt White with 89.0134 Towel Hangers x3

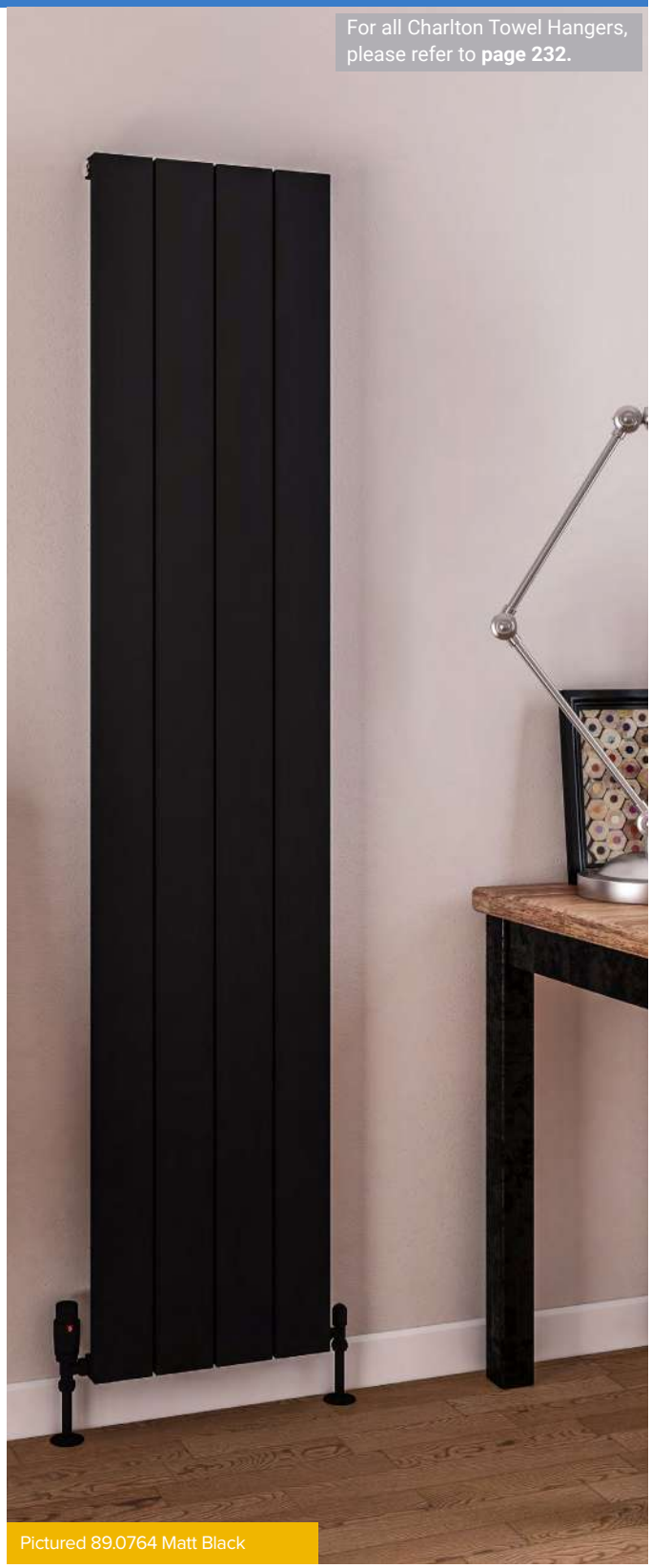

Pictured 89.0764 Matt Black

For all Charlton Towel Hangers, please refer to **page 232.**

A contemporary versatile aluminium radiator style, that come in a variety of sizes and three finishes, with an optional extra of stylish towel hangers.

Warranty 5 Year | Heating | All Electric | Dual-Fuel

FEATURES

- Excellent heat conductivity and lightweight
- Only requires a low water volume
- Heats up very quickly
- Radiators come with cover caps on top and bottom, same as radiator colour.
- Can be single, dual fuel or all electric
- Tested to BS EN 442 standards
- 5 Year Manufacturer's Warranty*

* With conditions

Technical Tables & Drawings
Page 410-411

Aluminium Range

CHARLTON VERTICAL

Matt White | Matt Anthracite | Matt Black

Pictured 89.0960 Matt Anthracite with 89.0182 Towel Hangers x2

Charlton Vertical Aluminium Radiators - Matt White

Size H x W	Delta △T30 Watts	Delta △T30 BTU	Delta △T50 Watts	Delta △T50 BTU	Element Output	Code	£ Ex VAT	£ Inc VAT
600 x 280mm	123	420	240	819	150W	89.0758	182.00	**218.40**
1200 x 280mm	238	812	461	1573	300W	89.0925	251.00	**301.20**
1200 x 375mm	315	1075	611	2084	300W	89.0926	323.00	**387.60**
1200 x 470mm	392	1337	760	2592	450W	89.0927	395.00	**474.00**
1200 x 565mm	468	1596	908	3097	600W	89.0928	472.00	**566.40**
1800 x 280mm	345	1177	667	2275	450W	89.0128	307.00	**368.40**
1800 x 375mm	457	1559	884	3015	600W	89.0130	397.00	**476.40**
1800 x 470mm	569	1941	1099	3748	750W	89.0132	479.00	**574.80**
1800 x 565mm	679	2316	1313	4478	1000W	89.0759	595.00	**714.00**

Charlton Vertical Aluminium Radiators - Matt Anthracite

Size H x W	Delta △T30 Watts	Delta △T30 BTU	Delta △T50 Watts	Delta △T50 BTU	Element Output	Code	£ Ex VAT	£ Inc VAT
600 x 280mm	123	420	240	819	150W	89.0760	182.00	**218.40**
1200 x 280mm	238	812	461	1573	300W	89.0958	251.00	**301.20**
1200 x 375mm	315	1075	611	2084	300W	89.0959	323.00	**387.60**
1200 x 470mm	392	1337	760	2592	450W	89.0960	395.00	**474.00**
1200 x 565mm	468	1596	908	3097	600W	89.0961	472.00	**566.40**
1800 x 280mm	345	1177	667	2275	450W	89.0129	307.00	**368.40**
1800 x 375mm	457	1559	884	3015	600W	89.0131	397.00	**476.40**
1800 x 470mm	569	1941	1099	3748	750W	89.0133	479.00	**574.80**
1800 x 565mm	679	2316	1313	4478	1000W	89.0761	595.00	**714.00**

Charlton Vertical Aluminium Radiators - Matt Black

Size H x W	Delta △T30 Watts	Delta △T30 BTU	Delta △T50 Watts	Delta △T50 BTU	Element Output	Code	£ Ex VAT	£ Inc VAT
600 x 280mm	123	420	240	819	150W	89.0762	182.00	**218.40**
1200 x 280mm	238	812	461	1573	300W	89.0979	251.00	**301.20**
1200 x 375mm	315	1075	611	2084	300W	89.0980	323.00	**387.60**
1200 x 470mm	392	1337	760	2592	450W	89.0981	395.00	**474.00**
1200 x 565mm	468	1596	908	3097	600W	89.0982	472.00	**566.40**
1800 x 280mm	345	1177	667	2275	450W	89.0763	307.00	**368.40**
1800 x 375mm	457	1559	884	3015	600W	89.0764	397.00	**476.40**
1800 x 470mm	569	1941	1099	3748	750W	89.0765	479.00	**574.80**
1800 x 565mm	679	2316	1313	4478	1000W	89.0766	595.00	**714.00**

Prices include radiator and wall fixing sets, valves and accessories extra.

All Charlton models shown above are compatible with Element Type A, A+, F* and G* (*only if cable goes through the wall)

TECHNICAL INFORMATION

All measurements in Height by Width. For matching valves see pages 338-353. Corrosion inhibitor must be added to the heating system and maintained. Flow diverter must only be fitted when radiator installed on central heating system. For indirect heating systems only. Tappings are the width of the rail and 33 or 53mm off the wall.

Charlton Cover Cap Sets - Chrome

Description	Code	£ Ex VAT	£ Inc VAT
Cover Cap Set 280mm	89.0165	18.00	**21.60**
Cover Cap Set 375mm	89.0166	21.00	**25.20**
Cover Cap Set 470mm	89.0167	23.00	**27.60**
Cover Cap Set 565mm	89.0837	28.00	**33.60**

Cover cap sets only include cover caps for the top or bottom of the radiator.

For element types see pages 324-337.

Element can only be installed vertically on the right-hand or left-hand side on the bottom header. Radiators that are electric only are restricted to the heat output of the elements. Element size can be increased to full capacity of rail if using element type F or G. For dual fuel installations, element must be installed on flow side.

Aluminium Range

CHARLTON HORIZONTAL

Pictured 89.0929 Matt White

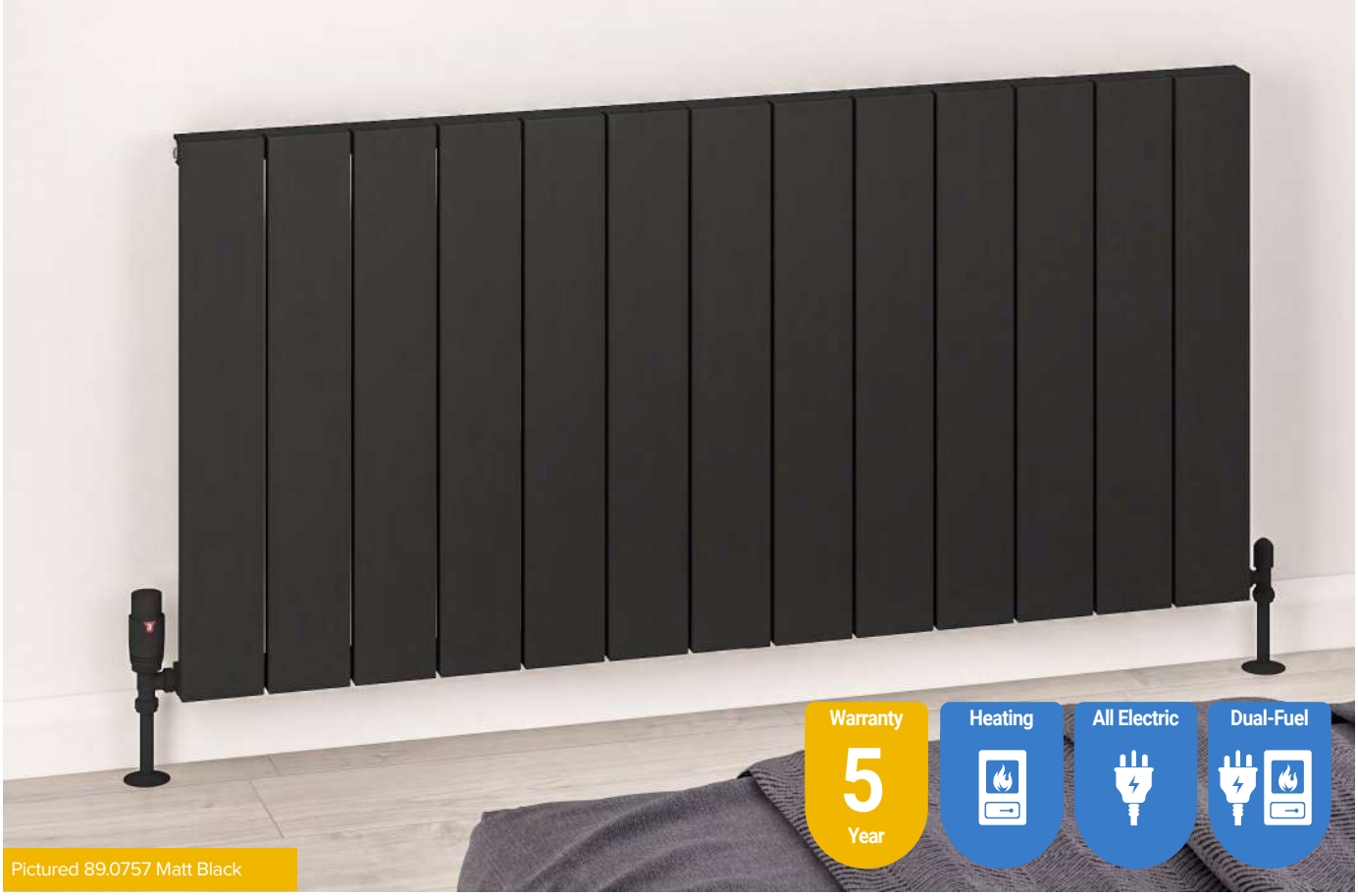

Pictured 89.0757 Matt Black

A luxurious flat panelled radiator range with stunning clean lines which will be the focus of any room. Available in a choice of colours and in horizontal or vertical designs.

Aluminium Range

CHARLTON HORIZONTAL

Pictured 89.0751 Matt Anthracite

A contemporary versatile aluminium radiator style, that come in three finishes, with an optional extra of stylish towel hangers.

Charlton Horizontal Aluminium Radiators - Matt White

Size H x W	Delta △T30 Watts	Delta △T30 BTU	Delta △T50 Watts	Delta △T50 BTU	Element Output	Code	£ Ex VAT	£ Inc VAT
600 x 470mm	203	693	396	1351	300W	89.0743	252.00	**302.40**
600 x 660mm	282	962	550	1876	450W	89.0744	332.00	**398.40**
600 x 850mm	360	1228	701	2391	600W	89.0745	415.00	**498.00**
600 x 1040mm	437	1491	852	2906	750W	89.0746	493.00	**591.60**
600 x 1230mm	514	1753	1002	3417	900W	89.0747	580.00	**696.00**
600 x 1420mm	590	2012	1151	3925	900W	89.0929	679.00	**814.80**

Charlton Horizontal Aluminium Radiators - Matt Anthracite

Size H x W	Delta △T30 Watts	Delta △T30 BTU	Delta △T50 Watts	Delta △T50 BTU	Element Output	Code	£ Ex VAT	£ Inc VAT
600 x 470mm	203	693	396	1351	300W	89.0748	252.00	**302.40**
600 x 660mm	282	962	550	1876	450W	89.0749	332.00	**398.40**
600 x 850mm	360	1228	701	2391	600W	89.0750	415.00	**498.00**
600 x 1040mm	437	1491	852	2906	750W	89.0751	493.00	**591.60**
600 x 1230mm	514	1753	1002	3417	900W	89.0752	580.00	**696.00**
600 x 1420mm	590	2012	1151	3925	900W	89.0962	679.00	**814.80**

Charlton Horizontal Aluminium Radiators - Matt Black

Size H x W	Delta △T30 Watts	Delta △T30 BTU	Delta △T50 Watts	Delta △T50 BTU	Element Output	Code	£ Ex VAT	£ Inc VAT
600 x 470mm	203	693	396	1351	300W	89.0753	252.00	**302.40**
600 x 660mm	282	962	550	1876	450W	89.0754	332.00	**398.40**
600 x 850mm	360	1228	701	2391	600W	89.0755	415.00	**498.00**
600 x 1040mm	437	1491	852	2906	750W	89.0756	493.00	**591.60**
600 x 1230mm	514	1753	1002	3417	900W	89.0757	580.00	**696.00**
600 x 1420mm	590	2012	1151	3925	900W	89.0983	679.00	**814.80**

Prices include radiator and wall fixing sets, valves and accessories extra.

All Charlton models shown above are compatible with Element Type A, A+, C and H

For element types see pages 324-337.

Element can only be installed horizontally on the bottom header. Radiators that are electric only are restricted to the heat output of the elements (Type C&H up to 900 watts).

FEATURES

- Excellent heat conductivity and lightweight
- Only requires a low water volume
- Heats up very quickly
- Radiators come with cover caps on top and bottom, same as radiator colour.
- Can be single, dual fuel or all electric
- Tested to BS EN 442 standards
- 5 Year Manufacturer's Warranty*

* With conditions

Technical Tables & Drawings
Page 410-411

TECHNICAL INFORMATION

All measurements in Height by Width. For matching valves see pages 338-353. Corrosion inhibitor must be added to the heating system and maintained. Flow diverter must only be fitted when radiator installed on central heating system. For indirect heating systems only. Tappings are the width of the rail and 33 or 53mm off the wall. Price includes radiator and wall fixing sets, valves extra.

Charlton Cover Cap Sets - Chrome

Description	Code	£ Ex VAT	£ Inc VAT
Cover Cap Set 470mm	89.0167	23.00	**27.60**
Cover Cap Set 660mm	89.0838	33.00	**39.60**
Cover Cap Set 850mm	89.0839	40.00	**48.00**
Cover Cap Set 1040mm	89.0840	47.00	**56.40**
Cover Cap Set 1230mm	89.0841	56.00	**67.20**
Cover Cap Set 1420mm	89.1404	61.00	**73.20**

Cover cap sets only include cover caps for the top or bottom of the radiator.

Radiator Valves
Page 338-353

Aluminium Range

CHARLTON STANDARD TOWEL HANGERS

Towel Hanger - Matt White

Size	Code	£ Ex VAT	£ Inc VAT
280mm	89.0177	62.00	**74.40**
375mm	89.0178	66.00	**79.20**
470mm	89.0179	74.00	**88.80**
565mm	86.0333	78.00	**93.60**

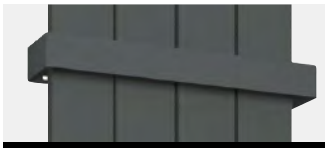

Towel Hanger - Matt Anthracite

Size	Code	£ Ex VAT	£ Inc VAT
280mm	89.0180	62.00	**74.40**
375mm	89.0181	66.00	**79.20**
470mm	89.0182	74.00	**88.80**
565mm	86.0334	78.00	**93.60**

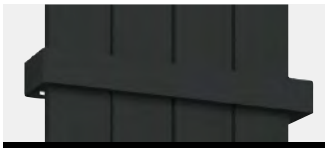

Towel Hanger - Matt Black

Size	Code	£ Ex VAT	£ Inc VAT
280mm	89.0183	62.00	**74.40**
375mm	89.0184	66.00	**79.20**
470mm	89.0185	74.00	**88.80**
565mm	86.0335	78.00	**93.60**

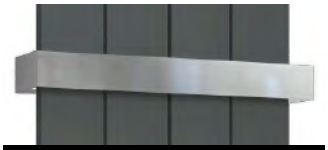

Towel Hanger - Chrome

Size	Code	£ Ex VAT	£ Inc VAT
280mm	86.0025	53.00	**63.60**
375mm	86.0026	62.00	**74.40**
470mm	86.0027	69.00	**82.80**
565mm	86.0336	72.00	**86.40**

TECHNICAL INFORMATION

Material: **Steel (Premium: Stainless Steel - Grade 304)**

1800mm height radiators come with 3 pre-drilled towel hanger locations with a maximum of 3 towel hangers - all widths; 280, 375, 470 and 565mm. and 1200mm height radiators come with 2 pre-drilled towel hanger locations with a max. of 2 towel hangers. 600mm height radiators come with 1 pre-drilled towel hanger location, with a maximum of 1 towel hanger - 280mm width. The Charlton Standard Towel Hangers will add approx 8mm width on each side once fitted to the radiator.

600mm height x 470mm width radiator can have one towel hanger.

Can be fitted after installation only on high adjustment bracket fitting.

Towel Hanger - Brushed Brass

Size	Code	£ Ex VAT	£ Inc VAT
280mm	41.0616	56.00	**67.20**
375mm	41.0617	63.00	**75.60**
470mm	41.0618	72.00	**86.40**
565mm	41.0619	76.00	**91.20**

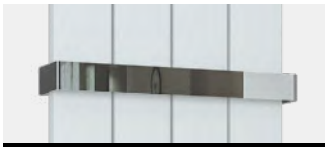

Towel Hanger - Mirror Polished Premium

Size	Code	£ Ex VAT	£ Inc VAT
280mm	86.0198	73.00	**87.60**
375mm	86.0199	80.00	**96.00**
470mm	86.0200	87.00	**104.40**
565mm	86.0337	93.00	**111.60**

CHARLTON FLAT STYLE TOWEL HANGERS

SINGLE FLAT STYLE

Towel Hanger - Matt White

Size	Code	£ Ex VAT	£ Inc VAT
280mm	89.0283	72.00	**86.40**
375mm	89.0284	79.00	**94.80**
470mm	89.0285	89.00	**106.80**
565mm	91.0163	95.00	**114.00**
660mm	89.0286	100.00	**120.00**
850mm	89.0287	112.00	**134.40**

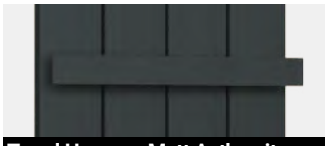

Towel Hanger - Matt Anthracite

Size	Code	£ Ex VAT	£ Inc VAT
280mm	89.0288	72.00	**86.40**
375mm	89.0289	79.00	**94.80**
470mm	89.0290	89.00	**106.80**
565mm	91.0164	95.00	**114.00**
660mm	89.0291	100.00	**120.00**
850mm	89.0292	112.00	**134.40**

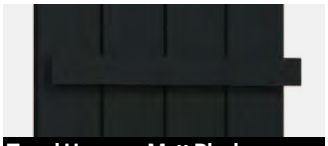

Towel Hanger - Matt Black

Size	Code	£ Ex VAT	£ Inc VAT
280mm	89.0293	72.00	**86.40**
375mm	89.0294	79.00	**94.80**
470mm	89.0295	89.00	**106.80**
565mm	91.0165	95.00	**114.00**
660mm	89.0296	100.00	**120.00**
850mm	89.0297	112.00	**134.40**

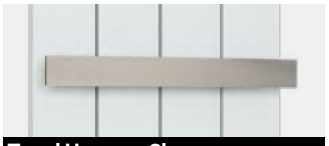

Towel Hanger - Chrome

Size	Code	£ Ex VAT	£ Inc VAT
280mm	91.0094	98.00	**117.60**
375mm	91.0095	100.00	**120.00**
470mm	91.0096	102.00	**122.40**
565mm	91.0166	103.00	**123.60**
660mm	91.0097	108.00	**129.60**
850mm	91.0098	115.00	**138.00**

DOUBLE FLAT STYLE

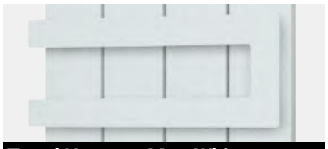

Towel Hanger - Matt White

Size	Code	£ Ex VAT	£ Inc VAT
280mm	89.0369	88.00	**105.60**
375mm	89.0370	92.00	**110.40**
470mm	89.0371	103.00	**123.60**
565mm	91.0167	114.00	**136.80**
660mm	89.0372	121.00	**145.20**
850mm	89.0373	135.00	**162.00**

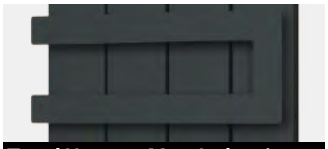

Towel Hanger - Matt Anthracite

Size	Code	£ Ex VAT	£ Inc VAT
280mm	89.0374	88.00	**105.60**
375mm	89.0375	92.00	**110.40**
470mm	89.0376	103.00	**123.60**
565mm	91.0168	114.00	**136.80**
660mm	89.0377	121.00	**145.20**
850mm	89.0378	135.00	**162.00**

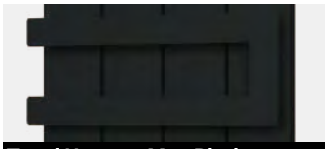

Towel Hanger - Matt Black

Size	Code	£ Ex VAT	£ Inc VAT
280mm	89.0379	88.00	**105.60**
375mm	89.0380	92.00	**110.40**
470mm	89.0381	103.00	**123.60**
565mm	91.0169	114.00	**136.80**
660mm	89.0382	121.00	**145.20**
850mm	89.0383	135.00	**162.00**

Towel Hanger - Chrome

Size	Code	£ Ex VAT	£ Inc VAT
280mm	91.0114	124.00	**148.80**
375mm	91.0115	130.00	**156.00**
470mm	91.0116	132.00	**158.40**
565mm	91.0170	138.00	**165.60**
660mm	91.0117	142.00	**170.40**
850mm	91.0118	154.00	**184.80**

TECHNICAL INFORMATION

Material: **Steel**

Vertical and Horizontal Radiators:

Flat & Double Flat Style Hangers are compatible with both Vertical and Horizontal radiators.(Depending on the radiators and hangers width)

Must be fitted before installation!

Hanger Fitting Widths
96/191/286/381/476/666mm

Hanger Fitting Widths
96/191/286/381/476/666mm

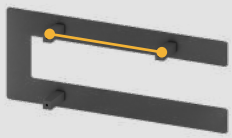

Aluminium Range

CHARLTON FLAT TRIPLE TOWEL HANGER

Brushed Stainless Steel

Polished Stainless Steel

Flat Triple Hanger - Brushed Stainless Steel

Size	Code	£ Ex VAT	£ Inc VAT
280mm	101.0048	240.00	**288.00**
375mm	101.0049	261.00	**313.20**
470mm	101.0050	299.00	**358.80**
565mm	101.0064	335.00	**402.00**

Flat Triple Hanger - Polished Stainless Steel

Size	Code	£ Ex VAT	£ Inc VAT
280mm	101.0054	240.00	**288.00**
375mm	101.0055	261.00	**313.20**
470mm	101.0056	299.00	**358.80**
565mm	101.0065	335.00	**402.00**

CHARLTON CURVED TRIPLE TOWEL HANGER

Brushed Stainless Steel

Polished Stainless Steel

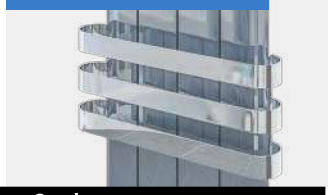

Curved Triple Hanger - Brushed Stainless Steel

Size	Code	£ Ex VAT	£ Inc VAT
280mm	101.0051	240.00	**288.00**
375mm	101.0052	261.00	**313.20**
470mm	101.0053	299.00	**358.80**
565mm	101.0066	335.00	**402.00**

Curved Triple Hanger - Polished Stainless Steel

Size	Code	£ Ex VAT	£ Inc VAT
280mm	101.0057	240.00	**288.00**
375mm	101.0058	261.00	**313.20**
470mm	101.0059	299.00	**358.80**
565mm	101.0067	335.00	**402.00**

TECHNICAL INFORMATION

Material: **Stainless Steel - Grade 304**

Vertical Radiators:

1800mm height radiators comes with 3 pre-drilled towel hanger locations. 600mm height radiators come with 1 pre-drilled towel hanger location. The flat triple & curved triple towel hangers are only compatible with the Vertical Radiators and can be fitted to the pre-drilled holes on 1800mm & 600mm height radiators. **Can be fitted after installation only on high adjustment bracket fitting.**

Horizontal Radiators:

The flat triple & curved triple towel hangers are not suitable for horizontal radiators.

CHARLTON DESIGNER TOWEL HANGERS

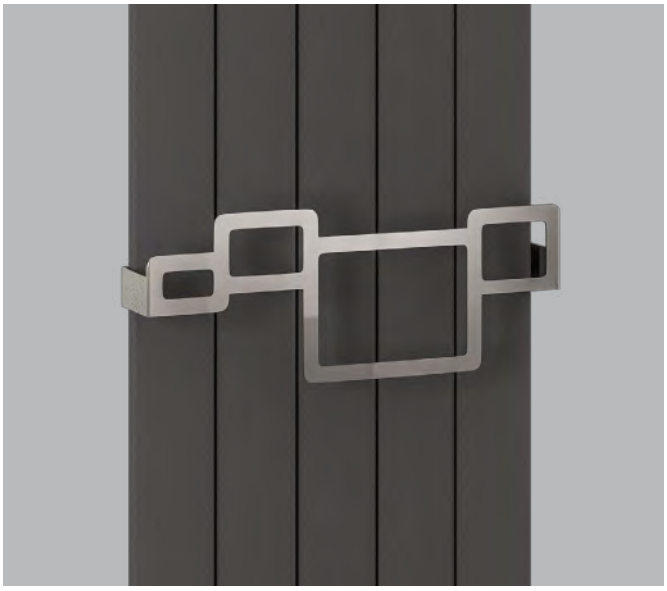

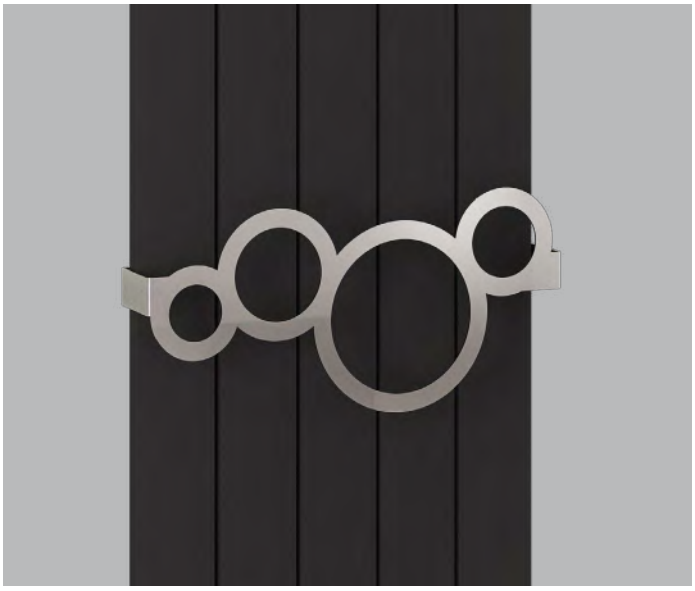

Square Style

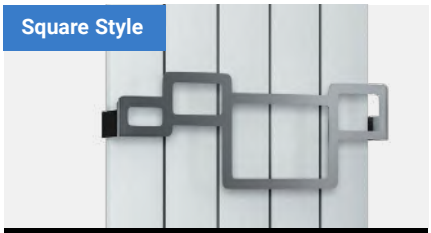

Square Towel Hanger - Chrome

Size	Code	£ Ex VAT	£ Inc VAT
375mm	101.0084	83.00	**99.60**
470mm	101.0085	96.00	**115.20**
565mm	101.0086	112.00	**134.40**

Circle Style

Circle Towel Hanger - Chrome

Size	Code	£ Ex VAT	£ Inc VAT
375mm	101.0108	84.00	**100.80**
470mm	101.0109	98.00	**117.60**
565mm	101.0110	116.00	**139.20**

TECHNICAL INFORMATION

Material: **Steel**

Square, Triangle and Circle Towel Hangers are only compatible with vertical radiators and can be fitted to one of the three pre-drilled holes on the 1800mm height radiators and to one of the two pre-drilled holes of the 1200mm height radiators. Square, Triangle and Circle Towel Hangers will add approx 8mm width on each side once fitted to the radiator. **Can be fitted after installation only on high adjustment bracket fitting.**

Aluminium Range

WITHINGTON VERTICAL

For all Withington Towel Hangers, please refer to **page 239.**

Pictured 89.0142 Matt Anthracite with 86.0079 Towel Hangers x3 & 89.0170 Cover Caps x2

Pictured 89.0139 Matt White with 101.0058 Towel Hanger

An elegant aluminium radiator with clean lines which will be the centre of attention in any room. Towel hangers and chrome caps are available as an additional extras.

Warranty 5 Year | Heating | All Electric | Dual-Fuel

FEATURES

- Excellent heat conductivity and lightweight
- Heats up very quickly
- Only requires a low water volume
- Radiators come with cover caps on top and bottom, same as radiator colour. Matt Cobalt Blue radiators come with Chrome Cover Caps
- Can be single, dual fuel or all electric
- Tested to BS EN 442 standards
- 5 Year Manufacturer's Warranty*

* With conditions

Technical Tables & Drawings
Page 412-413

Aluminium Range

WITHINGTON VERTICAL

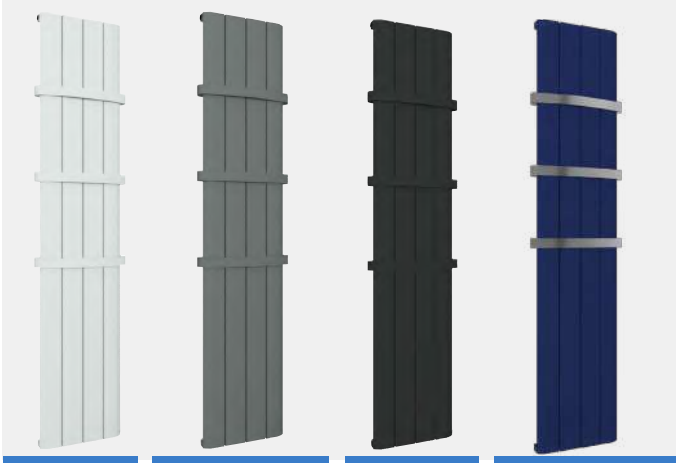

Matt White | Matt Anthracite | Matt Black | Matt Cobalt Blue

Pictured 89.0987 Matt Black

For all Withington Towel Hangers, please refer to **page 238.**

Withington Vertical Aluminium Radiators - Matt White

Size H x W	Delta △T30 Watts	Delta △T30 BTU	Delta △T50 Watts	Delta △T50 BTU	Element Output	Code	£ Ex VAT	£ Inc VAT
600 x 280mm	122	417	240	819	150W	89.0782	182.00	**218.40**
1200 x 280mm	223	761	439	1497	300W	89.0930	251.00	**301.20**
1200 x 375mm	296	1010	583	1989	300W	89.0931	323.00	**387.60**
1200 x 470mm	368	1255	724	2469	450W	89.0932	395.00	**474.00**
1200 x 565mm	440	1501	865	2950	600W	89.0933	472.00	**566.40**
1800 x 280mm	322	1099	636	2169	450W	89.0137	307.00	**368.40**
1800 x 375mm	427	1457	844	2879	600W	89.0139	397.00	**476.40**
1800 x 470mm	531	1811	1049	3578	750W	89.0141	479.00	**574.80**
1800 x 565mm	634	2162	1253	4273	1000W	89.0783	595.00	**714.00**

Withington Vertical Aluminium Radiators - Matt Anthracite

Size H x W	Delta △T30 Watts	Delta △T30 BTU	Delta △T50 Watts	Delta △T50 BTU	Element Output	Code	£ Ex VAT	£ Inc VAT
600 x 280mm	122	417	240	819	150W	89.0784	182.00	**218.40**
1200 x 280mm	223	761	439	1497	300W	89.0963	251.00	**301.20**
1200 x 375mm	296	1010	583	1989	300W	89.0964	323.00	**387.60**
1200 x 470mm	368	1255	724	2469	450W	89.0965	395.00	**474.00**
1200 x 565mm	440	1501	865	2950	600W	89.0966	472.00	**566.40**
1800 x 280mm	322	1099	636	2169	450W	89.0138	307.00	**368.40**
1800 x 375mm	427	1457	844	2879	600W	89.0140	397.00	**476.40**
1800 x 470mm	531	1811	1049	3578	750W	89.0142	479.00	**574.80**
1800 x 565mm	634	2162	1253	4273	1000W	89.0785	595.00	**714.00**

Withington Vertical Aluminium Radiators - Matt Black

Size H x W	Delta △T30 Watts	Delta △T30 BTU	Delta △T50 Watts	Delta △T50 BTU	Element Output	Code	£ Ex VAT	£ Inc VAT
600 x 280mm	122	417	240	819	150W	89.0786	182.00	**218.40**
1200 x 280mm	223	761	439	1497	300W	89.0984	251.00	**301.20**
1200 x 375mm	296	1010	583	1989	300W	89.0985	323.00	**387.60**
1200 x 470mm	368	1255	724	2469	450W	89.0986	395.00	**474.00**
1200 x 565mm	440	1501	865	2950	600W	89.0987	472.00	**566.40**
1800 x 280mm	322	1099	636	2169	450W	89.0787	307.00	**368.40**
1800 x 375mm	427	1457	844	2879	600W	89.0788	397.00	**476.40**
1800 x 470mm	531	1811	1049	3578	750W	89.0789	479.00	**574.80**
1800 x 565mm	634	2162	1253	4273	1000W	89.0790	595.00	**714.00**

Withington Vertical Aluminium Radiators - Matt Cobalt Blue

Size H x W	Delta △T30 Watts	Delta △T30 BTU	Delta △T50 Watts	Delta △T50 BTU	Element Output	Code	£ Ex VAT	£ Inc VAT
1800 x 280mm	322	1099	636	2169	450W	89.1608	307.00	**368.40**
1800 x 375mm	427	1457	844	2879	600W	89.1609	397.00	**476.40**
1800 x 470mm	531	1811	1049	3578	750W	89.1610	479.00	**574.80**

Prices include radiator and wall fixing sets, valves and accessories extra.

All Withington models shown above are compatible with Element Type A, A+, F* and G* (*only if cable goes through the wall)

TECHNICAL INFORMATION

All measurements in Height by Width. For matching valves see pages 338-353. Corrosion inhibitor must be added to the heating system and maintained. Flow diverter must only be fitted when radiator installed on central heating system. For indirect heating systems only. Tappings are the width of the rail and 33 or 53mm off the wall.

Withington Cover Cap Sets - Chrome

Description	Code	£ Ex VAT	£ Inc VAT
Cover Cap Set 280mm	89.0168	18.00	**21.60**
Cover Cap Set 375mm	89.0169	21.00	**25.20**
Cover Cap Set 470mm	89.0170	23.00	**27.60**
Cover Cap Set 565mm	89.0842	28.00	**33.60**

Cover cap sets only include cover caps for the top or bottom of the radiator.

Round Vent Caps
Page 357

For element types see pages 324-337.

Element can only be installed vertically on the right-hand or left-hand side on the bottom header. Radiators that are electric only are restricted to the heat output of the elements. Element size can be increased to full capacity of rail if using element type F or G. For dual fuel installations, element must be installed on flow side.

Aluminium Range

WITHINGTON HORIZONTAL

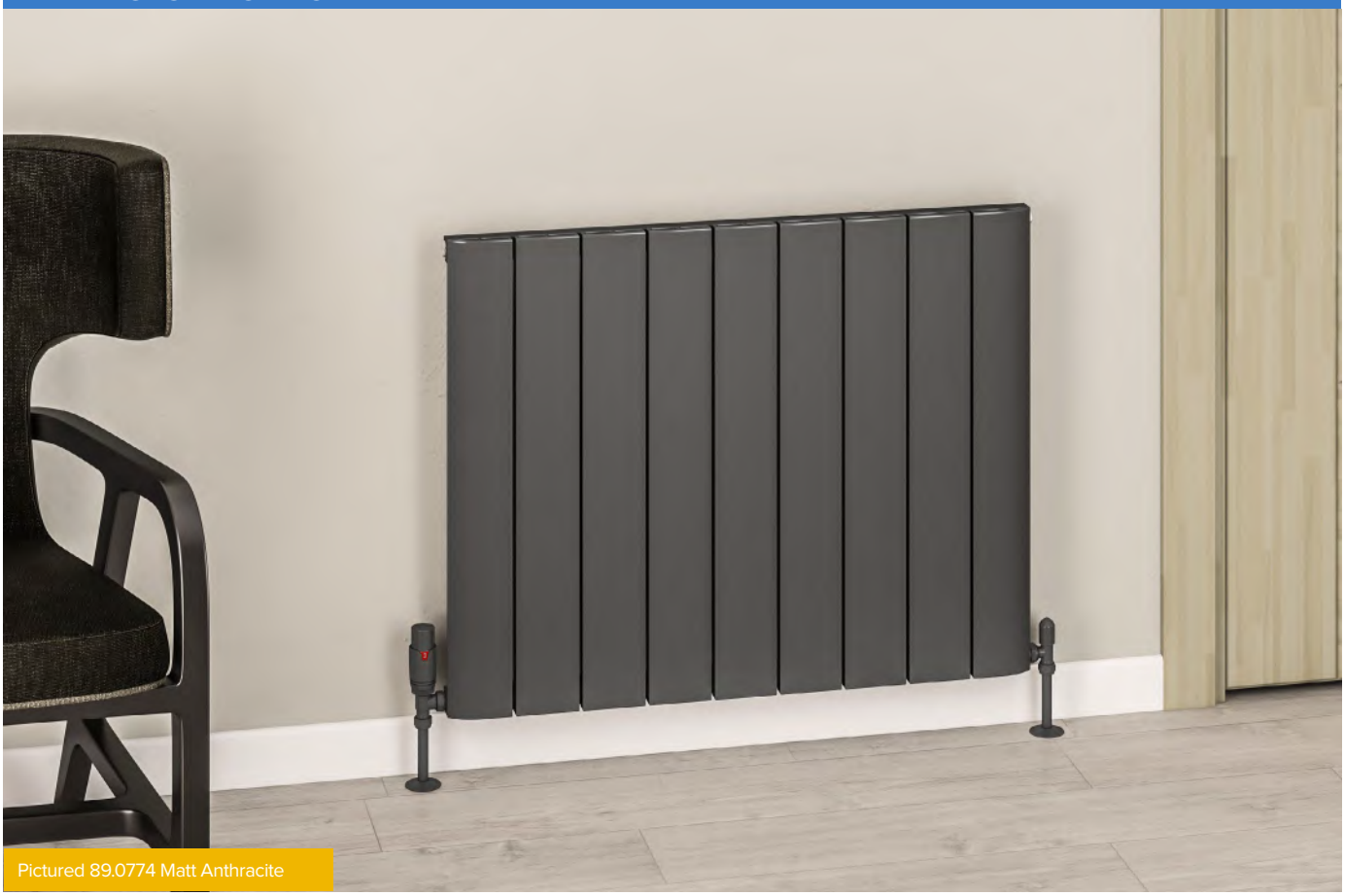

Pictured 89.0774 Matt Anthracite

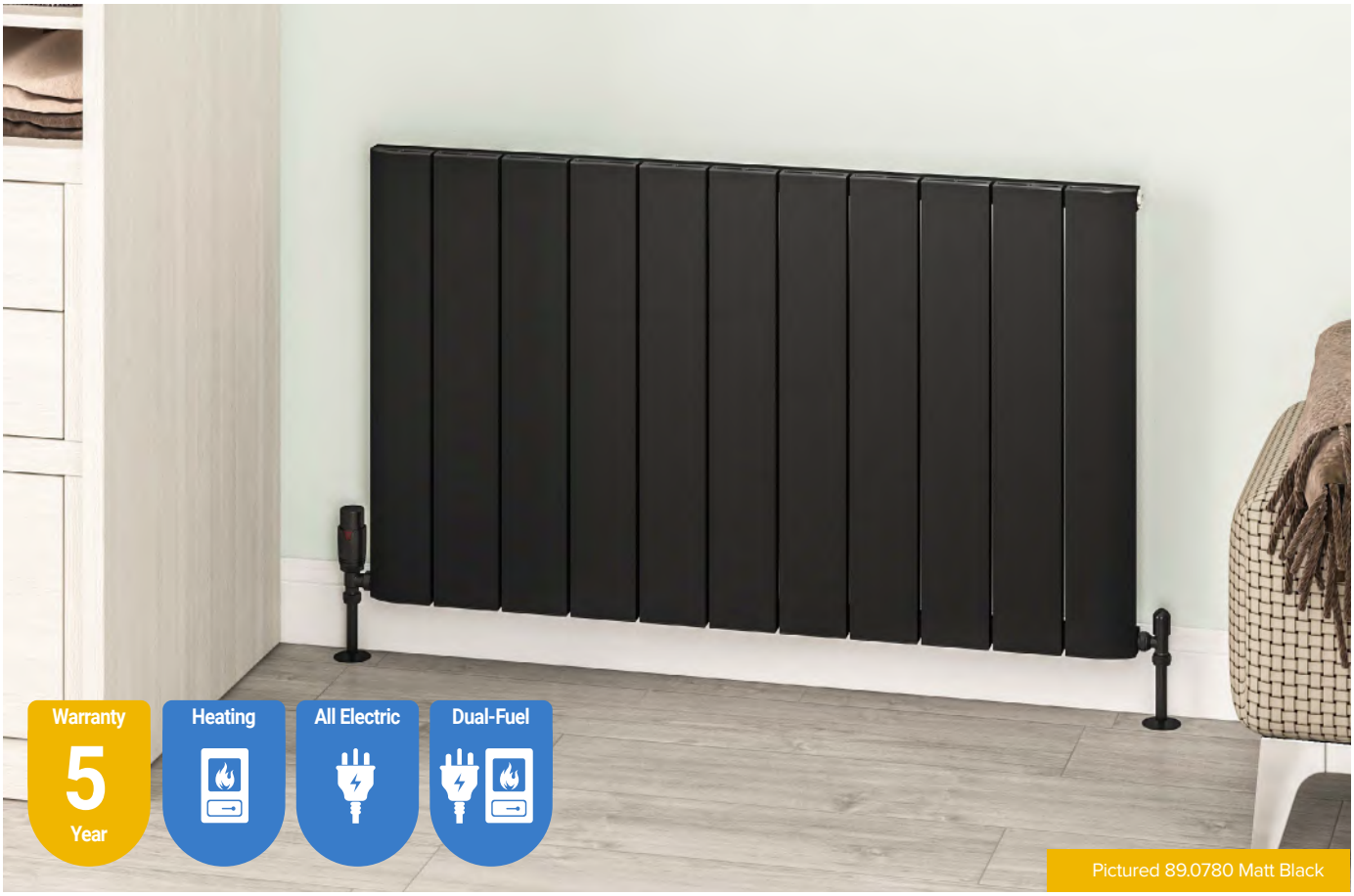

Pictured 89.0780 Matt Black

A contemporary versatile radiator style, that come in four finishes, with an optional extra of stylish towel hangers.

Aluminium Range

WITHINGTON HORIZONTAL

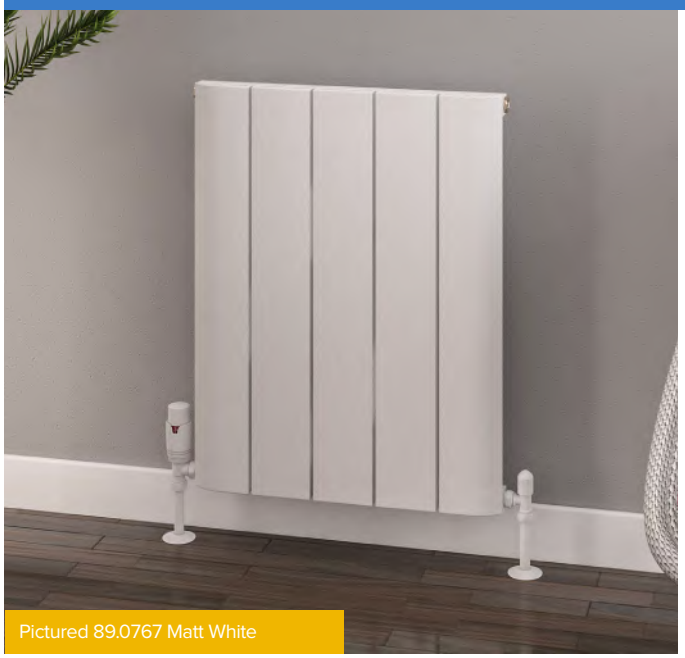

Pictured 89.0767 Matt White

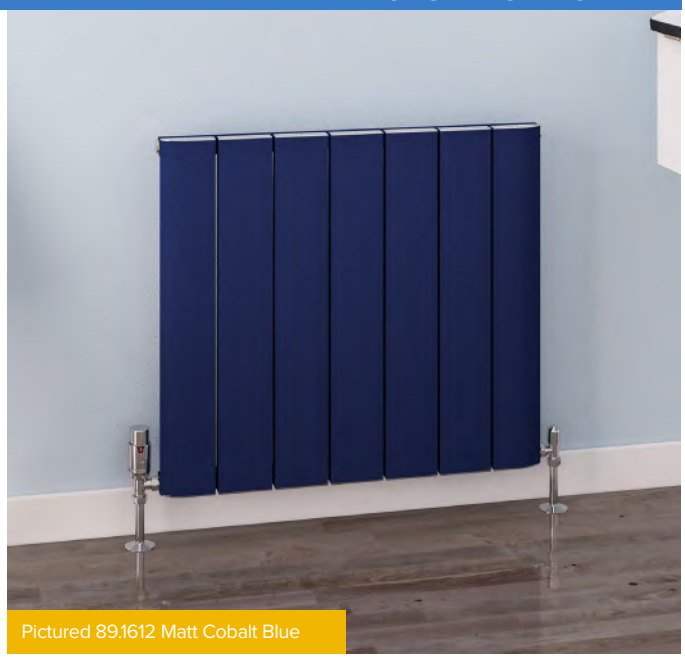

Pictured 89.1612 Matt Cobalt Blue

Withington Horizontal Aluminium Radiators - Matt White

Size H x W	Delta △T30 Watts	Delta △T30 BTU	Delta △T50 Watts	Delta △T50 BTU	Element Output	Code	£ Ex VAT	£ Inc VAT
600 x 470mm	202	689	395	1347	300W	89.0767	252.00	**302.40**
600 x 660mm	280	955	548	1869	450W	89.0768	332.00	**398.40**
600 x 850mm	358	1221	700	2387	600W	89.0769	415.00	**498.00**
600 x 1040mm	434	1480	850	2899	750W	89.0770	493.00	**591.60**
600 x 1230mm	511	1743	1000	3410	900W	89.0771	580.00	**696.00**
600 x 1420mm	587	2002	1148	3915	900W	89.0934	679.00	**814.80**

Withington Horizontal Aluminium Radiators - Matt Anthracite

Size H x W	Delta △T30 Watts	Delta △T30 BTU	Delta △T50 Watts	Delta △T50 BTU	Element Output	Code	£ Ex VAT	£ Inc VAT
600 x 470mm	202	689	395	1347	300W	89.0772	252.00	**302.40**
600 x 660mm	280	955	548	1869	450W	89.0773	332.00	**398.40**
600 x 850mm	358	1221	700	2387	600W	89.0774	415.00	**498.00**
600 x 1040mm	434	1480	850	2899	750W	89.0775	493.00	**591.60**
600 x 1230mm	511	1743	1000	3410	900W	89.0776	580.00	**696.00**
600 x 1420mm	587	2002	1148	3915	900W	89.0967	679.00	**814.80**

Withington Horizontal Aluminium Radiators - Matt Black

Size H x W	Delta △T30 Watts	Delta △T30 BTU	Delta △T50 Watts	Delta △T50 BTU	Element Output	Code	£ Ex VAT	£ Inc VAT
600 x 470mm	202	689	395	1347	300W	89.0777	252.00	**302.40**
600 x 660mm	280	955	548	1869	450W	89.0778	332.00	**398.40**
600 x 850mm	358	1221	700	2387	600W	89.0779	415.00	**498.00**
600 x 1040mm	434	1480	850	2899	750W	89.0780	493.00	**591.60**
600 x 1230mm	511	1743	1000	3410	900W	89.0781	580.00	**696.00**
600 x 1420mm	587	2002	1148	3915	900W	89.0988	679.00	**814.80**

Withington Horizontal Aluminium Radiators - Matt Cobalt Blue

Size H x W	Delta △T30 Watts	Delta △T30 BTU	Delta △T50 Watts	Delta △T50 BTU	Element Output	Code	£ Ex VAT	£ Inc VAT
600 x 470mm	202	689	395	1347	300W	89.1611	252.00	**302.40**
600 x 660mm	280	955	548	1869	450W	89.1612	332.00	**398.40**
600 x 850mm	358	1221	700	2387	600W	89.1613	415.00	**498.00**
600 x 1040mm	434	1480	850	2899	750W	89.1614	493.00	**591.60**
600 x 1230mm	511	1743	1000	3410	900W	89.1615	580.00	**696.00**

Prices include radiator and wall fixing sets, valves and accessories extra.

All Withington models shown above are compatible with Element Type A, A+, C and H

FEATURES

- Excellent heat conductivity and lightweight
- Heats up very quickly
- Only requires a low water volume
- Radiators come with cover caps on top and bottom, same as radiator colour. Matt Cobalt Blue radiators come with Chrome Cover Caps
- Can be single, dual fuel or all electric
- Tested to BS EN 442 standards
- 5 Year Manufacturer's Warranty*

* With conditions

Technical Tables & Drawings
Page 412-413

TECHNICAL INFORMATION

All measurements in Height by Width. For matching valves see pages 338-353. Corrosion inhibitor must be added to the heating system and maintained. Flow diverter must only be fitted when radiator installed on central heating system. For indirect heating systems only. Tappings are the width of the rail and 33 or 53mm off the wall.

Withington Cover Cap Sets - Chrome

Description	Code	£ Ex VAT	£ Inc VAT
Cover Cap Set 470mm	89.0170	23.00	**27.60**
Cover Cap Set 660mm	89.0843	33.00	**39.60**
Cover Cap Set 850mm	89.0844	40.00	**48.00**
Cover Cap Set 1040mm	89.0845	47.00	**56.40**
Cover Cap Set 1230mm	89.0846	56.00	**67.20**
Cover Cap Set 1420mm	89.1405	61.00	**73.20**

Cover cap sets only include cover caps for the top or bottom of the radiator.

For element types see pages 324-337.

Element can only be installed horizontally on the bottom header. Radiators that are electric only are restricted to the heat output of the elements (Type C&H up to 900 watts).

Aluminium Range

WITHINGTON STANDARD TOWEL HANGERS

Towel Hanger - Matt White

Size	Code	£ Ex VAT	£ Inc VAT
280mm	89.0186	62.00	**74.40**
375mm	89.0187	66.00	**79.20**
470mm	89.0188	74.00	**88.80**
565mm	86.0338	78.00	**93.60**

Towel Hanger - Matt Anthracite

Size	Code	£ Ex VAT	£ Inc VAT
280mm	89.0189	62.00	**74.40**
375mm	89.0190	66.00	**79.20**
470mm	89.0191	74.00	**88.80**
565mm	86.0339	78.00	**93.60**

Towel Hanger - Matt Black

Size	Code	£ Ex VAT	£ Inc VAT
280mm	89.0192	62.00	**74.40**
375mm	89.0193	66.00	**79.20**
470mm	89.0194	74.00	**88.80**
565mm	86.0340	78.00	**93.60**

Towel Hanger - Chrome

Size	Code	£ Ex VAT	£ Inc VAT
280mm	86.0077	53.00	**63.60**
375mm	86.0078	62.00	**74.40**
470mm	86.0079	69.00	**82.80**
565mm	86.0341	72.00	**86.40**

TECHNICAL INFORMATION

Material: **Steel (Premium: Stainless Steel - Grade 304)**

1800mm height radiators come with 3 pre-drilled towel hanger locations with a maximum of 3 towel hangers - all widths; 280, 375, 470 and 565mm. and 1200mm height radiators come with 2 pre-drilled towel hanger locations with a max. of 2 towel hangers. 600mm height radiators come with 1 pre-drilled towel hanger location, with a maximum of 1 towel hanger - 280mm width. The Withington Standard Towel Hangers will add approx 8mm width on each side once fitted to the radiator.

600mm height x 470mm width radiator can have one towel hanger.

Can be fitted after installation only on high adjustment bracket fitting.

Towel Hanger - Brushed Brass

Size	Code	£ Ex VAT	£ Inc VAT
280mm	41.0612	59.00	**70.80**
375mm	41.0613	68.00	**81.60**
470mm	41.0614	77.00	**92.40**
565mm	41.0615	81.00	**97.20**

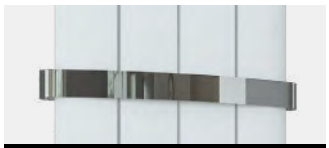

Towel Hanger - Mirror Polished Premium

Size	Code	£ Ex VAT	£ Inc VAT
280mm	86.0201	73.00	**87.60**
375mm	86.0202	80.00	**96.00**
470mm	86.0203	87.00	**104.40**
565mm	86.0342	93.00	**111.60**

WITHINGTON FLAT STYLE TOWEL HANGERS

SINGLE FLAT STYLE

Towel Hanger - Matt White

Size	Code	£ Ex VAT	£ Inc VAT
280mm	89.0283	72.00	**86.40**
375mm	89.0284	79.00	**94.80**
470mm	89.0285	89.00	**106.80**
565mm	91.0163	95.00	**114.00**
660mm	89.0286	100.00	**120.00**
850mm	89.0287	112.00	**134.40**

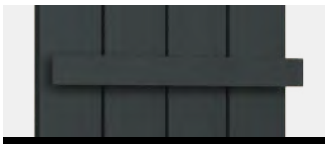

Towel Hanger - Matt Anthracite

Size	Code	£ Ex VAT	£ Inc VAT
280mm	89.0288	72.00	**86.40**
375mm	89.0289	79.00	**94.80**
470mm	89.0290	89.00	**106.80**
565mm	91.0164	95.00	**114.00**
660mm	89.0291	100.00	**120.00**
850mm	89.0292	112.00	**134.40**

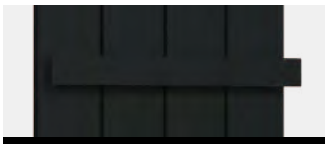

Towel Hanger - Matt Black

Size	Code	£ Ex VAT	£ Inc VAT
280mm	89.0293	72.00	**86.40**
375mm	89.0294	79.00	**94.80**
470mm	89.0295	89.00	**106.80**
565mm	91.0165	95.00	**114.00**
660mm	89.0296	100.00	**120.00**
850mm	89.0297	112.00	**134.40**

Towel Hanger - Chrome

Size	Code	£ Ex VAT	£ Inc VAT
280mm	91.0094	98.00	**117.60**
375mm	91.0095	100.00	**120.00**
470mm	91.0096	102.00	**122.40**
565mm	91.0166	103.00	**123.60**
660mm	91.0097	108.00	**129.60**
850mm	91.0098	115.00	**138.00**

DOUBLE FLAT STYLE

Towel Hanger - Matt White

Size	Code	£ Ex VAT	£ Inc VAT
280mm	89.0369	88.00	**105.60**
375mm	89.0370	92.00	**110.40**
470mm	89.0371	103.00	**123.60**
565mm	91.0167	114.00	**136.80**
660mm	89.0372	121.00	**145.20**
850mm	89.0373	135.00	**162.00**

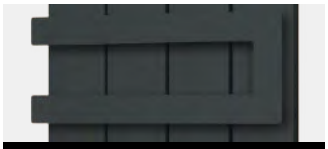

Towel Hanger - Matt Anthracite

Size	Code	£ Ex VAT	£ Inc VAT
280mm	89.0374	88.00	**105.60**
375mm	89.0375	92.00	**110.40**
470mm	89.0376	103.00	**123.60**
565mm	91.0168	114.00	**136.80**
660mm	89.0377	121.00	**145.20**
850mm	89.0378	135.00	**162.00**

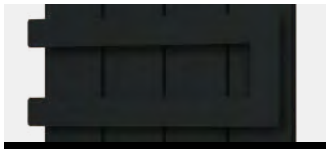

Towel Hanger - Matt Black

Size	Code	£ Ex VAT	£ Inc VAT
280mm	89.0379	88.00	**105.60**
375mm	89.0380	92.00	**110.40**
470mm	89.0381	103.00	**123.60**
565mm	91.0169	114.00	**136.80**
660mm	89.0382	121.00	**145.20**
850mm	89.0383	135.00	**162.00**

Towel Hanger - Chrome

Size	Code	£ Ex VAT	£ Inc VAT
280mm	91.0114	124.00	**148.80**
375mm	91.0115	130.00	**156.00**
470mm	91.0116	132.00	**158.40**
565mm	91.0170	138.00	**165.60**
660mm	91.0117	142.00	**170.40**
850mm	91.0118	154.00	**184.80**

TECHNICAL INFORMATION

Material: **Steel**

Vertical and Horizontal Radiators:

Flat & Double Flat Style Hangers are compatible with both Vertical and Horizontal radiators.(Depending on the radiators and hangers width)

Must be fitted before installation!

Hanger Fitting Widths
96/191/286/381/476/666mm

Hanger Fitting Widths
96/191/286/381/476/666mm

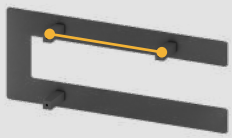

Aluminium Range

WITHINGTON FLAT TRIPLE TOWEL HANGERS

Brushed Stainless Steel

Polished Stainless Steel

Flat Triple Hanger - Brushed Stainless Steel

Size	Code	£ Ex VAT	£ Inc VAT
280mm	101.0048	240.00	**288.00**
375mm	101.0049	261.00	**313.20**
470mm	101.0050	299.00	**358.80**
565mm	101.0064	335.00	**402.00**

Flat Triple Hanger - Polished Stainless Steel

Size	Code	£ Ex VAT	£ Inc VAT
280mm	101.0054	240.00	**288.00**
375mm	101.0055	261.00	**313.20**
470mm	101.0056	299.00	**358.80**
565mm	101.0065	335.00	**402.00**

WITHINGTON CURVED TRIPLE T.HANGERS

Brushed Stainless Steel

Polished Stainless Steel

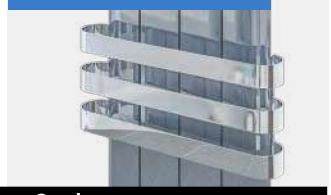

Curved Triple Hanger - Brushed Stainless Steel

Size	Code	£ Ex VAT	£ Inc VAT
280mm	101.0051	240.00	**288.00**
375mm	101.0052	261.00	**313.20**
470mm	101.0053	299.00	**358.80**
565mm	101.0066	335.00	**402.00**

Curved Triple Hanger - Polished Stainless Steel

Size	Code	£ Ex VAT	£ Inc VAT
280mm	101.0057	240.00	**288.00**
375mm	101.0058	261.00	**313.20**
470mm	101.0059	299.00	**358.80**
565mm	101.0067	335.00	**402.00**

TECHNICAL INFORMATION

Material: **Stainless Steel - Grade 304**

Vertical Radiators:

1800mm height radiators comes with 3 pre-drilled towel hanger locations. 600mm height radiators come with 1 pre-drilled towel hanger location. The flat triple & curved triple towel hangers are only compatible with the Vertical Radiators and can be fitted to the pre-drilled holes on 1800mm & 600mm height radiators. **Can be fitted after installation only on high adjustment bracket fitting.**

Horizontal Radiators:

The flat triple & curved triple towel hangers are not suitable for horizontal radiators.

WITHINGTON DESIGNER TOWEL HANGERS

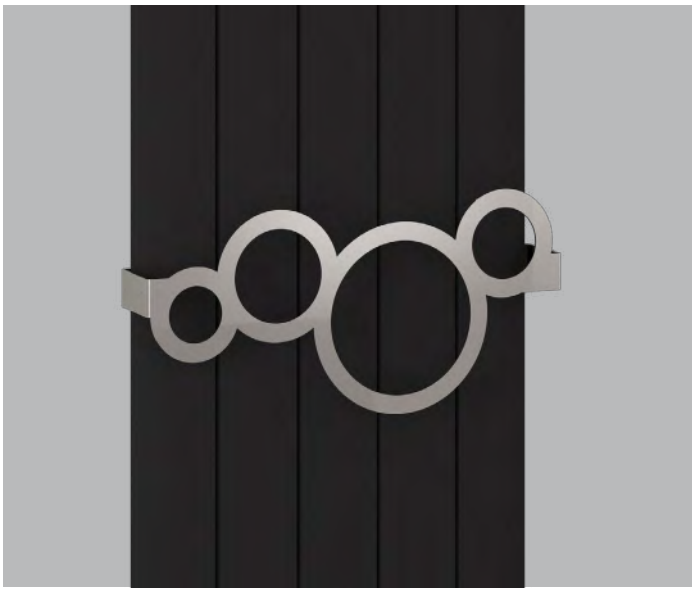

Square Style

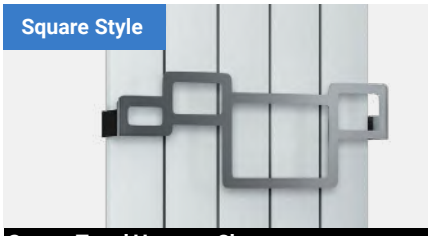

Square Towel Hanger - Chrome

Size	Code	£ Ex VAT	£ Inc VAT
375mm	101.0084	83.00	**99.60**
470mm	101.0085	96.00	**115.20**
565mm	101.0086	112.00	**134.40**

Circle Style

Circle Towel Hanger - Chrome

Size	Code	£ Ex VAT	£ Inc VAT
375mm	101.0108	84.00	**100.80**
470mm	101.0109	98.00	**117.60**
565mm	101.0110	116.00	**139.20**

TECHNICAL INFORMATION

Material: **Steel**

Square, Triangle and Circle Towel Hangers are only compatible with vertical radiators and can be fitted to one of the three pre-drilled holes on the 1800mm height radiators and to one of the two pre-drilled holes of the 1200mm height radiators. Square, Triangle and Circle Towel Hangers will add approx 8mm width on each side once fitted to the radiator. **Can be fitted after installation only on high adjustment bracket fitting.**

Aluminium Range

MALMESBURY VERTICAL

Pictured 89.0148 Matt White

An aluminium radiator range available in both Vertical and Horizontal designs in Matt White, Matt Anthracite, Matt Cappuccino, Matt Grey or Matt Black finishes. Optional extras include chrome cover caps and towel hangers.

FEATURES

- Excellent heat conductivity and lightweight
- Only requires a low water volume
- Heats up very quickly
- Radiators come with cover caps on top and bottom, same as radiator colour
- Can be single, dual fuel or all electric
- Tested to BS EN 442 standards
- 5 Year Manufacturer's Warranty*

* With conditions

Pictured 89.0279 Matt Grey with 89.0301 Towel Hangers

Aluminium Range

MALMESBURY VERTICAL

Malmesbury Vertical Aluminium Radiators - Matt White

Size H x W	Delta △T30 Watts	Delta △T30 BTU	Delta △T50 Watts	Delta △T50 BTU	Element Output	Code	£ Ex VAT	£ Inc VAT
1200 x 185mm	153	522	296	1010	150W	89.0935	187.00	**224.40**
1200 x 280mm	226	771	437	1491	300W	89.0936	266.00	**319.20**
1200 x 375mm	297	1013	576	1965	300W	89.0937	343.00	**411.60**
1200 x 470mm	368	1255	713	2432	450W	89.0938	418.00	**501.60**
1200 x 565mm	437	1491	848	2892	600W	89.0939	500.00	**600.00**
1800 x 185mm	220	751	429	1463	300W	89.0277	231.00	**277.20**
1800 x 280mm	325	1109	634	2162	450W	89.0146	327.00	**392.40**
1800 x 375mm	428	1460	835	2848	600W	89.0148	416.00	**499.20**
1800 x 470mm	530	1808	1033	3523	750W	89.0150	509.00	**610.80**
1800 x 565mm	630	2149	1229	4191	1000W	89.0739	613.00	**735.60**

Malmesbury Vertical Aluminium Radiators - Matt Grey

Size H x W	Delta △T30 Watts	Delta △T30 BTU	Delta △T50 Watts	Delta △T50 BTU	Element Output	Code	£ Ex VAT	£ Inc VAT
1200 x 185mm	153	522	296	1010	150W	89.0946	187.00	**224.40**
1200 x 280mm	226	771	437	1491	300W	89.0947	266.00	**319.20**
1200 x 375mm	297	1013	576	1965	300W	89.0948	343.00	**411.60**
1200 x 470mm	368	1255	713	2432	450W	89.0949	418.00	**501.60**
1200 x 565mm	437	1491	848	2892	600W	89.0950	500.00	**600.00**
1800 x 185mm	220	751	429	1463	300W	89.0279	231.00	**277.20**
1800 x 280mm	325	1109	634	2162	450W	89.0280	327.00	**392.40**
1800 x 375mm	428	1460	835	2848	600W	89.0281	416.00	**499.20**
1800 x 470mm	530	1808	1033	3523	750W	89.0282	509.00	**610.80**
1800 x 565mm	630	2149	1229	4191	1000W	89.0740	613.00	**735.60**

Malmesbury Vertical Aluminium Radiators - Matt Anthracite

Size H x W	Delta △T30 Watts	Delta △T30 BTU	Delta △T50 Watts	Delta △T50 BTU	Element Output	Code	£ Ex VAT	£ Inc VAT
1200 x 185mm	153	522	296	1010	150W	89.0968	187.00	**224.40**
1200 x 280mm	226	771	437	1491	300W	89.0969	266.00	**319.20**
1200 x 375mm	297	1013	576	1965	300W	89.0970	343.00	**411.60**
1200 x 470mm	368	1255	713	2432	450W	89.0971	418.00	**501.60**
1200 x 565mm	437	1491	848	2892	600W	89.0972	500.00	**600.00**
1800 x 185mm	220	751	429	1463	300W	89.0278	231.00	**277.20**
1800 x 280mm	325	1109	634	2162	450W	89.0147	327.00	**392.40**
1800 x 375mm	428	1460	835	2848	600W	89.0149	416.00	**499.20**
1800 x 470mm	530	1808	1033	3523	750W	89.0151	509.00	**610.80**
1800 x 565mm	630	2149	1229	4191	1000W	89.0742	613.00	**735.60**

Malmesbury Vertical Aluminium Radiators - Matt Cappuccino

Size H x W	Delta △T30 Watts	Delta △T30 BTU	Delta △T50 Watts	Delta △T50 BTU	Element Output	Code	£ Ex VAT	£ Inc VAT
1200 x 185mm	153	522	296	1010	150W	89.0952	187.00	**224.40**
1200 x 280mm	226	771	437	1491	300W	89.0953	266.00	**319.20**
1200 x 375mm	297	1013	576	1965	300W	89.0954	343.00	**411.60**
1200 x 470mm	368	1255	713	2432	450W	89.0955	418.00	**501.60**
1200 x 565mm	437	1491	848	2892	600W	89.0956	500.00	**600.00**
1800 x 185mm	220	751	429	1463	300W	89.0477	257.00	**308.40**
1800 x 280mm	325	1109	634	2162	450W	89.0478	363.00	**435.60**
1800 x 375mm	428	1460	835	2848	600W	89.0479	467.00	**560.40**
1800 x 470mm	530	1808	1033	3523	750W	89.0480	571.00	**685.20**
1800 x 565mm	630	2149	1229	4191	1000W	89.0741	675.00	**810.00**

Malmesbury Vertical Aluminium Radiators - Matt Black

Size H x W	Delta △T30 Watts	Delta △T30 BTU	Delta △T50 Watts	Delta △T50 BTU	Element Output	Code	£ Ex VAT	£ Inc VAT
1800 x 185mm	153	522	296	1010	300W	89.1753	231.00	**277.20**
1800 x 280mm	226	771	437	1491	450W	89.1754	327.00	**392.40**
1800 x 375mm	297	1013	576	1965	600W	89.1755	416.00	**499.20**
1800 x 470mm	368	1255	713	2432	750W	89.1756	509.00	**610.80**
1800 x 565mm	437	1491	848	2892	1000W	89.1757	613.00	**735.60**

Prices include radiator and wall fixing sets, valves and accessories extra.

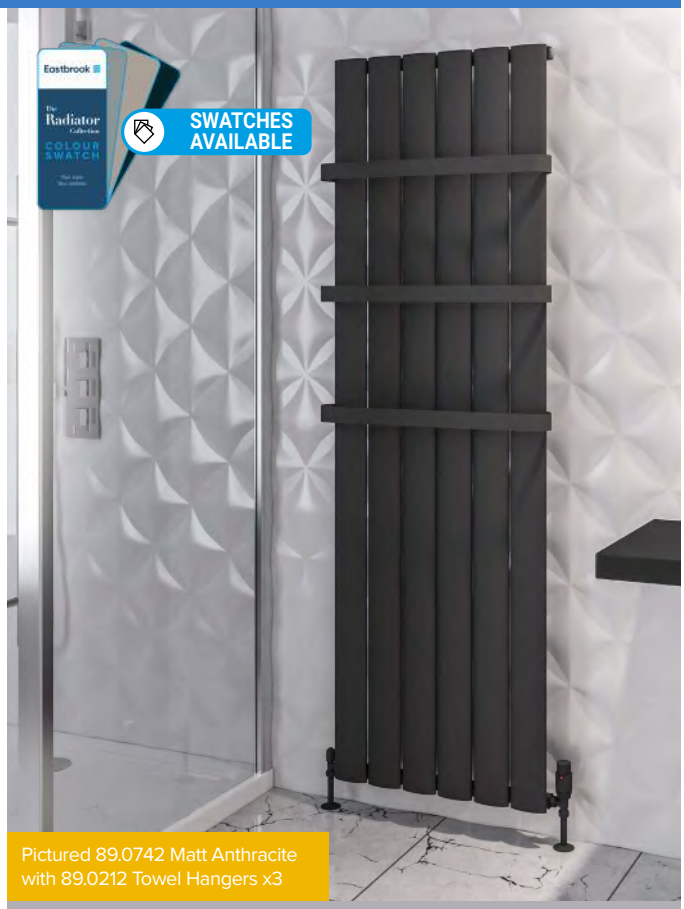

Pictured 89.0742 Matt Anthracite with 89.0212 Towel Hangers x3

For all Malmesbury Matt White, Matt Anthracite, Matt Cappuccino, Matt Grey, Matt Black & Chrome Towel Hangers, please refer to **page 245.**

All Malmesbury models shown above are compatible with Element Type A, A+, F* and G* (*only if cable goes through the wall)

TECHNICAL INFORMATION

All measurements in Height by Width. For matching valves see pages 338-353. Corrosion inhibitor must be added to the heating system and maintained. Flow diverter must only be fitted when radiator installed on central heating system. For indirect heating systems only. Tappings are the width of the rail and 33 or 53mm off the wall.

For element types see pages 324-337.

Element can only be installed vertically on the right-hand or left-hand side on the bottom header. Radiators that are electric only are restricted to the heat output of the elements. Element size can be increased to full capacity of rail if using element type F or G. For dual fuel installations, element must be installed on flow side.

Malmesbury Cover Caps - Chrome

Description	Code	£ Ex VAT	£ Inc VAT
Cover Cap Set 185mm	89.0422	19.00	**22.80**
Cover Cap Set 280mm	89.0171	19.00	**22.80**
Cover Cap Set 375mm	89.0172	21.00	**25.20**
Cover Cap Set 470mm	89.0173	24.00	**28.80**
Cover Cap Set 565mm	89.0174	28.00	**33.60**

Cover cap sets only include cover caps for the top or bottom of the radiator.

Aluminium Range

MALMESBURY VERTICAL - PREMIUM

Pictured 89.1778 Black Effect

Technical Tables & Drawings
Page 412-413

Malmesbury Aluminium Radiators combine sleek, modern design with exceptional durability. Finished using advanced plasma technology painting, they offer a flawless, long-lasting surface that resists wear and maintains its vibrant look for years. A perfect blend of performance and style, these radiators make a striking statement in any space.

FEATURES

- Excellent heat conductivity and lightweight
- Only requires a low water volume
- Heats up very quickly
- Radiators come with cover caps on top and bottom, same as radiator colour
- Can be single, dual fuel or all electric
- Tested to BS EN 442 standards
- 5 Year Manufacturer's Warranty*

* With conditions

Premium Plasma Colours

Our new Plasma Colour radiators bring a bold, modern aesthetic to your space with a sleek, gloss finish. Designed for both durability, and an eco-friendly solution with a vibrant look.

Brass Effect

Silver Effect

Black Effect

Aluminium Range

MALMESBURY VERTICAL - PREMIUM

Malmesbury Vertical Aluminium Radiators - Brass Effect

Size H x W	Delta △T30 Watts	Delta △T30 BTU	Delta △T50 Watts	Delta △T50 BTU	Element Output	Code	£ Ex VAT	£ Inc VAT
1800 x 280mm	325	1109	634	2162	450W	89.1768	392.00	**470.40**
1800 x 375mm	428	1460	835	2848	600W	89.1769	503.00	**603.60**
1800 x 470mm	530	1808	1033	3523	750W	89.1770	615.00	**738.00**
1800 x 565mm	630	2149	1229	4191	1000W	89.1771	738.00	**885.60**

Malmesbury Vertical Aluminium Radiators - Silver Effect

Size H x W	Delta △T30 Watts	Delta △T30 BTU	Delta △T50 Watts	Delta △T50 BTU	Element Output	Code	£ Ex VAT	£ Inc VAT
1800 x 280mm	325	1109	634	2162	450W	89.1772	392.00	**470.40**
1800 x 375mm	428	1460	835	2848	600W	89.1773	503.00	**603.60**
1800 x 470mm	530	1808	1033	3523	750W	89.1774	615.00	**738.00**
1800 x 565mm	630	2149	1229	4191	1000W	89.1775	738.00	**885.60**

Malmesbury Vertical Aluminium Radiators - Black Effect

Size H x W	Delta △T30 Watts	Delta △T30 BTU	Delta △T50 Watts	Delta △T50 BTU	Element Output	Code	£ Ex VAT	£ Inc VAT
1800 x 280mm	325	1109	634	2162	450W	89.1776	392.00	**470.40**
1800 x 375mm	428	1460	835	2848	600W	89.1777	503.00	**603.60**
1800 x 470mm	530	1808	1033	3523	750W	89.1778	615.00	**738.00**
1800 x 565mm	630	2149	1229	4191	1000W	89.1779	738.00	**885.60**

Prices include radiator and wall fixing sets, valves and accessories extra.

All Malmesbury models shown above are compatible with Element Type A, A+, F* and G* (*only if cable goes through the wall)

TECHNICAL INFORMATION

All measurements in Height by Width. For matching valves see pages 338-353. Corrosion inhibitor must be added to the heating system and maintained. Flow diverter must only be fitted when radiator installed on central heating system. For indirect heating systems only. Tappings are the width of the rail and 33 or 53mm off the wall.

For element types see pages 324-337.

Element can only be installed vertically on the right-hand or left-hand side on the bottom header. Radiators that are electric only are restricted to the heat output of the elements. Element size can be increased to full capacity of rail if using element type F or G. For dual fuel installations, element must be installed on flow side.

Malmesbury Cover Caps - Chrome

Description	Code	£ Ex VAT	£ Inc VAT
Cover Cap Set 280mm	89.0171	19.00	**22.80**
Cover Cap Set 375mm	89.0172	21.00	**25.20**
Cover Cap Set 470mm	89.0173	24.00	**28.80**
Cover Cap Set 565mm	89.0174	28.00	**33.60**

Cover cap sets only include cover caps for the top or bottom of the radiator.

Pictured 89.1773 Silver Effect with 89.0159 Towel Hangers x 3

Pictured 89.1771 Brass Effect

Aluminium Range

MALMESBURY HORIZONTAL

Warranty 5 Year | Heating | All Electric | Dual-Fuel

Pictured 89.0425 Matt White

An aluminium radiator range available in both Vertical and Horizontal designs in Matt White, Matt Anthracite, Matt Cappuccino, Matt Grey or Matt Black finishes. Optional extras include chrome cover caps and towel hangers.

500mm Height

Malmesbury Horizontal Aluminium Radiators - Matt White

Size H x W	Delta △T30 Watts	Delta △T30 BTU	Delta △T50 Watts	Delta △T50 BTU	Element Output	Code	£ Ex VAT	£ Inc VAT
500 x 375mm	140	478	269	918	150W	89.0432	195.00	**234.00**
500 x 470mm	173	590	333	1136	150W	89.0433	242.00	**290.40**
500 x 565mm	205	700	396	1351	300W	89.0434	285.00	**342.00**

Malmesbury Horizontal Aluminium Radiators - Matt Grey

Size H x W	Delta △T30 Watts	Delta △T30 BTU	Delta △T50 Watts	Delta △T50 BTU	Element Output	Code	£ Ex VAT	£ Inc VAT
500 x 375mm	140	478	269	918	150W	89.0435	195.00	**234.00**
500 x 470mm	173	590	333	1136	150W	89.0436	242.00	**290.40**
500 x 565mm	205	700	396	1351	300W	89.0437	285.00	**342.00**

Malmesbury Horizontal Aluminium Radiators - Matt Anthracite

Size H x W	Delta △T30 Watts	Delta △T30 BTU	Delta △T50 Watts	Delta △T50 BTU	Element Output	Code	£ Ex VAT	£ Inc VAT
500 x 375mm	140	478	269	918	150W	89.0438	195.00	**234.00**
500 x 470mm	173	590	333	1136	150W	89.0439	242.00	**290.40**
500 x 565mm	205	700	396	1351	300W	89.0440	285.00	**342.00**

- Excellent heat conductivity and lightweight
- Only requires a low water volume
- Heats up very quickly
- Radiators come with cover caps on top and bottom, same as radiator colour.
- Can be single, dual fuel or all electric
- Tested to BS EN 442 standards
- 5 Year Manufacturer's Warranty*

* With conditions

Technical Tables & Drawings
Page 412-413

TECHNICAL INFORMATION

All measurements in Height by Width. For matching valves see pages 338-353. Corrosion inhibitor must be added to the heating system and maintained. Flow diverter must only be fitted when radiator installed on central heating system. For indirect heating systems only. Tappings are the width of the rail and 33 or 53mm off the wall. Price includes radiator and wall fixing sets, valves extra.

All Malmesbury models shown above are compatible with Element Type A, A+, C and H

600mm Height

Malmesbury Horizontal Aluminium Radiators - Matt White

Size H x W	Delta △T30 Watts	Delta △T30 BTU	Delta △T50 Watts	Delta △T50 BTU	Element Output	Code	£ Ex VAT	£ Inc VAT
600 x 375mm	163	556	314	1071	150W	89.0152	210.00	**252.00**
600 x 470mm	202	689	389	1327	300W	89.0154	261.00	**313.20**
600 x 565mm	240	819	462	1576	300W	89.0156	307.00	**368.40**
600 x 850mm	352	1201	680	2319	450W	89.0423	436.00	**523.20**
600 x 1040mm	426	1453	822	2804	600W	89.0424	530.00	**636.00**
600 x 1230mm	499	1702	963	3284	750W	89.0425	627.00	**752.40**
600 x 1420mm	572	1951	1103	3762	900W	89.0940	780.00	**936.00**

Malmesbury Horizontal Aluminium Radiators - Matt Grey

Size H x W	Delta △T30 Watts	Delta △T30 BTU	Delta △T50 Watts	Delta △T50 BTU	Element Output	Code	£ Ex VAT	£ Inc VAT
600 x 375mm	163	556	314	1071	150W	89.0274	210.00	**252.00**
600 x 470mm	202	689	389	1327	300W	89.0275	261.00	**313.20**
600 x 565mm	240	819	462	1576	300W	89.0276	307.00	**368.40**
600 x 850mm	352	1201	680	2319	450W	89.0426	436.00	**523.20**
600 x 1040mm	426	1453	822	2804	600W	89.0427	530.00	**636.00**
600 x 1230mm	499	1702	963	3284	750W	89.0428	627.00	**752.40**
600 x 1420mm	572	1951	1103	3762	900W	89.0951	780.00	**936.00**

Malmesbury Horizontal Aluminium Radiators - Matt Anthracite

Size H x W	Delta △T30 Watts	Delta △T30 BTU	Delta △T50 Watts	Delta △T50 BTU	Element Output	Code	£ Ex VAT	£ Inc VAT
600 x 375mm	163	556	314	1071	150W	89.0153	210.00	**252.00**
600 x 470mm	202	689	389	1327	300W	89.0155	261.00	**313.20**
600 x 565mm	240	819	462	1576	300W	89.0157	307.00	**368.40**
600 x 850mm	352	1201	680	2319	450W	89.0429	436.00	**523.20**
600 x 1040mm	426	1453	822	2804	600W	89.0430	530.00	**636.00**
600 x 1230mm	499	1702	963	3284	750W	89.0431	627.00	**752.40**
600 x 1420mm	572	1951	1103	3762	900W	89.0973	780.00	**936.00**

Malmesbury Horizontal Aluminium Radiators - Matt Cappuccino

Size H x W	Delta △T30 Watts	Delta △T30 BTU	Delta △T50 Watts	Delta △T50 BTU	Element Output	Code	£ Ex VAT	£ Inc VAT
600 x 375mm	163	556	314	1071	150W	89.0481	237.00	**284.40**
600 x 470mm	202	689	389	1327	300W	89.0482	294.00	**352.80**
600 x 565mm	240	819	462	1576	300W	89.0483	344.00	**412.80**
600 x 850mm	352	1201	680	2319	450W	89.0484	513.00	**615.60**
600 x 1040mm	426	1453	822	2804	600W	89.0485	623.00	**747.60**
600 x 1230mm	499	1702	963	3284	750W	89.0486	738.00	**885.60**
600 x 1420mm	572	1951	1103	3762	900W	89.0957	780.00	**936.00**

Prices include radiator and wall fixing sets, valves and accessories extra.

Malmesbury Cover Caps - Chrome

Description	Code	£ Ex VAT	£ Inc VAT
Cover Cap Set 375mm	89.0172	21.00	**25.20**
Cover Cap Set 470mm	89.0173	24.00	**28.80**
Cover Cap Set 565mm	89.0174	28.00	**33.60**
Cover Cap Set 850mm	89.0497	37.00	**44.40**
Cover Cap Set 1040mm	89.0498	44.00	**52.80**
Cover Cap Set 1230mm	89.0499	50.00	**60.00**
Cover Cap Set 1420mm	89.1406	55.00	**66.00**

Cover cap sets only include cover caps for the top or bottom of the radiator.

Element can only be installed horizontally on the bottom header. Radiators that are electric only are restricted to the heat output of the elements (Type C&H can be increased up to full capacity of 900 watts).

Aluminium Range

MALMESBURY STANDARD TOWEL HANGERS

Towel Hanger - Matt White

Size	Code	£ Ex VAT	£ Inc VAT
185mm	89.0298	47.00	**56.40**
280mm	89.0215	56.00	**67.20**
375mm	89.0207	63.00	**75.60**
470mm	89.0208	72.00	**86.40**
565mm	89.0209	76.00	**91.20**

Towel Hanger - Matt Grey

Size	Code	£ Ex VAT	£ Inc VAT
185mm	89.0300	47.00	**56.40**
280mm	89.0302	56.00	**67.20**
375mm	89.0303	63.00	**75.60**
470mm	89.0304	72.00	**86.40**
565mm	89.0305	76.00	**91.20**

Towel Hanger - Matt Anthracite

Size	Code	£ Ex VAT	£ Inc VAT
185mm	89.0299	47.00	**56.40**
280mm	89.0216	56.00	**67.20**
375mm	89.0210	63.00	**75.60**
470mm	89.0211	72.00	**86.40**
565mm	89.0212	76.00	**91.20**

Towel Hanger - Matt Cappuccino

Size	Code	£ Ex VAT	£ Inc VAT
185mm	89.0487	47.00	**56.40**
280mm	89.0488	56.00	**67.20**
375mm	89.0489	63.00	**75.60**
470mm	89.0490	72.00	**86.40**
565mm	89.0491	76.00	**91.20**

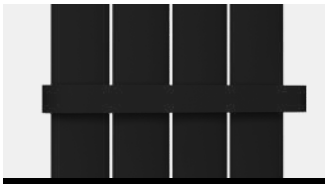

Towel Hanger - Matt Black

Size	Code	£ Ex VAT	£ Inc VAT
185mm	89.1758	47.00	**56.40**
280mm	89.1759	56.00	**67.20**
375mm	89.1760	63.00	**75.60**
470mm	89.1761	72.00	**86.40**
565mm	89.1762	76.00	**91.20**

Towel Hanger - Chrome

Size	Code	£ Ex VAT	£ Inc VAT
185mm	89.0301	47.00	**56.40**
280mm	89.0158	53.00	**63.60**
375mm	89.0159	56.00	**67.20**
470mm	89.0160	65.00	**78.00**
565mm	89.0176	70.00	**84.00**

Pictured 89.0439 Matt Anthracite with 89.0160 Towel Hanger

TECHNICAL INFORMATION

Material: **Steel**

Vertical Radiators:

1200mm radiators come with 2 pre-drilled towel hanger locations with a maximum of 2 towel hangers and 1800mm height radiators come with 3 pre-drilled towel hanger locations with a maximum of 3 towel hangers - all widths; 185, 280, 375, 470 and 565mm. The standard towel hangers are only compatible with the Vertical Radiators.

Can be fitted after installation only on high adjustment bracket fitting.

Horizontal Radiators:

500mm & 600mm height radiators come with 1 pre-drilled towel hanger location, with a maximum of 1 towel hanger - (only 375, 470 and 565mm widths).

Standard towel hanger can be fitted.

Can be fitted after installation only on high adjustment bracket fitting.

The Malmesbury Standard Towel Hangers will add approx 22mm width on each side once fitted to the radiator.

MALMESBURY FLAT STYLE TOWEL HANGERS

SINGLE FLAT STYLE

Towel Hanger - Matt White

Size	Code	£ Ex VAT	£ Inc VAT
280mm	89.0306	83.00	**99.60**
375mm	89.0307	89.00	**106.80**
470mm	89.0308	92.00	**110.40**
565mm	89.0309	116.00	**139.20**

Towel Hanger - Matt Grey

Size	Code	£ Ex VAT	£ Inc VAT
280mm	89.0314	83.00	**99.60**
375mm	89.0315	89.00	**106.80**
470mm	89.0316	92.00	**110.40**
565mm	89.0317	116.00	**139.20**

Towel Hanger - Matt Anthracite

Size	Code	£ Ex VAT	£ Inc VAT
280mm	89.0310	83.00	**99.60**
375mm	89.0311	89.00	**106.80**
470mm	89.0312	92.00	**110.40**
565mm	89.0313	116.00	**139.20**

Towel Hanger - Matt Cappuccino

Size	Code	£ Ex VAT	£ Inc VAT
280mm	89.0492	90.00	**108.00**
375mm	89.0493	98.00	**117.60**
470mm	89.0494	102.00	**122.40**
565mm	89.0495	128.00	**153.60**

TECHNICAL INFORMATION

Material: **Steel**

Vertical and Horizontal Radiators:

Single Flat style hangers are compatible with both Vertical and Horizontal radiators. (Depending on the radiators and hangers width)

Must be fitted before installation!

Hanger Fitting Widths
96/191/286/476mm

Aluminium Range

BERKELEY

Pictured 89.0712 Matt White

Matt White

Pictured 89.0724 Matt Grey

Matt Grey

Aluminium Range

BERKELEY

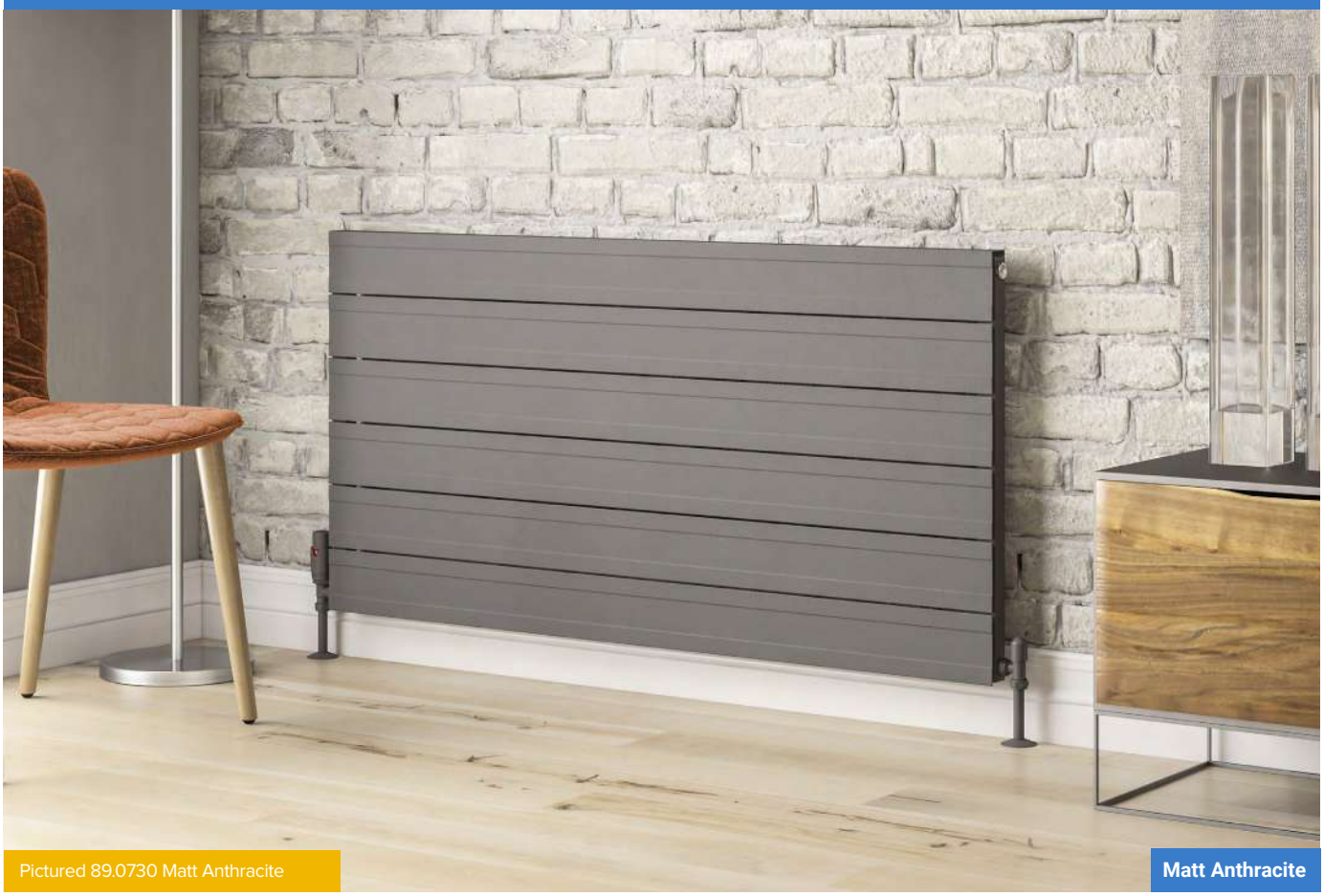

Pictured 89.0730 Matt Anthracite

Matt Anthracite

Horizontally positioned sleek and futuristic panels combined to create the radiator that will create an elegant look in every room it will be installed. When you are bored with the standard, old fashioned single panel radiators, just replace with a brand new Berkeley aluminium radiator, the perfect alternative for single panel radiators.

FEATURES

- Perfect alternative for Single Panel (Type11) Radiators
- Only requires a low water volume
- Heats up very quickly
- Tested to BS EN 442 standards
- 5 Year Manufacturer's Warranty*
- Not suitable for elements

* With conditions

Technical Tables & Drawings
Page 414-415

Berkeley Aluminium Radiators - Matt White

Size H x W	Delta △T30		Delta △T50		Code	£ Ex VAT	£ Inc VAT
	Watts	BTU	Watts	BTU			
603 x 600mm	186	635	342	1167	89.0711	150.00	**180.00**
603 x 800mm	244	833	449	1532	89.0712	197.00	**236.40**
603 x 1000mm	302	1030	555	1893	89.0713	247.00	**296.40**
603 x 1200mm	359	1225	660	2251	89.0714	296.00	**355.20**
603 x 1400mm	415	1416	763	2602	89.0715	344.00	**412.80**
603 x 1600mm	472	1610	866	2954	89.0716	391.00	**469.20**
603 x 1800mm	527	1798	969	3305	89.0717	441.00	**529.20**
603 x 2000mm	583	1989	1071	3653	89.0718	490.00	**588.00**

Berkeley Aluminium Radiators - Matt Grey

Size H x W	Delta △T30		Delta △T50		Code	£ Ex VAT	£ Inc VAT
	Watts	BTU	Watts	BTU			
603 x 600mm	186	635	342	1167	89.0719	150.00	**180.00**
603 x 800mm	244	833	449	1532	89.0720	197.00	**236.40**
603 x 1000mm	302	1030	555	1893	89.0721	247.00	**296.40**
603 x 1200mm	359	1225	660	2251	89.0722	296.00	**355.20**
603 x 1400mm	415	1416	763	2602	89.0723	344.00	**412.80**
603 x 1600mm	472	1610	866	2954	89.0724	391.00	**469.20**
603 x 1800mm	527	1798	969	3305	89.0725	441.00	**529.20**
603 x 2000mm	583	1989	1071	3653	89.0726	490.00	**588.00**

Berkeley Aluminium Radiators - Matt Anthracite

Size H x W	Delta △T30		Delta △T50		Code	£ Ex VAT	£ Inc VAT
	Watts	BTU	Watts	BTU			
603 x 600mm	186	635	342	1167	89.0727	150.00	**180.00**
603 x 800mm	244	833	449	1532	89.0728	197.00	**236.40**
603 x 1000mm	302	1030	555	1893	89.0729	247.00	**296.40**
603 x 1200mm	359	1225	660	2251	89.0730	296.00	**355.20**
603 x 1400mm	415	1416	763	2602	89.0731	344.00	**412.80**
603 x 1600mm	472	1610	866	2954	89.0732	391.00	**469.20**
603 x 1800mm	527	1798	969	3305	89.0733	441.00	**529.20**
603 x 2000mm	583	1989	1071	3653	89.0734	490.00	**588.00**

Side View

TECHNICAL INFORMATION

All measurements in Height by Width. Not suitable for elements. For matching valves see pages 338-353. Corrosion inhibitor must be added to the heating system and maintained. For indirect heating systems only. Tappings are the width of the rail and approx. 50mm off the wall. Projection from wall 70mm.

Aluminium Range

TORDINO VERTICAL

Pictured 89.1208 Matt White with 101.0110 Circle Towel Hanger Chrome

Round Vent Caps
Page 357

Pictured 89.1225 Matt Anthracite with 89.0136 Towel Hangers

An aluminium radiator with front facing curved panels that will add luxury to your desired room, with a choice of towel hangers and your bathroom can also be heated while drying your towels. Available in vertical and horizontal styles and 4 colours options.

Warranty 5 Year | Heating | All Electric | Dual-Fuel

TECHNICAL INFORMATION

All measurements in Height by Width. For matching valves see pages 338-353. Corrosion inhibitor must be added to the heating system and maintained. Flow diverter must only be fitted when radiator installed on central heating system. For indirect heating systems only. Tappings are the width of the rail and 31 or 51mm off the wall. Projection from wall is 80 or 100mm.

FEATURES

- Excellent heat conductivity and lightweight
- Only requires a low water volume
- Heats up very quickly
- Radiators come with cover caps on top and bottom, same as radiator colour
- Tested to BS EN 442 standards
- 5 Year Manufacturer's Warranty*
- Can be single or dual fuel, or all electric

* With conditions

Technical Tables & Drawings
Page 414-415

Radiator Valves
Page 338-353

Aluminium Range

TORDINO VERTICAL

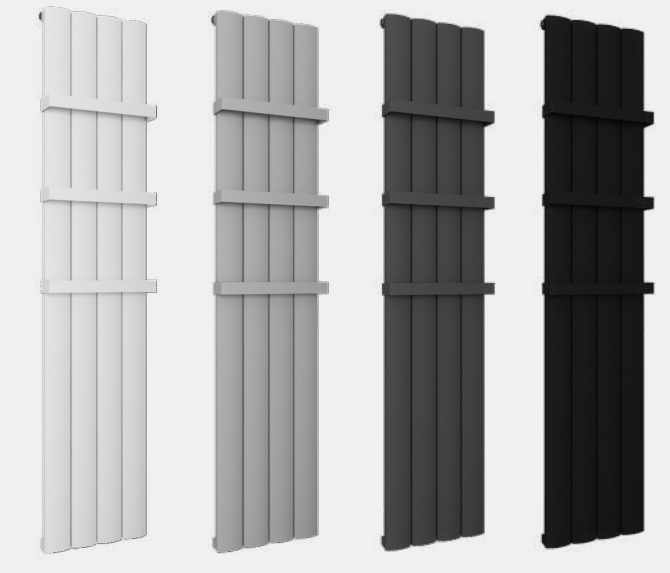

Matt White | Matt Grey | Matt Anthracite | Matt Black

Pictured 89.1215 Matt Grey

Tordino Vertical Aluminium Radiators - Matt White

Size H x W	Delta △T30 Watts	Delta △T30 BTU	Delta △T50 Watts	Delta △T50 BTU	Element Output	Code	£ Ex VAT	£ Inc VAT
1800 x 280mm	359	1225	686	2340	450W	89.1205	314.00	**376.80**
1800 x 375mm	477	1627	912	3110	600W	89.1206	403.00	**483.60**
1800 x 470mm	595	2029	1136	3874	750W	89.1207	492.00	**590.40**
1800 x 565mm	712	2428	1360	4638	1000W	89.1208	590.00	**708.00**

Tordino Vertical Aluminium Radiators - Matt Grey

Size H x W	Delta △T30 Watts	Delta △T30 BTU	Delta △T50 Watts	Delta △T50 BTU	Element Output	Code	£ Ex VAT	£ Inc VAT
1800 x 280mm	359	1225	686	2340	450W	89.1214	314.00	**376.80**
1800 x 375mm	477	1627	912	3110	600W	89.1215	403.00	**483.60**
1800 x 470mm	595	2029	1136	3874	750W	89.1216	492.00	**590.40**
1800 x 565mm	712	2428	1360	4638	1000W	89.1217	590.00	**708.00**

Tordino Vertical Aluminium Radiators - Matt Anthracite

Size H x W	Delta △T30 Watts	Delta △T30 BTU	Delta △T50 Watts	Delta △T50 BTU	Element Output	Code	£ Ex VAT	£ Inc VAT
1800 x 280mm	359	1225	686	2340	450W	89.1223	314.00	**376.80**
1800 x 375mm	477	1627	912	3110	600W	89.1224	403.00	**483.60**
1800 x 470mm	595	2029	1136	3874	750W	89.1225	492.00	**590.40**
1800 x 565mm	712	2428	1360	4638	1000W	89.1226	590.00	**708.00**

Tordino Vertical Aluminium Radiators - Matt Black

Size H x W	Delta △T30 Watts	Delta △T30 BTU	Delta △T50 Watts	Delta △T50 BTU	Element Output	Code	£ Ex VAT	£ Inc VAT
1800 x 280mm	359	1225	686	2340	450W	89.1232	314.00	**376.80**
1800 x 375mm	477	1627	912	3110	600W	89.1233	403.00	**483.60**
1800 x 470mm	595	2029	1136	3874	750W	89.1234	492.00	**590.40**
1800 x 565mm	712	2428	1360	4638	1000W	89.1235	590.00	**708.00**

Prices include radiator and wall fixing sets, valves and accessories extra.

All Tordino models shown above are compatible with Element Type A, A+, F* and G* (*only if cable goes through the wall)

For all Tordino Matt White, Matt Grey, Matt Anthacite, Matt Black, Chrome and Premium Towel Hangers, please refer to page 251.

For element types see pages 324-337.

Element can only be installed vertically on the right-hand or left-hand side on the bottom header. Radiators that are electric only are restricted to the heat output of the elements. Element size can be increased to full capacity of rail if using element type F or G. For dual fuel installations, element must be installed on flow side.

Tordino Cover Cap Sets - Chrome

Description	Code	£ Ex VAT	£ Inc VAT
Cover Cap Set 280mm	89.1236	14.00	**16.80**
Cover Cap Set 375mm	89.1237	16.00	**19.20**
Cover Cap Set 470mm	89.1238	18.00	**21.60**
Cover Cap Set 565mm	89.1239	23.00	**27.60**

Cover cap sets only include cover caps for the top or bottom of the radiator.

Aluminium Range

TORDINO HORIZONTAL

Pictured 89.1221 Matt Anthracite

Pictured 89.1212 Matt Grey

Tordino Horizontal Aluminium Radiators - Matt White

Size H x W	Delta △T30 Watts	Delta △T30 BTU	Delta △T50 Watts	Delta △T50 BTU	Element Output	Code	£ Ex VAT	£ Inc VAT
600 x 470mm	208	710	409	1395	300W	89.1200	258.00	**309.60**
600 x 660mm	290	989	569	1941	450W	89.1201	339.00	**406.80**
600 x 850mm	371	1266	728	2483	600W	89.1202	424.00	**508.80**
600 x 1040mm	451	1538	887	3025	750W	89.1203	502.00	**602.40**
600 x 1230mm	531	1811	1044	3561	900W	89.1204	592.00	**710.40**

Tordino Horizontal Aluminium Radiators - Matt Grey

Size H x W	Delta △T30 Watts	Delta △T30 BTU	Delta △T50 Watts	Delta △T50 BTU	Element Output	Code	£ Ex VAT	£ Inc VAT
600 x 470mm	208	710	409	1395	300W	89.1209	258.00	**309.60**
600 x 660mm	290	989	569	1941	450W	89.1210	339.00	**406.80**
600 x 850mm	371	1266	728	2483	600W	89.1211	424.00	**508.80**
600 x 1040mm	451	1538	887	3025	750W	89.1212	502.00	**602.40**
600 x 1230mm	531	1811	1044	3561	900W	89.1213	592.00	**710.40**

Tordino Horizontal Aluminium Radiators - Matt Anthracite

Size H x W	Delta △T30 Watts	Delta △T30 BTU	Delta △T50 Watts	Delta △T50 BTU	Element Output	Code	£ Ex VAT	£ Inc VAT
600 x 470mm	208	710	409	1395	300W	89.1218	258.00	**309.60**
600 x 660mm	290	989	569	1941	450W	89.1219	339.00	**406.80**
600 x 850mm	371	1266	728	2483	600W	89.1220	424.00	**508.80**
600 x 1040mm	451	1538	887	3025	750W	89.1221	502.00	**602.40**
600 x 1230mm	531	1811	1044	3561	900W	89.1222	592.00	**710.40**

Tordino Horizontal Aluminium Radiators - Matt Black

Size H x W	Delta △T30 Watts	Delta △T30 BTU	Delta △T50 Watts	Delta △T50 BTU	Element Output	Code	£ Ex VAT	£ Inc VAT
600 x 470mm	208	710	409	1395	300W	89.1227	258.00	**309.60**
600 x 660mm	290	989	569	1941	450W	89.1228	339.00	**406.80**
600 x 850mm	371	1266	728	2483	600W	89.1229	424.00	**508.80**
600 x 1040mm	451	1538	887	3025	750W	89.1230	502.00	**602.40**
600 x 1230mm	531	1811	1044	3561	900W	89.1231	592.00	**710.40**

Prices include radiator and wall fixing sets, valves and accessories extra.

Warranty 5 Year | Heating | All Electric | Dual-Fuel

FEATURES
- Excellent heat conductivity and lightweight
- Only requires a low water volume
- Heats up very quickly
- Radiators come with cover caps on top and bottom, same as radiator colour
- Tested to BS EN 442 standards
- 5 Year Manufacturer's Warranty*
- Can be single or dual fuel, or all electric

* With conditions

Technical Tables & Drawings
Page 414-415

TECHNICAL INFORMATION

All measurements in Height by Width. For matching valves see pages 338-353. Corrosion inhibitor must be added to the heating system and maintained. Flow diverter must only be fitted when radiator installed on central heating system. For indirect heating systems only. Tappings are the width of the rail and 31 or 51mm off the wall. Projection from wall is 80 or 100mm.

Tordino Cover Cap Sets - Chrome

Description	Code	£ Ex VAT	£ Inc VAT
Cover Cap Set 470mm	89.1238	18.00	**21.60**
Cover Cap Set 660mm	89.1240	28.00	**33.60**
Cover Cap Set 850mm	89.1241	34.00	**40.80**
Cover Cap Set 1040mm	89.1242	41.00	**49.20**
Cover Cap Set 1230mm	89.1243	47.00	**56.40**

Cover cap sets only include cover caps for the top or bottom of the radiator.

All Tordino models shown above are compatible with Element Type A, A+, C and H

For element types see pages 324-337.

Element can only be installed horizontally on the bottom header. Radiators that are electric only are restricted to the heat output of the elements. (Type C&H up to 900 Watts)

Round Vent Caps
Page 357

Aluminium Range

TORDINO STANDARD TOWEL HANGERS

Towel Hanger - Matt White

Size	Code	£ Ex VAT	£ Inc VAT
280mm	89.0177	62.00	**74.40**
375mm	89.0178	66.00	**79.20**
470mm	89.0179	74.00	**88.80**
565mm	86.0333	78.00	**93.60**

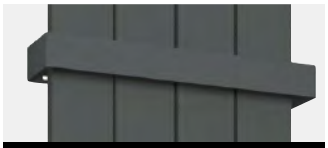

Towel Hanger - Matt Anthracite

Size	Code	£ Ex VAT	£ Inc VAT
280mm	89.0180	62.00	**74.40**
375mm	89.0181	66.00	**79.20**
470mm	89.0182	74.00	**88.80**
565mm	86.0334	78.00	**93.60**

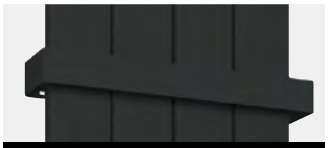

Towel Hanger - Matt Black

Size	Code	£ Ex VAT	£ Inc VAT
280mm	89.0183	62.00	**74.40**
375mm	89.0184	66.00	**79.20**
470mm	89.0185	74.00	**88.80**
565mm	86.0335	78.00	**93.60**

Towel Hanger - Chrome

Size	Code	£ Ex VAT	£ Inc VAT
280mm	89.0134	53.00	**63.60**
375mm	89.0135	56.00	**67.20**
470mm	89.0136	65.00	**78.00**
565mm	86.0336	72.00	**86.40**

TECHNICAL INFORMATION

Material: Steel (Premium: Stainless Steel - Grade 304)

Vertical Radiators:

1800mm height radiators comes with 3 pre-drilled towel hanger locations, with a maximum of 3 towel hangers - all widths; 280, 375, 470 and 565mm. The standard towel hangers are only compatible with the Vertical Radiators.

Can be fitted after installation only on high adjustment bracket fitting.

Horizontal Radiators:

Don't have holes for Standard Towel Hangers. Standard Towel Hanger can not be fitted. The Tordino Standard Towel Hangers will add approx 8mm width on each side once fitted to the radiator.

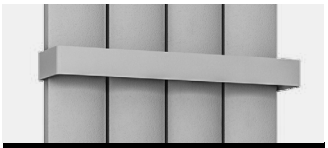

Towel Hanger - Matt Grey

Size	Code	£ Ex VAT	£ Inc VAT
280mm	89.1616	62.00	**74.40**
375mm	89.1617	66.00	**79.20**
470mm	89.1618	74.00	**88.80**
565mm	89.1619	78.00	**93.60**

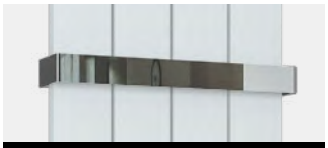

Towel Hanger - Mirror Polished Premium

Size	Code	£ Ex VAT	£ Inc VAT
280mm	86.0198	73.00	**87.60**
375mm	86.0199	80.00	**96.00**
470mm	86.0200	87.00	**104.40**
565mm	86.0337	93.00	**111.60**

TORDINO DESIGNER TOWEL HANGERS

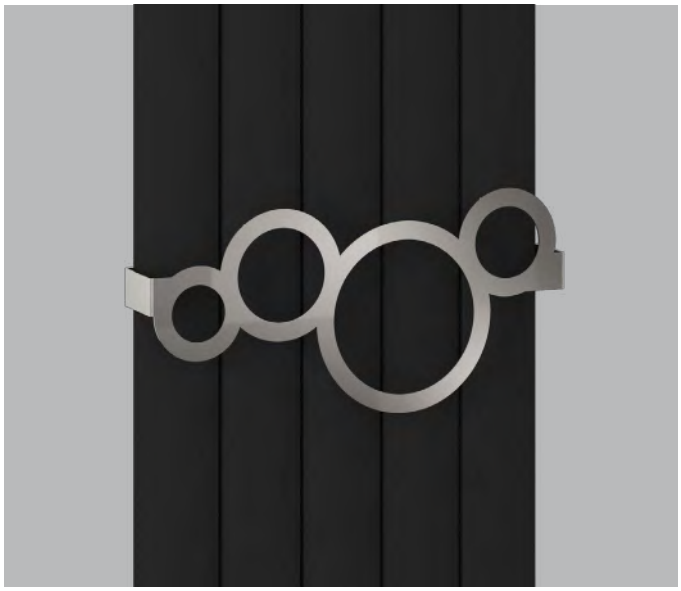

Square Style

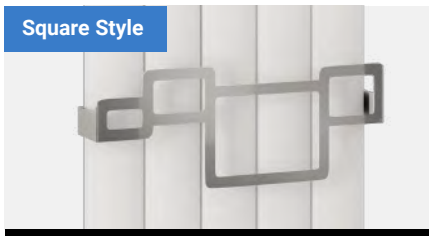

Square Towel Hanger - Chrome

Size	Code	£ Ex VAT	£ Inc VAT
375mm	101.0084	83.00	**99.60**
470mm	101.0085	96.00	**115.20**
565mm	101.0086	112.00	**134.40**

Circle Style

Circle Towel Hanger - Chrome

Size	Code	£ Ex VAT	£ Inc VAT
375mm	101.0108	84.00	**100.80**
470mm	101.0109	98.00	**117.60**
565mm	101.0110	116.00	**139.20**

TECHNICAL INFORMATION

Material: **Steel**

Square, Triangle and Circle Towel Hangers are only compatible with vertical radiators and can be fitted to one of the three pre-drilled holes on the 1800mm height radiators. Square, Triangle and Circle Towel Hangers will add approx 8mm width on each side once fitted to the radiator. **Can be fitted after installation only on high adjustment bracket fitting.**

Aluminium Range

GUARDIA VERTICAL

Pictured 86.0032 Matt White with 86.0239 Towel Hanger

A versatile designer radiator which can be fitted to show the flat side or the curved profile of the panels, allowing the radiator to fit into your lifestyle and decor. Available in horizontal and vertical designs this radiator heats up quickly to warm your whole room.

Guardia Vertical Aluminium Radiators - Matt White

Size H x W	Delta △T30		Delta △T50		Code	£ Ex VAT	£ Inc VAT
	Watts	BTU	Watts	BTU			
1200 x 280mm	267	911	558	1903	86.0446	339.00	**406.80**
1200 x 375mm	356	1214	744	2538	86.0449	437.00	**524.40**
1200 x 470mm	445	1518	930	3172	86.0452	535.00	**642.00**
1200 x 565mm	534	1821	1116	3806	86.0455	633.00	**759.60**
1800 x 280mm	381	1300	801	2732	86.0029	450.00	**540.00**
1800 x 375mm	508	1733	1067	3639	86.0032	585.00	**702.00**
1800 x 470mm	635	2166	1334	4549	86.0035	719.00	**862.80**
1800 x 565mm	732	2497	1601	5460	86.0291	863.00	**1035.60**
1800 x 660mm	889	3032	1868	6370	86.0494	995.00	**1194.00**

Guardia Vertical Aluminium Radiators - Matt Grey

Size H x W	Delta △T30		Delta △T50		Code	£ Ex VAT	£ Inc VAT
	Watts	BTU	Watts	BTU			
1200 x 280mm	267	911	558	1903	86.0482	339.00	**406.80**
1200 x 375mm	356	1214	744	2538	86.0483	437.00	**524.40**
1200 x 470mm	445	1518	930	3172	86.0484	535.00	**642.00**
1200 x 565mm	534	1821	1116	3806	86.0485	633.00	**759.60**
1800 x 280mm	381	1300	801	2732	86.0189	450.00	**540.00**
1800 x 375mm	508	1733	1067	3639	86.0190	585.00	**702.00**
1800 x 470mm	635	2166	1334	4549	86.0191	719.00	**862.80**
1800 x 565mm	732	2497	1601	5460	86.0292	863.00	**1035.60**
1800 x 660mm	889	3032	1868	6370	86.0495	995.00	**1194.00**

Guardia Vertical Aluminium Radiators - Matt Anthracite

Size H x W	Delta △T30		Delta △T50		Code	£ Ex VAT	£ Inc VAT
	Watts	BTU	Watts	BTU			
1200 x 280mm	267	911	558	1903	86.0447	339.00	**406.80**
1200 x 375mm	356	1214	744	2538	86.0450	437.00	**524.40**
1200 x 470mm	445	1518	930	3172	86.0453	535.00	**642.00**
1200 x 565mm	534	1821	1116	3806	86.0456	633.00	**759.60**
1800 x 280mm	381	1300	801	2732	86.0030	450.00	**540.00**
1800 x 375mm	508	1733	1067	3639	86.0033	585.00	**702.00**
1800 x 470mm	635	2166	1334	4549	86.0036	719.00	**862.80**
1800 x 565mm	732	2497	1601	5460	86.0293	863.00	**1035.60**
1800 x 660mm	889	3032	1868	6370	86.0496	995.00	**1194.00**

Guardia Vertical Aluminium Radiators - Matt Black

Size H x W	Delta △T30		Delta △T50		Code	£ Ex VAT	£ Inc VAT
	Watts	BTU	Watts	BTU			
1200 x 280mm	267	911	558	1903	86.0448	339.00	**406.80**
1200 x 375mm	356	1214	744	2538	86.0451	437.00	**524.40**
1200 x 470mm	445	1518	930	3172	86.0454	535.00	**642.00**
1200 x 565mm	534	1821	1116	3806	86.0457	633.00	**759.60**
1800 x 280mm	381	1300	801	2732	86.0031	450.00	**540.00**
1800 x 375mm	508	1733	1067	3639	86.0034	585.00	**702.00**
1800 x 470mm	635	2166	1334	4549	86.0037	719.00	**862.80**
1800 x 565mm	732	2497	1601	5460	86.0294	863.00	**1035.60**
1800 x 660mm	889	3032	1868	6370	86.0497	995.00	**1194.00**

Guardia Cover Cap Sets - Chrome

Description	Code	£ Ex VAT	£ Inc VAT
Cover Cap Set 280mm	86.0118	22.00	**26.40**
Cover Cap Set 375mm	86.0119	28.00	**33.60**
Cover Cap Set 470mm	86.0120	34.00	**40.80**
Cover Cap Set 565mm	86.0311	39.00	**46.80**
Cover Cap Set 660mm	86.0121	45.00	**54.00**

Cover cap sets only include cover caps for the top or bottom of the radiator.

Aluminium Range

GUARDIA VERTICAL

FEATURES

- Can be reversed when hanging on the wall
- Excellent heat conductivity and lightweight
- Only requires a low water volume
- Heats up very quickly
- Radiators come with cover caps on top and bottom, same as radiator colour
- Tested to BS EN 442 standards
- 5 Year Manufacturer's Warranty*
- Not suitable for elements

* With conditions

TECHNICAL INFORMATION

All measurements in Height by Width. Not suitable for elements. For matching valves see pages 338-353. Corrosion inhibitor must be added to the heating system and maintained. Flow diverter must only be fitted when radiator installed on central heating system. For indirect heating systems only. Tappings are the width of the rail and approx. 65mm off the wall. Price includes radiator and wall fixing sets, valves extra.

Can be reversed when hanging on the wall. Either side can be used as front facing.

Matt White

Matt Grey

Matt Anthracite

Matt Black

GUARDIA - WALL MOUNTED TOWEL HANGERS

Towel Hanger - Matt White

Size	Code	£ Ex VAT	£ Inc VAT
280mm	86.0226	83.00	**99.60**
375mm	86.0227	92.00	**110.40**
470mm	86.0228	98.00	**117.60**
565mm	86.0343	109.00	**130.80**

Towel Hanger - Matt Grey

Size	Code	£ Ex VAT	£ Inc VAT
280mm	86.0229	83.00	**99.60**
375mm	86.0230	92.00	**110.40**
470mm	86.0231	98.00	**117.60**
565mm	86.0344	109.00	**130.80**

Towel Hanger - Matt Anthracite

Size	Code	£ Ex VAT	£ Inc VAT
280mm	86.0232	83.00	**99.60**
375mm	86.0233	92.00	**110.40**
470mm	86.0234	98.00	**117.60**
565mm	86.0345	109.00	**130.80**

Towel Hanger - Matt Black

Size	Code	£ Ex VAT	£ Inc VAT
280mm	86.0235	83.00	**99.60**
375mm	86.0236	92.00	**110.40**
470mm	86.0237	98.00	**117.60**
565mm	86.0346	109.00	**130.80**

TECHNICAL INFORMATION

Material: **Steel**

Vertical Radiators:

- Guardia Towel Hangers must be mounted on the wall. Can be fitted on both flat and curved type of installation.
- Guardia Towel Hangers can be mounted Left Hand or Right Hand of the radiator. Once the towel hanger is mounted on the wall, the radiator must be fitted from the side.
- Total length of each towel hanger is 30mm longer than the width of the radiator, making the radiator's width +30mm on the side they are mounted on. Towel hangers can mounted at any height vertically on the wall.

Must be fitted before radiator installation!

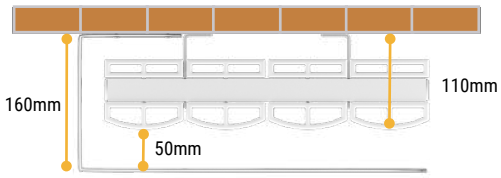

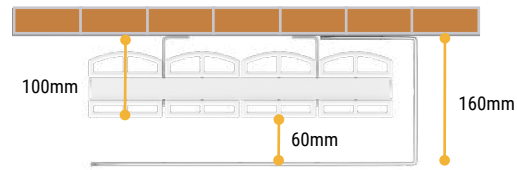

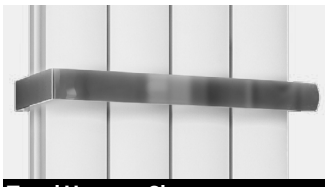

Towel Hanger - Chrome

Size	Code	£ Ex VAT	£ Inc VAT
280mm	86.0238	87.00	**104.40**
375mm	86.0239	96.00	**115.20**
470mm	86.0240	111.00	**133.20**
565mm	86.0347	118.00	**141.60**

Technical Tables & Drawings
Page 416-417

Aluminium Range

GUARDIA HORIZONTAL

Pictured 86.0170 Matt White

Pictured 86.0500 Matt Anthracite

Can be reversed when hanging on the wall. Either side can be used as front facing.

Flat Side >>

Curved Side >>

For element types see pages 324-337. Element can only be installed horizontally on the bottom header. When ordering fluid filled rails with elements, please specify the front facing side. The element will be fitted on the right hand side as standard.

Radiators that are electric only are restricted to the heat output of the elements (Type C&H up to 900 watts).

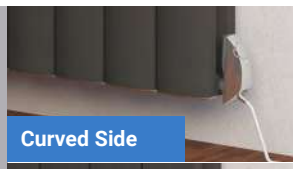

Curved Side

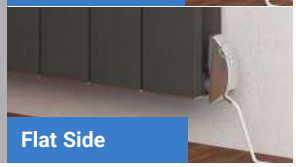

Flat Side

Guardia Cover Cap Sets - Chrome

Description	Code	£ Ex VAT	£ Inc VAT
Cover Cap Set 470mm	86.0120	34.00	**40.80**
Cover Cap Set 660mm	86.0121	45.00	**54.00**
Cover Cap Set 850mm	86.0122	57.00	**68.40**
Cover Cap Set 1040mm	86.0123	74.00	**88.80**
Cover Cap Set 1230mm	86.0124	80.00	**96.00**
Cover Cap Set 1420mm	86.0175	96.00	**115.20**
Cover Cap Set 1610mm	86.0574	113.00	**135.60**
Cover Cap Set 1800mm	86.0575	126.00	**151.20**

Cover cap sets only include cover caps for the top or bottom of the radiator.

Aluminium Range

GUARDIA HORIZONTAL

A versatile designer radiator which can be fitted to show the flat panel side or the curved style of the panels, allowing the radiator to fit into your lifestyle and decor. Available in horizontal and vertical designs this radiator heats up quickly to warm your whole room.

Matt White

Guardia Horizontal Aluminium Radiators - Matt White 600mm Height

Width	Delta △T30 Watts	Delta △T30 BTU	Delta △T50 Watts	Delta △T50 BTU	Element Output	Element Type	Code	£ Ex VAT	£ Inc VAT
470mm	335	1143	637	2173	300W	A, A+, C, H	86.0038	310.00	**372.00**
660mm	497	1695	891	3039	450W	A, A+, C, H	86.0041	417.00	**500.40**
850mm	604	2060	1146	3908	600W	A, A+, C, H	86.0044	523.00	**627.60**
1040mm	738	2517	1400	4774	900W	A, A+, H	86.0047	629.00	**754.80**
1230mm	872	2974	1655	5644	1000W	A, A+	86.0050	735.00	**882.00**
1420mm	1007	3434	1910	6514	1000W	A, A+	86.0170	843.00	**1011.60**
1610mm	1141	3891	2164	7380	1200W	A, A+	86.0498	953.00	**1143.60**
1800mm	1275	4348	2419	8249	1200W	A, A+	86.0502	1061.00	**1273.20**

Matt Grey

Guardia Horizontal Aluminium Radiators - Matt Grey 600mm Height

Width	Delta △T30 Watts	Delta △T30 BTU	Delta △T50 Watts	Delta △T50 BTU	Element Output	Element Type	Code	£ Ex VAT	£ Inc VAT
470mm	335	1143	637	2173	300W	A, A+, C, H	86.0192	310.00	**372.00**
660mm	497	1695	891	3039	450W	A, A+, C, H	86.0193	417.00	**500.40**
850mm	604	2060	1146	3908	600W	A, A+, C, H	86.0194	523.00	**627.60**
1040mm	738	2517	1400	4774	900W	A, A+, H	86.0195	629.00	**754.80**
1230mm	872	2974	1655	5644	1000W	A, A+	86.0196	735.00	**882.00**
1420mm	1007	3434	1910	6514	1000W	A, A+	86.0197	843.00	**1011.60**
1610mm	1141	3891	2164	7380	1200W	A, A+	86.0499	953.00	**1143.60**
1800mm	1275	4348	2419	8249	1200W	A, A+	86.0503	1061.00	**1273.20**

Matt Anthracite

Guardia Horizontal Aluminium Radiators - Matt Anthracite 600mm Height

Width	Delta △T30 Watts	Delta △T30 BTU	Delta △T50 Watts	Delta △T50 BTU	Element Output	Element Type	Code	£ Ex VAT	£ Inc VAT
470mm	335	1143	637	2173	300W	A, A+, C, H	86.0039	310.00	**372.00**
660mm	497	1695	891	3039	450W	A, A+, C, H	86.0042	417.00	**500.40**
850mm	604	2060	1146	3908	600W	A, A+, C, H	86.0045	523.00	**627.60**
1040mm	738	2517	1400	4774	900W	A, A+, H	86.0048	629.00	**754.80**
1230mm	872	2974	1655	5644	1000W	A, A+	86.0051	735.00	**882.00**
1420mm	1007	3434	1910	6514	1000W	A, A+	86.0171	843.00	**1011.60**
1610mm	1141	3891	2164	7380	1200W	A, A+	86.0500	953.00	**1143.60**
1800mm	1275	4348	2419	8249	1200W	A, A+	86.0504	1061.00	**1273.20**

Matt Black

Guardia Horizontal Aluminium Radiators - Matt Black 600mm Height

Width	Delta △T30 Watts	Delta △T30 BTU	Delta △T50 Watts	Delta △T50 BTU	Element Output	Element Type	Code	£ Ex VAT	£ Inc VAT
470mm	335	1143	637	2173	300W	A, A+, C, H	86.0040	310.00	**372.00**
660mm	497	1695	891	3039	450W	A, A+, C, H	86.0043	417.00	**500.40**
850mm	604	2060	1146	3908	600W	A, A+, C, H	86.0046	523.00	**627.60**
1040mm	738	2517	1400	4774	900W	A, A+, H	86.0049	629.00	**754.80**
1230mm	872	2974	1655	5644	1000W	A, A+	86.0052	735.00	**882.00**
1420mm	1007	3434	1910	6514	1000W	A, A+	86.0172	843.00	**1011.60**
1610mm	1141	3891	2164	7380	1200W	A, A+	86.0501	953.00	**1143.60**
1800mm	1275	4348	2419	8249	1200W	A, A+	86.0505	1061.00	**1273.20**

FEATURES

- Can be reversed when hanging on the wall
- Excellent heat conductivity and lightweight
- Only requires a low water volume
- Heats up very quickly
- Radiators come with cover caps on top and bottom, same as radiator colour
- Tested to BS EN 442 standards
- 5 Year Manufacturer's Warranty*

With conditions

Technical Tables & Drawings
Page 416-417

Matt White

Matt Grey

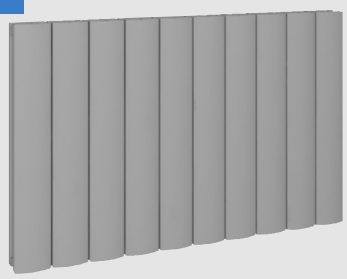

Matt Anthracite

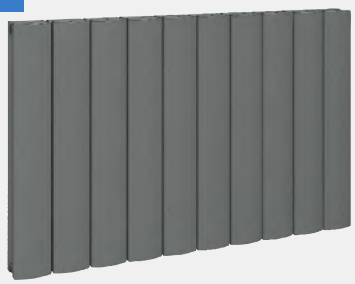

Matt Black

TECHNICAL INFORMATION

All measurements in Height by Width. For matching valves see pages 338-353. Corrosion inhibitor must be added to the heating system and maintained. Flow diverter must only be fitted when radiator installed on central heating system. For indirect heating systems only. Tappings are the width of the rail and approx. 65mm off the wall. Price includes radiator and wall fixing sets, valves extra.

Radiator Valves
Page 338-353

Aluminium Range

HADLEIGH VERTICAL

Pictured 86.0247 Matt White with 86.0322 Towel Hanger

A versatile aluminium radiator with double profile construction panels that allows the radiator to produce high heat outputs. This radiator will fit into your lifestyle. Vertical version is available in 3 colours, 2 heights and 4 different widths.

Hadleigh Vertical Aluminium Radiators - Matt White

Size H x W	Delta △T30		Delta △T50		Code	£ Ex VAT	£ Inc VAT
	Watts	BTU	Watts	BTU			
1200 x 275mm	259	884	540	1842	86.0461	320.00	**384.00**
1200 x 415mm	388	1324	809	2759	86.0464	457.00	**548.40**
1200 x 485mm	452	1542	944	3220	86.0467	526.00	**631.20**
1200 x 555mm	517	1763	1079	3680	86.0470	595.00	**714.00**
1800 x 275mm	352	1201	739	2520	86.0246	410.00	**492.00**
1800 x 415mm	528	1801	1108	3779	86.0247	585.00	**702.00**
1800 x 485mm	616	2101	1292	4406	86.0248	672.00	**806.40**
1800 x 555mm	704	2401	1477	5037	86.0458	758.00	**909.60**

Hadleigh Vertical Aluminium Radiators - Matt Anthracite

Size H x W	Delta △T30		Delta △T50		Code	£ Ex VAT	£ Inc VAT
	Watts	BTU	Watts	BTU			
1200 x 275mm	259	884	540	1842	86.0462	320.00	**384.00**
1200 x 415mm	388	1324	809	2759	86.0465	457.00	**548.40**
1200 x 485mm	452	1542	944	3220	86.0468	526.00	**631.20**
1200 x 555mm	517	1763	1079	3680	86.0471	595.00	**714.00**
1800 x 275mm	352	1201	739	2520	86.0254	410.00	**492.00**
1800 x 415mm	528	1801	1108	3779	86.0255	585.00	**702.00**
1800 x 485mm	616	2101	1292	4406	86.0256	672.00	**806.40**
1800 x 555mm	704	2401	1477	5037	86.0459	758.00	**909.60**

Hadleigh Vertical Aluminium Radiators - Matt Black

Size H x W	Delta △T30		Delta △T50		Code	£ Ex VAT	£ Inc VAT
	Watts	BTU	Watts	BTU			
1200 x 275mm	259	884	540	1842	86.0463	320.00	**384.00**
1200 x 415mm	388	1324	809	2759	86.0466	457.00	**548.40**
1200 x 485mm	452	1542	944	3220	86.0469	526.00	**631.20**
1200 x 555mm	517	1763	1079	3680	86.0472	595.00	**714.00**
1800 x 275mm	352	1201	739	2520	86.0262	410.00	**492.00**
1800 x 415mm	528	1801	1108	3779	86.0263	585.00	**702.00**
1800 x 485mm	616	2101	1292	4406	86.0264	672.00	**806.40**
1800 x 555mm	704	2401	1477	5037	86.0460	758.00	**909.60**

FEATURES

- Special double profile construction for high heat output
- Excellent heat conductivity and lightweight
- Only requires a low water volume
- Heats up very quickly
- Radiators come with cover caps on top and bottom, same as radiator colour
- Tested to BS EN 442 standards
- Not suitable for elements
- 5 Year Manufacturer's Warranty*

* With conditions

TECHNICAL INFORMATION

All measurements in Height by Width. Not suitable for elements. For matching valves see pages 338-353. Corrosion inhibitor must be added to the heating system and maintained. Flow diverter must only be fitted when radiator installed on central heating system. For indirect heating systems only. Tappings are the width of the rail and approx. 65mm off the wall. Price includes radiator and wall fixing sets, valves extra.

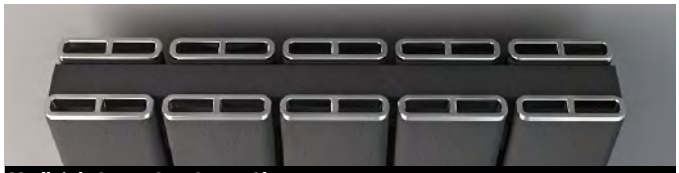

Hadleigh Cover Cap Sets - Chrome

Description	Code	£ Ex VAT	£ Inc VAT
Cover Cap Set 275mm	86.0295	39.00	**46.80**
Cover Cap Set 415mm	86.0296	52.00	**62.40**
Cover Cap Set 485mm	86.0297	60.00	**72.00**
Cover Cap Set 555mm	86.0488	67.00	**80.40**

Cover cap sets only include cover caps for the top or bottom of the radiator.

Aluminium Range

HADLEIGH VERTICAL

Pictured 86.0468 Matt Anthracite

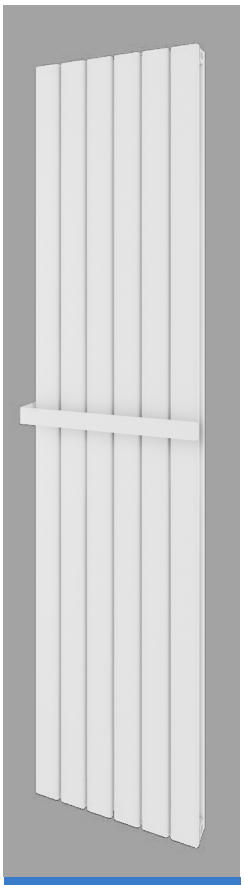
Matt White

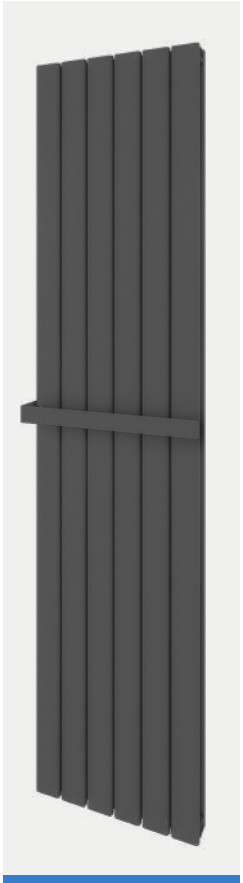
Matt Anthracite

Matt Black

HADLEIGH - WALL MOUNTED TOWEL HANGERS

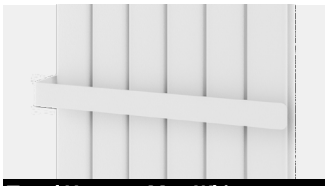

Towel Hanger - Matt White

Size	Code	£ Ex VAT	£ Inc VAT
275mm	86.0312	81.00	**97.20**
415mm	86.0313	90.00	**108.00**
485mm	86.0314	98.00	**117.60**
555mm	86.0490	113.00	**135.60**

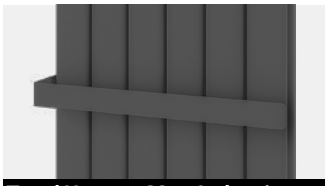

Towel Hanger - Matt Anthracite

Size	Code	£ Ex VAT	£ Inc VAT
275mm	86.0315	81.00	**97.20**
415mm	86.0316	90.00	**108.00**
485mm	86.0317	98.00	**117.60**
555mm	86.0491	113.00	**135.60**

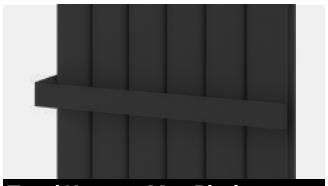

Towel Hanger - Matt Black

Size	Code	£ Ex VAT	£ Inc VAT
275mm	86.0318	81.00	**97.20**
415mm	86.0319	90.00	**108.00**
485mm	86.0320	98.00	**117.60**
555mm	86.0492	113.00	**135.60**

Towel Hanger - Chrome

Size	Code	£ Ex VAT	£ Inc VAT
275mm	86.0321	87.00	**104.40**
415mm	86.0322	95.00	**114.00**
485mm	86.0323	110.00	**132.00**
555mm	86.0493	125.00	**150.00**

TECHNICAL INFORMATION

Material: **Steel**

Vertical Radiators:

- Hadleigh Towel Hangers must be mounted on the wall.
- Hadleigh Towel Hangers can be mounted Left Hand or Right Hand of the radiator. Once the towel hanger is mounted on the wall, the radiator must be fitted from the side.
- Total length of each towel hanger is 30mm longer than the width of the radiator, making the radiator's width +30mm on the side they are mounted on. Towel hangers can mounted at any height vertically on the wall.

Must be fitted before radiator installation!

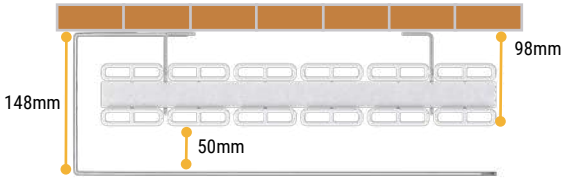

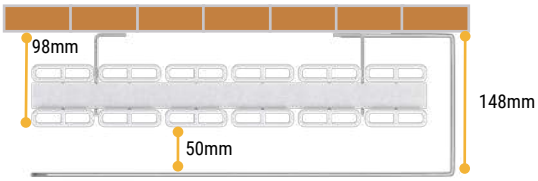

Radiator Valves
Page 338-353

Technical Tables & Drawings
Page 416-417

Aluminium Range

HADLEIGH HORIZONTAL

Warranty 5 Year | Heating | All Electric | Dual-Fuel

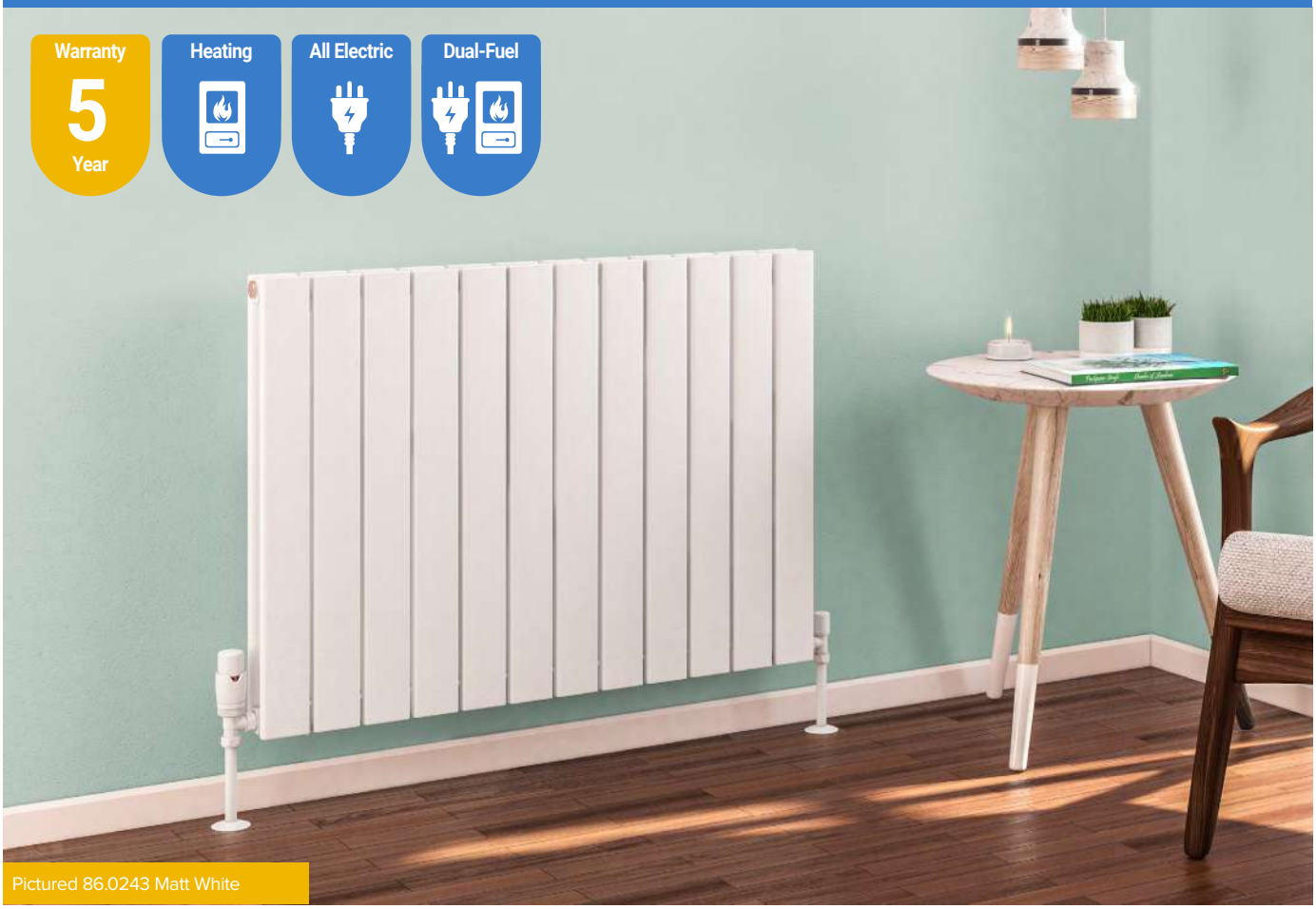

Pictured 86.0243 Matt White

Pictured 86.0252 Matt Anthracite with 86.0300 x2 Cover Caps Chrome

Aluminium Range

HADLEIGH HORIZONTAL

A versatile aluminium radiator with double profile construction panels that allows the radiator to produce high heat outputs. This radiator will fit into your lifestyle. Horizontal version is available in 3 colours, 1 height and 6 different widths.

Hadleigh Horizontal Aluminium Radiators - Matt White

Size H x W	Delta △T30		Delta △T50		Element Output	Code	£ Ex VAT	£ Inc VAT
	Watts	BTU	Watts	BTU				
600 x 485mm	288	983	576	1965	400W	86.0241	295.00	**354.00**
600 x 625mm	371	1266	740	2524	450W	86.0242	362.00	**434.40**
600 x 835mm	494	1685	987	3366	600W	86.0243	465.00	**558.00**
600 x 1045mm	618	2108	1234	4208	900W	86.0244	567.00	**680.40**
600 x 1255mm	742	2531	1480	5047	1000W	86.0245	669.00	**802.80**
600 x 1395mm	824	2810	1645	5610	1200W	86.0473	743.00	**891.60**

Hadleigh Horizontal Aluminium Radiators - Matt Anthracite

Size H x W	Delta △T30		Delta △T50		Element Output	Code	£ Ex VAT	£ Inc VAT
	Watts	BTU	Watts	BTU				
600 x 485mm	288	983	576	1965	400W	86.0249	295.00	**354.00**
600 x 625mm	371	1266	740	2524	450W	86.0250	362.00	**434.40**
600 x 835mm	494	1685	987	3366	600W	86.0251	465.00	**558.00**
600 x 1045mm	618	2108	1234	4208	900W	86.0252	567.00	**680.40**
600 x 1255mm	742	2531	1480	5047	1000W	86.0253	669.00	**802.80**
600 x 1395mm	824	2810	1645	5610	1200W	86.0474	743.00	**891.60**

Hadleigh Horizontal Aluminium Radiators - Matt Black

Size H x W	Delta △T30		Delta △T50		Element Output	Code	£ Ex VAT	£ Inc VAT
	Watts	BTU	Watts	BTU				
600 x 485mm	288	983	576	1965	400W	86.0257	295.00	**354.00**
600 x 625mm	371	1266	740	2524	450W	86.0258	362.00	**434.40**
600 x 835mm	494	1685	987	3366	600W	86.0259	465.00	**558.00**
600 x 1045mm	618	2108	1234	4208	900W	86.0260	567.00	**680.40**
600 x 1255mm	742	2531	1480	5047	1000W	86.0261	669.00	**802.80**
600 x 1395mm	824	2810	1645	5610	1200W	86.0475	743.00	**891.60**

FEATURES

- Special double profile construction for high heat output
- Excellent heat conductivity and lightweight
- Only requires a low water volume
- Heats up very quickly
- Radiators come with cover caps on top and bottom, same as radiator colour
- Tested to BS EN 442 standards
- 5 Year Manufacturer's Warranty*

* With conditions

Technical Tables & Drawings
Page 416-417

TECHNICAL INFORMATION

All measurements in Height by Width. For matching valves see pages 338-353. Corrosion inhibitor must be added to the heating system and maintained. Flow diverter must only be fitted when radiator installed on central heating system. For indirect heating systems only. Tappings are the width of the rail and approx. 65mm off the wall. Price includes radiator and wall fixing sets, valves extra.

All Hadleigh models shown above are compatible with Element Type A, A+, C and H

Radiator Valves
Page 338-353

For element types see pages 324-337.

Element can only be installed horizontally on the bottom header.

Radiators that are electric only are restricted to the heat output of the elements (Type C&H up to 900 watts).

Matt White

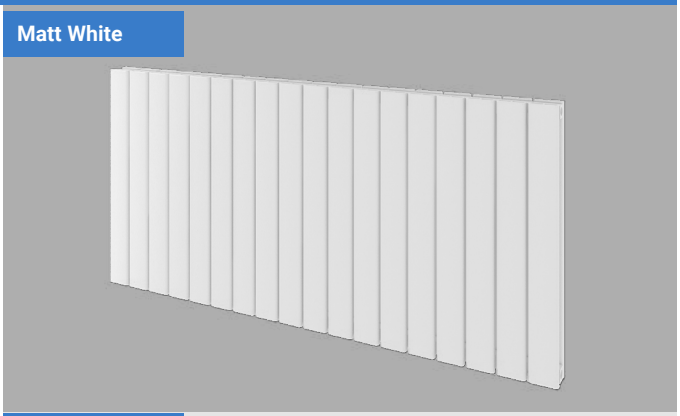

Matt Anthracite

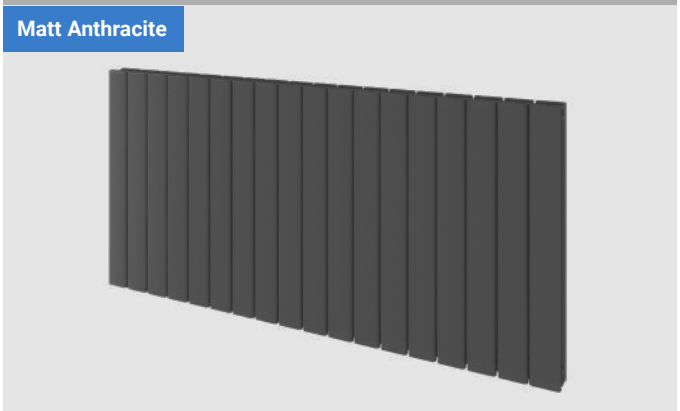

Matt Black

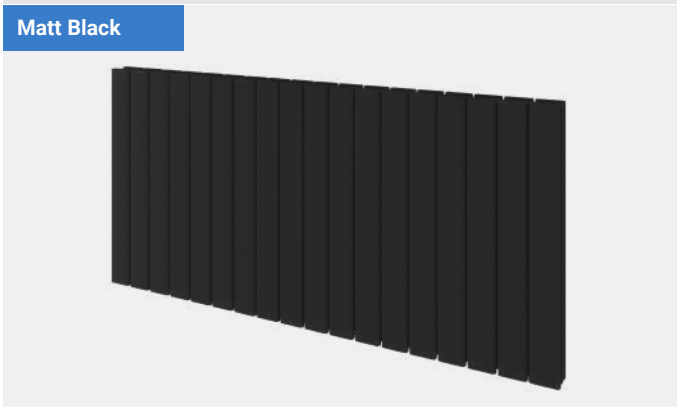

Hadleigh Cover Caps - Chrome

Description	Code	£ Ex VAT	£ Inc VAT
Cover Cap Set 485mm	86.0297	60.00	**72.00**
Cover Cap Set 625mm	86.0298	73.00	**87.60**
Cover Cap Set 835mm	86.0299	94.00	**112.80**
Cover Cap Set 1045mm	86.0300	114.00	**136.80**
Cover Cap Set 1255mm	86.0301	135.00	**162.00**
Cover Cap Set 1395mm	86.0486	149.00	**178.80**

Cover cap sets only include cover caps for the top or bottom of the radiator.

Aluminium Range

VESIMA VERTICAL

Pictured 86.0085 Matt Black

A sleek elegant aluminium radiator with clean lines which will provide a stylish focus to any room. Available in three colours as well as horizontal and vertical designs. Additional towel hangers available with the vertical design to allow versatility.

Vesima Vertical Aluminium Radiators - Matt White

Size H x W	Delta △T30		Delta △T50		Element Output	Code	£ Ex VAT	£ Inc VAT
	Watts	BTU	Watts	BTU				
1800 x 303mm	350	1194	716	2442	600W	86.0080	350.00	**420.00**
1800 x 403mm	467	1593	955	3257	900W	86.0083	442.00	**530.40**
1800 x 503mm	584	1992	1193	4069	900W	86.0086	535.00	**642.00**
1800 x 603mm	700	2387	1432	4884	900W	86.0476	642.00	**770.40**

Vesima Vertical Aluminium Radiators - Matt Anthracite

Size H x W	Delta △T30		Delta △T50		Element Output	Code	£ Ex VAT	£ Inc VAT
	Watts	BTU	Watts	BTU				
1800 x 303mm	350	1194	716	2442	600W	86.0081	350.00	**420.00**
1800 x 403mm	467	1593	955	3257	900W	86.0084	442.00	**530.40**
1800 x 503mm	584	1992	1193	4069	900W	86.0087	535.00	**642.00**
1800 x 603mm	700	2387	1432	4884	900W	86.0477	642.00	**770.40**

Vesima Vertical Aluminium Radiators - Matt Black

Size H x W	Delta △T30		Delta △T50		Element Output	Code	£ Ex VAT	£ Inc VAT
	Watts	BTU	Watts	BTU				
1800 x 303mm	350	1194	716	2442	600W	86.0082	350.00	**420.00**
1800 x 403mm	467	1593	955	3257	900W	86.0085	442.00	**530.40**
1800 x 503mm	584	1992	1193	4069	900W	86.0088	535.00	**642.00**
1800 x 603mm	700	2387	1432	4884	900W	86.0478	642.00	**770.40**

Prices include radiator and wall fixing sets, valves and accessories extra.

FEATURES

- Excellent heat conductivity and lightweight
- Only requires a low water volume
- Heats up very quickly
- Radiators come with cover caps on top and bottom, same as radiator colour
- Tested to BS EN 442 standards
- 5 Year Manufacturer's Warranty*
- Can be single or dual fuel, or all electric

* With conditions

Technical Tables & Drawings
Page 418-419

All Vesima models shown above are compatible with Element Type A

Aluminium Range

VESIMA VERTICAL

Matt White | Matt Anthracite | Matt Black

Pictured 86.0083 Matt White with 86.0105 Towel Hangers x3 & 86.0133 Cover Caps x2

VESIMA STANDARD TOWEL HANGERS

Vesima Standard Towel Hangers Premium Stainless Steel Mirror Polished

Description	Colour	Code	£ Ex VAT	£ Inc VAT
Towel Hanger 303mm	Premium Mirror Polished	86.0204	77.00	**92.40**
Towel Hanger 403mm	Premium Mirror Polished	86.0205	81.00	**97.20**
Towel Hanger 503mm	Premium Mirror Polished	86.0206	90.00	**108.00**
Towel Hanger 603mm	Premium Mirror Polished	86.0489	114.00	**136.80**

Vesima Standard Towel Hangers - Matt White

Description	Colour	Code	£ Ex VAT	£ Inc VAT
Towel Hanger 303mm	Matt White	89.0195	65.00	**78.00**
Towel Hanger 403mm	Matt White	89.0196	70.00	**84.00**
Towel Hanger 503mm	Matt White	89.0197	79.00	**94.80**
Towel Hanger 603mm	Matt White	89.1400	86.00	**103.20**

Vesima Standard Towel Hangers - Matt Anthracite

Description	Colour	Code	£ Ex VAT	£ Inc VAT
Towel Hanger 303mm	Matt Anthracite	89.0198	65.00	**78.00**
Towel Hanger 403mm	Matt Anthracite	89.0199	70.00	**84.00**
Towel Hanger 503mm	Matt Anthracite	89.0200	79.00	**94.80**
Towel Hanger 603mm	Matt Anthracite	89.1401	86.00	**103.20**

Vesima Standard Towel Hangers - Matt Black

Description	Colour	Code	£ Ex VAT	£ Inc VAT
Towel Hanger 303mm	Matt Black	89.0201	65.00	**78.00**
Towel Hanger 403mm	Matt Black	89.0202	70.00	**84.00**
Towel Hanger 503mm	Matt Black	89.0203	79.00	**94.80**
Towel Hanger 603mm	Matt Black	89.1402	86.00	**103.20**

Vesima Standard Towel Hangers - Chrome

Description	Colour	Code	£ Ex VAT	£ Inc VAT
Towel Hanger 303mm	Chrome	86.0104	55.00	**66.00**
Towel Hanger 403mm	Chrome	86.0105	65.00	**78.00**
Towel Hanger 503mm	Chrome	86.0106	70.00	**84.00**
Towel Hanger 603mm	Chrome	89.1403	77.00	**92.40**

TECHNICAL INFORMATION

All measurements in Height by Width. For matching valves see pages 338-353. Corrosion inhibitor must be added to the heating system and maintained. Flow diverter must only be fitted when radiator installed on central heating system. For indirect heating systems only. Tappings are the width of the rail and 60 or 80mm off the wall.

Vesima Cover Cap Sets - Chrome

Description	Code	£ Ex VAT	£ Inc VAT
Cover Cap Set 303mm	86.0132	19.00	**22.80**
Cover Cap Set 403mm	86.0133	23.00	**27.60**
Cover Cap Set 503mm	86.0134	27.00	**32.40**
Cover Cap Set 603mm	86.0135	31.00	**37.20**

Cover cap sets only include cover caps for the top or bottom of the radiator.

For element types see pages 324-337.

Element can be installed vertically on the right-hand side or left-hand side on the bottom header. Radiators that are electric only are restricted to the heat output of the elements. For dual fuel installations, element must be installed on flow side.

Aluminium Range

VESIMA HORIZONTAL

Pictured 86.0101 Matt White & 86.0138 Cover Caps x2

A sleek elegant aluminium radiator with clean lines which will provide a stylish focus to any room. Available in three colours as well as horizontal and vertical designs.

FEATURES
- Excellent heat conductivity and lightweight
- Only requires a low water volume
- Heats up very quickly
- Radiators come with cover caps on top and bottom, same as radiator colour
- Tested to BS EN 442 standards
- 5 Year Manufacturer's Warranty*
- Can be single or dual fuel, or all electric

* With conditions

Technical Tables & Drawings
Page 418-419

Warranty 5 Year | Heating | All Electric | Dual-Fuel

Aluminium Range

VESIMA HORIZONTAL

Vesima Horizontal Aluminium Radiators - Matt White

Size H x W	Delta △T30 Watts	Delta △T30 BTU	Delta △T50 Watts	Delta △T50 BTU	Element Output	Code	£ Ex VAT	£ Inc VAT
600 x 503mm	279	952	526	1794	300W	86.0089	238.00	**285.60**
600 x 603mm	335	1143	631	2152	300W	86.0092	275.00	**330.00**
600 x 803mm	446	1521	841	2868	600W	86.0095	348.00	**417.60**
600 x 1003mm	558	1903	1051	3584	900W	86.0098	421.00	**505.20**
600 x 1203mm	669	2282	1261	4301	1000W	86.0101	493.00	**591.60**
600 x 1403mm	781	2664	1471	5017	1200W	86.0479	566.00	**679.20**

Vesima Horizontal Aluminium Radiators - Matt Anthracite

Size H x W	Delta △T30 Watts	Delta △T30 BTU	Delta △T50 Watts	Delta △T50 BTU	Element Output	Code	£ Ex VAT	£ Inc VAT
600 x 503mm	279	952	526	1794	300W	86.0090	238.00	**285.60**
600 x 603mm	335	1143	631	2152	300W	86.0093	275.00	**330.00**
600 x 803mm	446	1521	841	2868	600W	86.0096	348.00	**417.60**
600 x 1003mm	558	1903	1051	3584	900W	86.0099	421.00	**505.20**
600 x 1203mm	669	2282	1261	4301	1000W	86.0102	493.00	**591.60**
600 x 1403mm	781	2664	1471	5017	1200W	86.0480	566.00	**679.20**

Vesima Horizontal Aluminium Radiators - Matt Black

Size H x W	Delta △T30 Watts	Delta △T30 BTU	Delta △T50 Watts	Delta △T50 BTU	Element Output	Code	£ Ex VAT	£ Inc VAT
600 x 503mm	279	952	526	1794	300W	86.0091	238.00	**285.60**
600 x 603mm	335	1143	631	2152	300W	86.0094	275.00	**330.00**
600 x 803mm	446	1521	841	2868	600W	86.0097	348.00	**417.60**
600 x 1003mm	558	1903	1051	3584	900W	86.0100	421.00	**505.20**
600 x 1203mm	669	2282	1261	4301	1000W	86.0103	493.00	**591.60**
600 x 1403mm	781	2664	1471	5017	1200W	86.0481	566.00	**679.20**

Prices include radiator and wall fixing sets, valves and accessories extra.

Matt White

Matt Anthracite

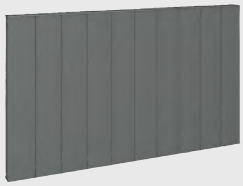

Matt Black

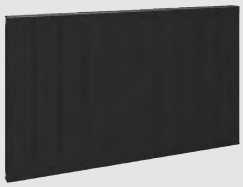

Vesima Cover Cap Sets

Cover cap sets only include cover caps for the top or bottom of the radiator.

TECHNICAL INFORMATION

All measurements in Height by Width. For matching valves see pages 338-353. Corrosion inhibitor must be added to the heating system and maintained. Flow diverter must only be fitted when radiator installed on central heating system. For indirect heating systems only. Tappings are the width of the rail and 60 or 80mm off the wall. Element can only be installed horizontally on the bottom header.

All Vesima models shown on this page are compatible with Element Type A, C and H

Pictured 86.0480 Matt Anthracite

Vesima Cover Cap Sets - Chrome

Description	Code	£ Ex VAT	£ Inc VAT
Cover Cap Set 503mm	86.0134	27.00	**32.40**
Cover Cap Set 603mm	86.0135	31.00	**37.20**
Cover Cap Set 803mm	86.0136	40.00	**48.00**
Cover Cap Set 1003mm	86.0137	48.00	**57.60**
Cover Cap Set 1203mm	86.0138	57.00	**68.40**
Cover Cap Set 1403mm	86.0487	65.00	**78.00**

Cover cap sets only include cover caps for the top or bottom of the radiator.

Radiator Valves
Page 338-353

For element types see pages 324-337.

Element can only be installed horizontally on the bottom header. Radiators that are electric only are restricted to the heat output of the elements (Type C&H up to 900 watts).

Aluminium Range

PRESTON VERTICAL

Pictured 89.0161 Matt White & 89.0164 Towel Hangers

Pictured 89.0793 Matt Black & 89.0164 Towel Hangers

A slimline radiator ideal for those situations where space is at a minimium. With the additional extra towel hangers this radiator is ideal for drying kitchen or bathroom towels. Available in three finishes.

FEATURES
- Excellent heat conductivity and lightweight
- Only requires a low water volume
- Heats up very quickly
- Radiators come with cover caps on top and bottom, same as radiator colour
- Tested to BS EN 442 standards
- 5 Year Manufacturer's Warranty*
- Can be single or dual fuel, or all electric

* With conditions

Technical Tables & Drawings
Page 418-419

Warranty 5 Year | Heating | All Electric | Dual-Fuel

Aluminium Range

PRESTON VERTICAL

Preston Aluminium Radiators - Matt White

Size H x W	Delta △T30 Watts	Delta △T30 BTU	Delta △T50 Watts	Delta △T50 BTU	Element Output	Code	£ Ex VAT	£ Inc VAT
1200 x 185mm	154	526	296	1010	150W	89.0791	197.00	**236.40**
1800 x 185mm	222	758	427	1457	300W	89.0161	213.00	**255.60**

Preston Aluminium Radiators - Matt Anthracite

Size H x W	Delta △T30 Watts	Delta △T30 BTU	Delta △T50 Watts	Delta △T50 BTU	Element Output	Code	£ Ex VAT	£ Inc VAT
1200 x 185mm	154	526	296	1010	150W	89.0792	197.00	**236.40**
1800 x 185mm	222	758	427	1457	300W	89.0162	213.00	**255.60**

Preston Aluminium Radiators - Matt Black

Size H x W	Delta △T30 Watts	Delta △T30 BTU	Delta △T50 Watts	Delta △T50 BTU	Element Output	Code	£ Ex VAT	£ Inc VAT
1200 x 185mm	154	526	296	1010	150W	89.0793	197.00	**236.40**
1800 x 185mm	222	758	427	1457	300W	89.0163	213.00	**255.60**

Prices include radiator and wall fixing sets, valves and accessories extra.

TECHNICAL INFORMATION

All measurements in Height by Width. For matching valves see pages 338-353. Corrosion inhibitor must be added to the heating system and maintained. Flow diverter must only be fitted when radiator installed on central heating system. For indirect heating systems only. Tappings are the width of the rail and 33 or 53mm off the wall.

All Preston models shown above are compatible with Element Type A, A+, F* and G* (*only if cable goes through the wall)

Preston Cover Cap Sets - Chrome

Cap Set Size	Code	£ Ex VAT	£ Inc VAT
185mm	89.0175	17.00	**20.40**

Cover cap set only includes cover caps for the top or bottom of the radiator.

Preston Standard Towel Hangers

Hanger Size	Colour	Code	£ Ex VAT	£ Inc VAT
185mm	Premium Mirror Polished	86.0207	67.00	**80.40**
185mm	Matt White	89.0204	54.00	**64.80**
185mm	Matt Anthracite	89.0205	54.00	**64.80**
185mm	Matt Black	89.0206	54.00	**64.80**
185mm	Chrome	89.0164	46.00	**55.20**

1800mm height radiator comes with 3 pre-drilled towel hanger locations, with a maximum of 3 towel hangers. 1200mm height radiators comes with 2 predrilled towel hanger locations, with a maximum of 2 towel hangers. The Preston Standard Towel Hangers will add approx. 23mm width on each side once fitted to the radiator. Premium mirror polished towel hanger is made of stainless steel. **Can be fitted after installation only on high adjustment bracket fitting.**

Premium
86.0207

Matt White
89.0204

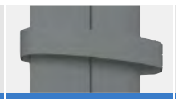

Matt Anthracite
89.0205

Matt Black
89.0206

Chrome
89.0164

Pictured 89.0162 Matt Anthracite with 89.0164 Towel Hangers x3 & 89.0175 Cover Caps x2

For element types see pages 324-337.

Element can only be installed vertically on the right-hand side on the bottom header. Radiators that are electric only are restricted to the heat output of the elements. Element size can be increased to full capacity of rail if using element type F or G. For dual fuel installations, element must be installed on flow side.

Round Vent Caps
Page 357

Aluminium Range

BERLINI VERTICAL

Pictured 86.0186 Polished Aluminium with 86.0110 Towel Hangers x3 & 86.0139 Cover Caps x2

Pictured 86.0107 Matt White with 86.0110 Towel Hangers

This slimline radiator will be an ideal solution for those tight spaces. The radiator looks stunning paired with the towel hangers to complete the look. Available in four finishes, this radiator heats up quickly and is lightweight.

FEATURES
- Excellent heat conductivity and lightweight
- Only requires a low water volume
- Heats up very quickly
- Radiators come with cover caps on top and bottom, same as radiator colour
- Tested to BS EN 442 standards
- 5 Year Manufacturer's Warranty*
- Can be single or dual fuel, or all electric

* With conditions

Technical Tables & Drawings
Page 418-419

Warranty 5 Year | Heating | All Electric | Dual-Fuel

Aluminium Range

BERLINI VERTICAL

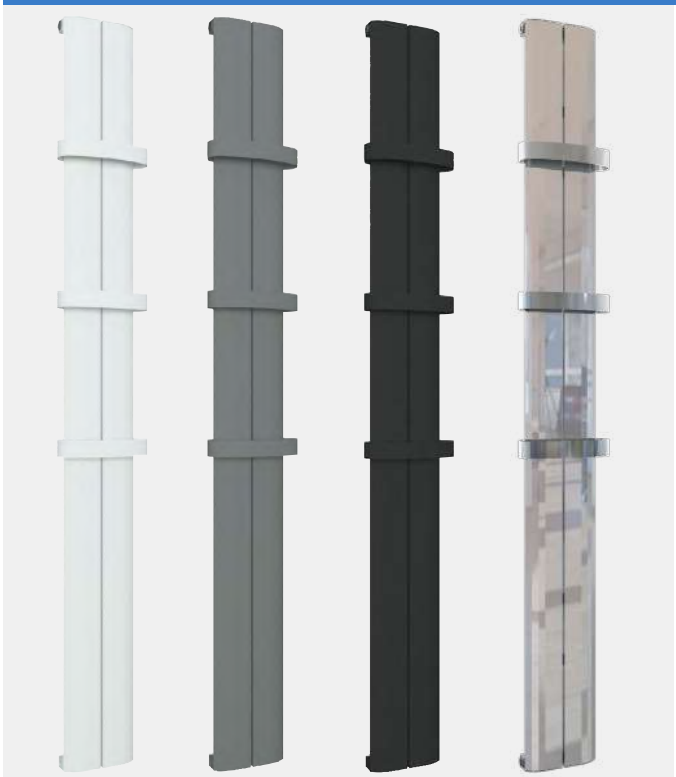

Matt White | Matt Anthracite | Matt Black | Polished

Pictured 86.0145 Matt Anthracite with 86.0139 Cover Caps x2

Berlini Aluminium Radiator - Matt White

Size H x W	Delta △T30 Watts	Delta △T30 BTU	Delta △T50 Watts	Delta △T50 BTU	Element Output	Code	£ Ex VAT	£ Inc VAT
1200 x 185mm	125	427	247	843	150W	86.0144	185.00	**222.00**
1800 x 185mm	275	938	508	1733	300W	86.0107	212.00	**254.40**

Berlini Aluminium Radiator - Matt Anthracite

Size H x W	Delta △T30 Watts	Delta △T30 BTU	Delta △T50 Watts	Delta △T50 BTU	Element Output	Code	£ Ex VAT	£ Inc VAT
1200 x 185mm	125	427	247	843	150W	86.0145	185.00	**222.00**
1800 x 185mm	275	938	508	1733	300W	86.0108	212.00	**254.40**

Berlini Aluminium Radiator - Matt Black

Size H x W	Delta △T30 Watts	Delta △T30 BTU	Delta △T50 Watts	Delta △T50 BTU	Element Output	Code	£ Ex VAT	£ Inc VAT
1200 x 185mm	125	427	247	843	150W	86.0146	185.00	**222.00**
1800 x 185mm	275	938	508	1733	300W	86.0109	212.00	**254.40**

Berlini Aluminium Radiator - Polished Aluminium

Size H x W	Delta △T30 Watts	Delta △T30 BTU	Delta △T50 Watts	Delta △T50 BTU	Element Output	Code	£ Ex VAT	£ Inc VAT
1200 x 185mm	118	403	233	795	150W	86.0185	208.00	**249.60**
1800 x 185mm	207	706	396	1351	300W	86.0186	238.00	**285.60**

Prices include radiator and wall fixing sets, valves and accessories extra.

TECHNICAL INFORMATION

All measurements in Height by Width. For matching valves see pages 338-353. Corrosion inhibitor must be added to the heating system and maintained. Flow diverter must only be fitted when radiator installed on central heating system. For indirect heating systems only. Tappings are the width of the rail and 33 or 53mm off the wall.

All Berlini models shown above are compatible with Element Type A and A+

For element types see pages 324-337.

Element can only be installed vertically on the right hand side on the bottom header. Radiators that are electric only are restricted to the heat output of the elements. For dual fuel installations, element must be installed on flow side.

Matt Black
89.0206

Chrome
86.0110

Matt White
89.0204

Matt Anthracite
89.0205

Premium Mirror Polished
86.0207

Berlini Standard Towel Hangers

Description	Colour	Code	£ Ex VAT	£ Inc VAT
Towel Hanger 185mm	Premium Mirror Polished	86.0207	67.00	**80.40**
Towel Hanger 185mm	Matt White	89.0204	54.00	**64.80**
Towel Hanger 185mm	Matt Anthracite	89.0205	54.00	**64.80**
Towel Hanger 185mm	Matt Black	89.0206	54.00	**64.80**
Towel Hanger 185mm	Chrome	86.0110	47.00	**56.40**

1800mm height radiator comes with 3 pre-drilled towel hanger locations, with a maximum of 3 towel hangers.1200mm height radiators comes with 2 pre-drilled towel hanger locations, with a maximum of 2 towel hangers. The Berlini Standard Towel Hangers will add approx 23mm width on each side once fitted to the radiator. **Can be fitted after installation only on high adjustment bracket fitting.**

Berlini Cover Cap Set - Chrome

Description	Code	£ Ex VAT	£ Inc VAT
Cover Cap Set 185mm	86.0139	17.00	**20.40**

Cover cap sets only include cover caps for the top or bottom of the radiator.

Aluminium Range

FAIRFORD VERTICAL

Pictured 89.0227 Matt Anthracite with 89.0320

This slimline radiator is an ideal solution for those tight or tall spaces. This wavy vertical panel design has a curved front that will provide a stylish warmth to any room. Available in two colours as well as horizontal and vertical designs.

FEATURES
- Excellent heat conductivity and lightweight
- Only requires a low water volume
- Heats up very quickly
- Radiators come with cover caps on top and bottom, same s radiator colour.
- Tested to BS EN 442 standards
- 5 Year Manufacturer's Warranty*
- Can be single or dual fuel, or all electric

* With conditions

Warranty 5 Year

Heating

Dual-Fuel

All Electric

Fairford Vertical Aluminium Radiators - Matt White

Size H x W	Delta △T30 Watts	Delta △T30 BTU	Delta △T50 Watts	Delta △T50 BTU	Element Output	Code	£ Ex VAT	£ Inc VAT
1200 x 375mm	302	1030	596	2033	450W	89.0221	398.00	**477.60**
1200 x 565mm	454	1549	897	3059	750W	89.0737	565.00	**678.00**
1800 x 375mm	449	1532	892	3042	750W	89.0222	460.00	**552.00**
1800 x 565mm	676	2306	1343	4580	1000W	89.0735	656.00	**787.20**

Fairford Vertical Aluminium Radiators - Matt Anthracite

Size H x W	Delta △T30 Watts	Delta △T30 BTU	Delta △T50 Watts	Delta △T50 BTU	Element Output	Code	£ Ex VAT	£ Inc VAT
1200 x 375mm	302	1030	596	2033	450W	89.0227	398.00	**477.60**
1200 x 565mm	454	1549	897	3059	750W	89.0738	565.00	**678.00**
1800 x 375mm	449	1532	892	3042	750W	89.0228	460.00	**552.00**
1800 x 565mm	676	2306	1343	4580	1000W	89.0736	656.00	**787.20**

Prices include radiator and wall fixing sets, valves and accessories extra.

All Fairford models shown above are compatible with Element Type A, A+, F* and G* (*only if cable goes through the wall)

For element types see pages 324-337.

Element can only be installed vertically on the right-hand or left-hand side on the bottom header. Radiators that are electric only are restricted to the heat output of the elements. Element size can be increased to full capacity of rail if using element type F or G. For dual fuel installations, element must be installed on flow side.

FAIRFORD VERTICAL COVER CAPS

Fairford Cover Caps - Chrome

Description	Code	£ Ex VAT	£ Inc VAT
Cover Cap 375mm	89.0399	21.00	**25.20**
Cover Cap 565mm	89.0400	28.00	**33.60**

Cover cap set only includes cover caps for the top or bottom of the radiator.

FAIRFORD TOWEL HANGERS (VERTICAL & HORIZONTAL)

Towel Hanger - Matt White

Size	Code	£ Ex VAT	£ Inc VAT
375mm	89.0318	56.00	**67.20**
565mm	89.0319	70.00	**84.00**

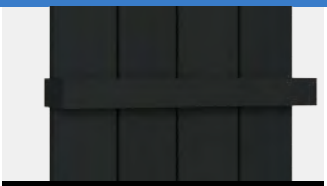

Towel Hanger - Matt Anthracite

Size	Code	£ Ex VAT	£ Inc VAT
375mm	89.0320	56.00	**67.20**
565mm	89.0321	70.00	**84.00**

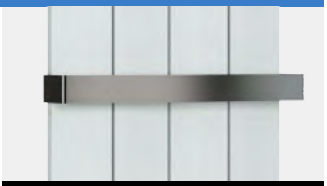

Towel Hanger - Chrome

Size	Code	£ Ex VAT	£ Inc VAT
375mm	89.0322	56.00	**67.20**
565mm	89.0323	70.00	**84.00**

1800mm height radiators come with 3 pre-drilled towel hanger locations, with a maximum of 3 towel hangers.

1200mm height radiators come with 2 pre-drilled towel hanger locations, with a maximum of 2 towel hangers.

600mm height radiators come with 1 pre-drilled towel hanger location, with a maximum of 1 towel hanger. (only 375 and 565mm widths)

Can be fitted after installation only on high adjustment bracket fitting.

The Fairford Standard Towel Hangers will add approx 8mm width on each side once fitted to the radiator.

Aluminium Range

FAIRFORD HORIZONTAL

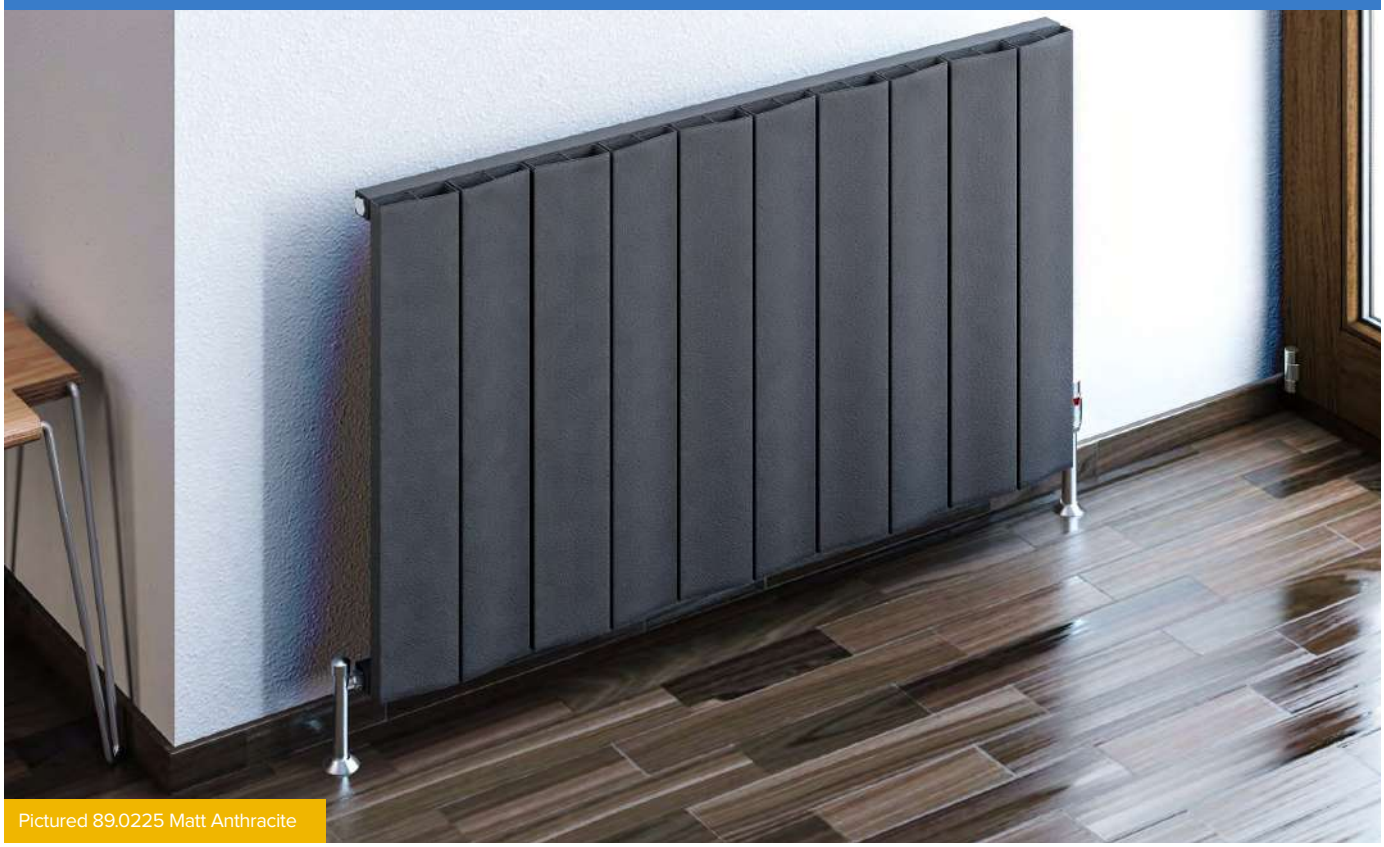

Pictured 89.0225 Matt Anthracite

This modern radiator has a wavy front design that will provide a stylish warmth to any room. Available in two colours as well as horizontal and vertical designs.

Fairford Horizontal Aluminium Radiators - Matt White

Size H x W	Delta △T30 Watts	Delta △T30 BTU	Delta △T50 Watts	Delta △T50 BTU	Element Output	Code	£ Ex VAT	£ Inc VAT
600 x 375mm	157	536	308	1051	300W	89.0217	231.00	**277.20**
600 x 565mm	236	805	464	1583	300W	89.0218	324.00	**388.80**
600 x 945mm	395	1347	775	2643	600W	89.0219	531.00	**637.20**
600 x 1325mm	553	1886	1086	3704	900W	89.0220	731.00	**877.20**

Fairford Horizontal Aluminium Radiators - Matt Anthracite

Size H x W	Delta △T30 Watts	Delta △T30 BTU	Delta △T50 Watts	Delta △T50 BTU	Element Output	Code	£ Ex VAT	£ Inc VAT
600 x 375mm	157	536	308	1051	300W	89.0223	231.00	**277.20**
600 x 565mm	236	805	464	1583	300W	89.0224	324.00	**388.80**
600 x 945mm	395	1347	775	2643	600W	89.0225	531.00	**637.20**
600 x 1325mm	553	1886	1086	3704	900W	89.0226	731.00	**877.20**

Prices include radiator and wall fixing sets, valves and accessories extra.

All Fairford models shown above are compatible with Element Type A, A+,C and H (except 600x375mm size Type A and A+)

FEATURES

- Excellent heat conductivity and lightweight
- Only requires a low water volume
- Heats up very quickly
- Radiators come with cover caps on top and bottom, same as radiator colour
- Tested to BS EN 442 standards
- 5 Year Manufacturer's Warranty*
- Can be single or dual fuel, or all electric

* With conditions

Technical Tables & Drawings
Page 420-421

TECHNICAL INFORMATION

All measurements in Height by Width. For matching valves see pages 338-353. Corrosion inhibitor must be added to the heating system and maintained. Flow diverter must only be fitted when radiator installed on central heating system. For indirect heating systems only. Tappings are the width of the rail and 33 or 53mm off the wall.

For element types see pages 324-337.

Element can only be installed horizontally on the bottom header. Radiators that are electric only are restricted to the heat output of the elements (Type C&H up to 900 watts).

FAIRFORD HORIZONTAL COVER CAPS

Fairford Cover Cap Set - Chrome

Description	Code	£ Ex VAT	£ Inc VAT
Cover Cap 375mm	89.0399	21.00	**25.20**
Cover Cap 565mm	89.0400	28.00	**33.60**
Cover Cap 945mm	89.0401	37.00	**44.40**
Cover Cap 1325mm	89.0402	50.00	**60.00**

Cover cap set only includes cover caps for the top or bottom of the radiator.

Warranty 5 Year | Heating | All Electric | Dual-Fuel

Aluminium Range

BURFORD VERTICAL

Pictured 89.0236 Matt White with 89.0342 Towel Hangers

Burford aluminium radiator would be an ideal solution for those tight or tall spaces. This design has round vertical panels that will provide a stylish warmth to any room. Available in two colours as well as horizontal and vertical designs.

FEATURES
- Excellent heat conductivity and lightweight
- Only requires a low water volume
- Heats up very quickly
- Radiators come with cover caps on top and bottom, same as radiator colour.
- Tested to BS EN 442 standards
- 5 Year Manufacturer's Warranty*
- Can be single or dual fuel, or all electric

* With conditions

Warranty 5 Year

Heating

Dual-Fuel

All Electric

Matt White

Burford Vertical Aluminium Radiators - Matt White 1800mm Height

Width	Delta △T30 Watts	Delta △T30 BTU	Delta △T50 Watts	Delta △T50 BTU	Element Output	Element Type	Code	£ Ex VAT	£ Inc VAT
275mm	373	1272	756	2578	600W	A, A+, B, F, G	89.0234	434.00	**520.80**
345mm	464	1583	939	3202	750W	A, A+, B, F, G	89.0235	519.00	**622.80**
415mm	553	1886	1122	3827	1000W	A, A+, B, F, G	89.0236	618.00	**741.60**
485mm	643	2193	1302	4440	1200W	A, A+, B, F, G	89.0237	711.00	**853.20**

Matt Anthracite

Burford Vertical Aluminium Radiators - Matt Anthracite 1800mm Height

Width	Delta △T30 Watts	Delta △T30 BTU	Delta △T50 Watts	Delta △T50 BTU	Element Output	Element Type	Code	£ Ex VAT	£ Inc VAT
275mm	373	1272	756	2578	600W	A, A+, B, F, G	89.0243	434.00	**520.80**
345mm	464	1583	939	3202	750W	A, A+, B, F, G	89.0244	519.00	**622.80**
415mm	553	1886	1122	3827	1000W	A, A+, B, F, G	89.0245	618.00	**741.60**
485mm	643	2193	1302	4440	1200W	A, A+, B, F, G	89.0246	711.00	**853.20**

Prices include radiator and wall fixing sets, valves and accessories extra.

All Burford models shown above are compatible with Element Type A, A+, F* and G* (*only if cable goes through the wall)

BURFORD VERTICAL COVER CAPS

Burford Cover Caps - Chrome

Description	Code	£ Ex VAT	£ Inc VAT
Cover Cap 275mm	89.0403	23.00	**27.60**
Cover Cap 345mm	89.0404	26.00	**31.20**
Cover Cap 415mm	89.0405	30.00	**36.00**
Cover Cap 485mm	89.0406	32.00	**38.40**

Cover cap set only includes cover caps for the top or bottom of the radiator.

For element types see pages 324-337.

Element can only be installed vertically on the right-hand or left-hand side on the bottom header. Radiators that are electric only are restricted to the heat output of the elements. Element size can be increased to full capacity of rail if using element type F or G. For dual fuel installations, element must be installed on flow side.

BURFORD TOWEL HANGERS (VERTICAL & HORIZONTAL)

Towel Hanger - Matt White

Size	Code	£ Ex VAT	£ Inc VAT
275mm	89.0330	54.00	**64.80**
345mm	89.0331	56.00	**67.20**
415mm	89.0332	63.00	**75.60**
485mm	89.0333	73.00	**87.60**
625mm	89.0334	83.00	**99.60**

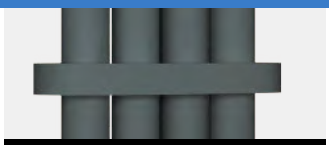

Towel Hanger - Matt Anthracite

Size	Code	£ Ex VAT	£ Inc VAT
275mm	89.0335	54.00	**64.80**
345mm	89.0336	56.00	**67.20**
415mm	89.0337	63.00	**75.60**
485mm	89.0338	73.00	**87.60**
625mm	89.0339	83.00	**99.60**

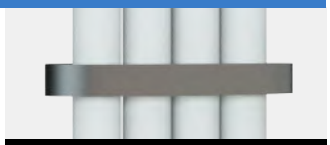

Towel Hanger - Chrome

Size	Code	£ Ex VAT	£ Inc VAT
275mm	89.0340	54.00	**64.80**
345mm	89.0341	56.00	**67.20**
415mm	89.0342	63.00	**75.60**
485mm	89.0343	73.00	**87.60**
625mm	89.0344	83.00	**99.60**

600mm height radiators have 1 pre-drilled location and fit 1 towel hanger (only for 485mm and 625mm widths).

1800mm height radiators have 3 pre-drilled locations and fit up to 3 hangers (for all widths: 275mm, 345mm, 415mm, 485mm).

Standard Towel Hangers are **compatible with vertical and horizontal radiators,** depending on their widths. **Can be fitted post-installation on high adjustment brackets.**

The Burford Standard Towel Hangers add approximately 50mm of width on each side once attached.

Aluminium Range

BURFORD HORIZONTAL

Pictured 89.0241 Matt Anthracite

Burford aluminium radiator would be an ideal solution for those tight or tall spaces. This design has round vertical panels that will provide a stylish warmth to any room. Available in two colours as well as horizontal and vertical designs.

Matt White

Burford Horizontal Aluminium Radiators - Matt White 600mm Height

Width	Delta △T30 Watts	Delta △T30 BTU	Delta △T50 Watts	Delta △T50 BTU	Element Output	Element Type	Code	£ Ex VAT	£ Inc VAT
485mm	246	839	478	1630	300W	A, A+, C, H	89.0229	369.00	**442.80**
625mm	313	1068	609	2077	450W	A, A+, C, H	89.0230	460.00	**552.00**
835mm	414	1412	804	2742	600W	A, A+, C, H	89.0231	609.00	**730.80**
1045mm	513	1750	997	3400	750W	A, A+, C, H	89.0232	750.00	**900.00**
1185mm	579	1975	1125	3837	900W	A, A+, C, H	89.0233	840.00	**1008.00**

Matt Anthracite

Burford Horizontal Aluminium Radiators - Matt Anthracite 600mm Height

Width	Delta △T30 Watts	Delta △T30 BTU	Delta △T50 Watts	Delta △T50 BTU	Element Output	Element Type	Code	£ Ex VAT	£ Inc VAT
485mm	246	839	478	1630	300W	A, A+, C, H	89.0238	369.00	**442.80**
625mm	313	1068	609	2077	450W	A, A+, C, H	89.0239	460.00	**552.00**
835mm	414	1412	804	2742	600W	A, A+, C, H	89.0240	609.00	**730.80**
1045mm	513	1750	997	3400	750W	A, A+, C, H	89.0241	750.00	**900.00**
1185mm	579	1975	1125	3837	900W	A, A+, C, H	89.0242	840.00	**1008.00**

Prices include radiator and wall fixing sets, valves and accessories extra.

BURFORD HORIZONTAL COVER CAPS

Burford Cover Caps - Chrome

Description	Code	£ Ex VAT	£ Inc VAT
Cover Cap 485mm	89.0406	32.00	**38.40**
Cover Cap 625mm	89.0407	35.00	**42.00**
Cover Cap 835mm	89.0408	45.00	**54.00**
Cover Cap 1045mm	89.0409	52.00	**62.40**
Cover Cap 1185mm	89.0410	56.00	**67.20**

Cover cap set only includes cover caps for the top or bottom of the radiator.

FEATURES

- Excellent heat conductivity and lightweight
- Only requires a low water volume
- Heats up very quickly
- Radiators come with cover caps on top and bottom, same as radiator colour
- Tested to BS EN 442 standards
- 5 Year Manufacturer's Warranty*
- Can be single or dual fuel, or all electric

* With conditions

Technical Tables & Drawings
Page 420-421

TECHNICAL INFORMATION (vertical & horizontal sizes)

All measurements in Height by Width. For matching valves see pages 338-353. Corrosion inhibitor must be added to the heating system and maintained. Flow diverter must only be fitted when radiator installed on central heating system. For indirect heating systems only. Tappings are the width of the rail and 33 or 53mm off the wall.

For element types see pages 324-337.

Element can only be installed horizontally on the bottom header. Radiators that are electric only are restricted to the heat output of the elements (Type C&H up to 900 watts).

Warranty 5 Year | Heating | All Electric | Dual-Fuel

Aluminium Range

KELMSCOTT VERTICAL

Pictured 89.0262 Matt Anthracite with 89.0351 Towel Hangers

This slimline radiator would be an ideal solution for those tight or tall spaces. This design has a curved front that will provide a stylish warmth to any room. Available in two colours as well as horizontal and vertical designs.

FEATURES
- Excellent heat conductivity and lightweight
- Only requires a low water volume
- Heats up very quickly
- Radiators come with cover caps on top and bottom, same as radiator colour.
- Tested to BS EN 442 standards
- 5 Year Manufacturer's Warranty*
- Can be single or dual fuel, or all electric

* With conditions

Warranty 5 Year

Heating

Dual-Fuel

All Electric

Matt White

Kelmscott Vertical Aluminium Radiators - Matt White 1800mm Height

Width	Delta △T30 Watts	Delta △T30 BTU	Delta △T50 Watts	Delta △T50 BTU	Element Output	Element Type	Code	£ Ex VAT	£ Inc VAT
275mm	360	1228	740	2524	600W	A, A+, B, F, G	89.0252	415.00	**498.00**
345mm	450	1535	924	3151	750W	A, A+, B, F, G	89.0253	500.00	**600.00**
415mm	538	1835	1107	3775	1000W	A, A+, B, F, G	89.0254	592.00	**710.40**
485mm	627	2139	1289	4396	1200W	A, A+, B, F, G	89.0255	682.00	**818.40**

Matt Anthracite

Kelmscott Vertical Aluminium Radiators - Matt Anthracite 1800mm Height

Width	Delta △T30 Watts	Delta △T30 BTU	Delta △T50 Watts	Delta △T50 BTU	Element Output	Element Type	Code	£ Ex VAT	£ Inc VAT
275mm	360	1228	740	2524	600W	A, A+, B, F, G	89.0261	415.00	**498.00**
345mm	450	1535	924	3151	750W	A, A+, B, F, G	89.0262	500.00	**600.00**
415mm	538	1835	1107	3775	1000W	A, A+, B, F, G	89.0263	592.00	**710.40**
485mm	627	2139	1289	4396	1200W	A, A+, B, F, G	89.0264	682.00	**818.40**

Prices include radiator and wall fixing sets, valves and accessories extra.

All Kelmscott models shown above are compatible with Element Type A, A+, F* and G* (*only if cable goes through the wall)

KELMSCOTT VERTICAL COVER CAPS

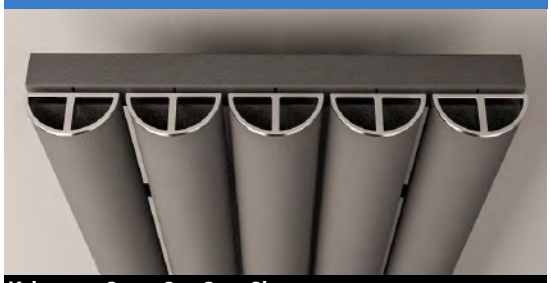

Kelmscott Cover Cap Set - Chrome

Description	Code	£ Ex VAT	£ Inc VAT
Cover Cap 275mm	89.0411	21.00	**25.20**
Cover Cap 345mm	89.0412	24.00	**28.80**
Cover Cap 415mm	89.0413	26.00	**31.20**
Cover Cap 485mm	89.0414	30.00	**36.00**

Cover cap set only includes cover caps for the top or bottom of the radiator.

For element types see pages 324-337.

Element can only be installed vertically on the right-hand or left-hand side on the bottom header. Radiators that are electric only are restricted to the heat output of the elements. Element size can be increased to full capacity of rail if using element type F or G. For dual fuel installations, element must be installed on flow side.

KELMSCOTT TOWEL HANGERS (VERTICAL & HORIZONTAL)

Towel Hanger - Matt White

Size	Code	£ Ex VAT	£ Inc VAT
275mm	89.0345	52.00	**62.40**
345mm	89.0346	53.00	**63.60**
415mm	89.0347	56.00	**67.20**
485mm	89.0348	69.00	**82.80**
625mm	89.0349	78.00	**93.60**

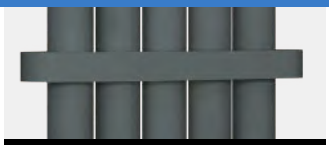

Towel Hanger - Matt Anthracite

Size	Code	£ Ex VAT	£ Inc VAT
275mm	89.0350	52.00	**62.40**
345mm	89.0351	53.00	**63.60**
415mm	89.0352	56.00	**67.20**
485mm	89.0353	69.00	**82.80**
625mm	89.0354	78.00	**93.60**

Towel Hanger - Chrome

Size	Code	£ Ex VAT	£ Inc VAT
275mm	89.0355	52.00	**62.40**
345mm	89.0356	53.00	**63.60**
415mm	89.0357	56.00	**67.20**
485mm	89.0358	69.00	**82.80**
625mm	89.0359	78.00	**93.60**

600mm height radiators have 1 pre-drilled location and fit 1 towel hanger (only for 485mm and 625mm widths).

1800mm height radiators come with 3 pre-drilled towel hanger locations, with a maximum of 3 towel hangers. (all widths; 275, 345, 415 and 485mm)

Standard Towel Hangers are **compatible with vertical and horizontal radiators,** depending on their widths. **Can be fitted post-installation on high adjustment brackets.**

The Kelmscott Standard Towel Hangers add approximately 43mm of width on each side once attached.

Aluminium Range

KELMSCOTT HORIZONTAL

Pictured 89.0250 Matt White

This modern radiator has a curved front design that will provide a stylish warmth to any room. Available in two colours as well as horizontal and vertical designs.

Matt White

Kelmscott Horizontal Aluminium Radiators - Matt White 600mm Height

Width	Delta △T30 Watts	Delta △T30 BTU	Delta △T50 Watts	Delta △T50 BTU	Element Output	Element Type	Code	£ Ex VAT	£ Inc VAT
485mm	245	836	476	1624	300W	A, A+, C, H	89.0247	350.00	**420.00**
625mm	314	1071	610	2081	450W	A, A+, C, H	89.0248	441.00	**529.20**
835mm	417	1422	809	2759	600W	A, A+, C, H	89.0249	583.00	**699.60**
1045mm	519	1770	1008	3438	750W	A, A+, C, H	89.0250	722.00	**866.40**
1185mm	587	2002	1140	3888	900W	A, A+, C, H	89.0251	807.00	**968.40**

Matt Anthracite

Kelmscott Horizontal Aluminium Radiators - Matt Anthracite 600mm Height

Width	Delta △T30 Watts	Delta △T30 BTU	Delta △T50 Watts	Delta △T50 BTU	Element Output	Element Type	Code	£ Ex VAT	£ Inc VAT
485mm	245	836	476	1624	300W	A, A+, C, H	89.0256	350.00	**420.00**
625mm	314	1071	610	2081	450W	A, A+, C, H	89.0257	441.00	**529.20**
835mm	417	1422	809	2759	600W	A, A+, C, H	89.0258	583.00	**699.60**
1045mm	519	1770	1008	3438	750W	A, A+, C, H	89.0259	722.00	**866.40**
1185mm	587	2002	1140	3888	900W	A, A+, C, H	89.0260	807.00	**968.40**

Prices include radiator and wall fixing sets, valves and accessories extra.

FEATURES

- Excellent heat conductivity and lightweight
- Only requires a low water volume
- Heats up very quickly
- Radiators come with cover caps on top and bottom, same as radiator colour
- Tested to BS EN 442 standards
- 5 Year Manufacturer's Warranty*
- Can be single or dual fuel, or all electric

* With conditions

Technical Tables & Drawings
Page 422-423

TECHNICAL INFORMATION (vertical & horizontal sizes)

All measurements in Height by Width. For matching valves see pages 338-353. Corrosion inhibitor must be added to the heating system and maintained. Flow diverter must only be fitted when radiator installed on central heating system. For indirect heating systems only. Tappings are the width of the rail and 33 or 53mm off the wall.

For element types see pages 324-337.

Element can only be installed horizontally on the bottom header. Radiators that are electric only are restricted to the heat output of the elements (Type C&H up to 900 watts).

KELMSCOTT HORIZONTAL COVER CAPS

Kelmscott Cover Caps - Chrome

Description	Code	£ Ex VAT	£ Inc VAT
Cover Cap 485mm	89.0414	30.00	**36.00**
Cover Cap 625mm	89.0415	34.00	**40.80**
Cover Cap 835mm	89.0416	41.00	**49.20**
Cover Cap 1045mm	89.0417	47.00	**56.40**
Cover Cap 1185mm	89.0418	52.00	**62.40**

Cover cap set only includes cover caps for the top or bottom of the radiator.

Warranty 5 Year | Heating | All Electric | Dual-Fuel

Aluminium Range

WITNEY VERTICAL

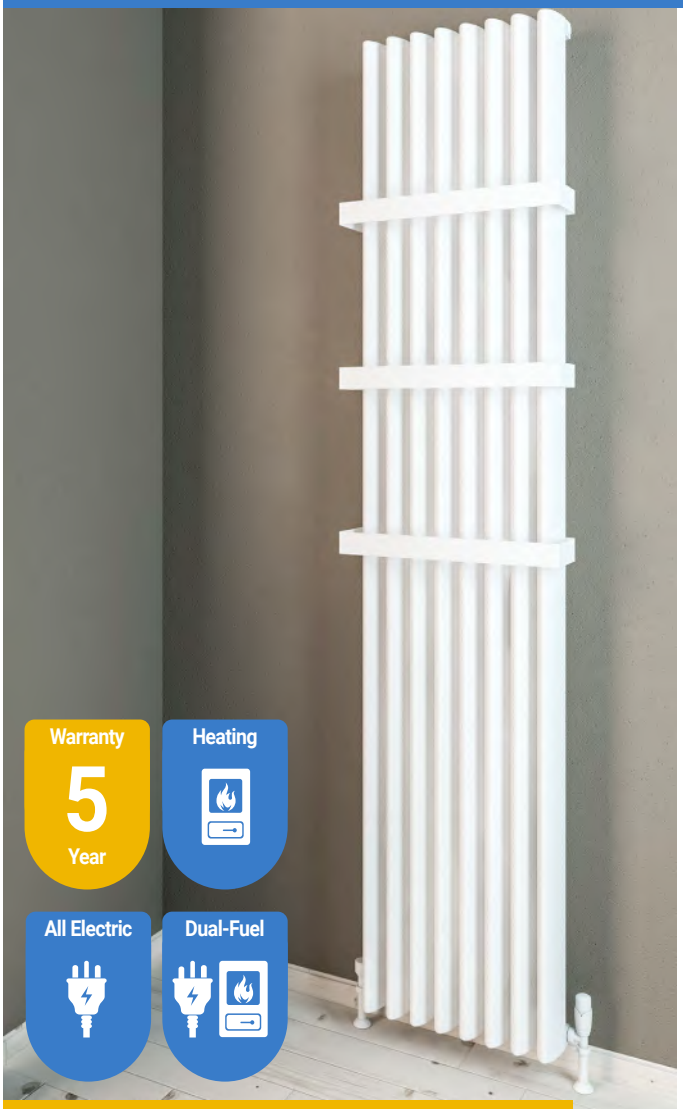

Pictured 89.0266 Matt White with 89.0361 Towel Hangers x3

A high heat capacity vertical radiator ideal for those situations where space is at a minimium. Available in two finishes, three widths and one height.

Witney Vertical Aluminium Radiators - Matt White

Size H x W	Delta △T30 Watts	Delta △T30 BTU	Delta △T50 Watts	Delta △T50 BTU	Element Output	Code	£ Ex VAT	£ Inc VAT
1800 x 280mm	503	1716	985	3359	750W	89.0265	586.00	**703.20**
1800 x 375mm	662	2258	1297	4423	1000W	89.0266	772.00	**926.40**
1800 x 470mm	819	2793	1604	5470	1200W	89.0267	930.00	**1116.00**

Witney Vertical Aluminium Radiators - Matt Anthracite

Size H x W	Delta △T30 Watts	Delta △T30 BTU	Delta △T50 Watts	Delta △T50 BTU	Element Output	Code	£ Ex VAT	£ Inc VAT
1800 x 280mm	503	1716	985	3359	750W	89.0268	586.00	**703.20**
1800 x 375mm	662	2258	1297	4423	1000W	89.0269	772.00	**926.40**
1800 x 470mm	819	2793	1604	5470	1200W	89.0270	930.00	**1116.00**

Prices include radiator and wall fixing sets, valves and accessories extra.

FEATURES

- Excellent heat conductivity and lightweight
- Only requires a low water volume
- Heats up very quickly
- Radiators come with cover caps on top and bottom, same as radiator colour
- Tested to BS EN 442 standards
- 5 Year Manufacturer's Warranty*
- Can be single or dual fuel, or all electric

* With conditions

All Witney models shown above are compatible with Element Type A, A+, F* and G* (*only if cable goes through the wall)

TECHNICAL INFORMATION

All measurements in Height by Width. For matching valves see pages 338-353. Corrosion inhibitor must be added to the heating system and maintained. Flow diverter must only be fitted when radiator installed on central heating system. For indirect heating systems only. Tappings are the width of the rail and 33 or 53mm off the wall.

Witney Cover Cap Set - Chrome

Description	Code	£ Ex VAT	£ Inc VAT
Cover Cap 280mm	89.0419	32.00	**38.40**
Cover Cap 375mm	89.0420	38.00	**45.60**
Cover Cap 470mm	89.0421	46.00	**55.20**

Cover cap set only includes cover caps for the top or bottom of the radiator.

For element types see pages 324-337.

Element can only be installed vertically on the right-hand or left-hand side on the bottom header. Radiators that are electric only are restricted to the heat output of the elements. For dual fuel installations, element must be installed on flow side.

WITNEY STANDARD TOWEL HANGERS

1800mm height radiators come with 3 pre-drilled towel hanger locations, with a maximum of 3 towel hangers. (all widths; 280, 375 and 470mm)

Can be fitted after installation only on high adjustment bracket fitting.

The Witney Towel Hangers will add approx 8mm width on each side once fitted to the radiator.

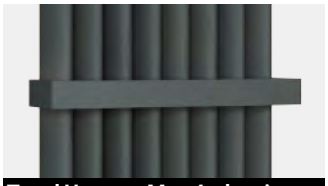

Towel Hanger - Matt Anthracite

Size	Code	£ Ex VAT	£ Inc VAT
280mm	89.0363	62.00	**74.40**
375mm	89.0364	66.00	**79.20**
470mm	89.0365	74.00	**88.80**

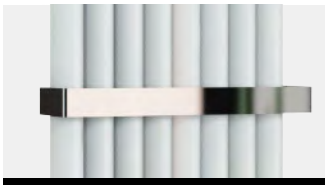

Towel Hanger - Chrome

Size	Code	£ Ex VAT	£ Inc VAT
280mm	89.0366	62.00	**74.40**
375mm	89.0367	66.00	**79.20**
470mm	89.0368	74.00	**88.80**

Towel Hanger - Matt White

Size	Code	£ Ex VAT	£ Inc VAT
280mm	89.0360	62.00	**74.40**
375mm	89.0361	66.00	**79.20**
470mm	89.0362	74.00	**88.80**

Technical Tables & Drawings
Page 422-423

Radiator Valves
Page 338-353

Aluminium Range

WITNEY HORIZONTAL

Pictured 89.0943 Matt White

Pictured 89.0978 Matt Anthracite

A high heat capacity horizontal radiator that will provide a stylish warmth to any room. Available in two finishes and five widths.

Witney Horizontal Aluminium Radiators - Matt White

Size H x W	Delta △T30		Delta △T50		Element Output	Code	£ Ex VAT	£ Inc VAT
	Watts	BTU	Watts	BTU				
600 x 470mm	328	1119	646	2203	300W	89.0941	522.00	**626.40**
600 x 660mm	451	1538	889	3032	600W	89.0942	723.00	**867.60**
600 x 850mm	573	1954	1128	3847	900W	89.0943	920.00	**1104.00**
600 x 1040mm	692	2360	1364	4652	1000W	89.0944	1116.00	**1339.20**
600 x 1230mm	811	2766	1597	5446	1200W	89.0945	1305.00	**1566.00**

Witney Horizontal Aluminium Radiators - Matt Anthracite

Size H x W	Delta △T30		Delta △T50		Element Output	Code	£ Ex VAT	£ Inc VAT
	Watts	BTU	Watts	BTU				
600 x 470mm	328	1119	646	2203	300W	89.0974	522.00	**626.40**
600 x 660mm	451	1538	889	3032	600W	89.0975	723.00	**867.60**
600 x 850mm	573	1954	1128	3847	900W	89.0976	920.00	**1104.00**
600 x 1040mm	692	2360	1364	4652	1000W	89.0977	1116.00	**1339.20**
600 x 1230mm	811	2766	1597	5446	1200W	89.0978	1305.00	**1566.00**

Prices include radiator and wall fixing sets, valves and accessories extra.

FEATURES

- Excellent heat conductivity and lightweight
- Only requires a low water volume
- Heats up very quickly
- Radiators come with cover caps on top and bottom, same as radiator colour
- Tested to BS EN 442 standards
- 5 Year Manufacturer's Warranty*
- Can be single or dual fuel, or all electric

* With conditions

All Witney models shown above are compatible with Element Type A, A+, C and H

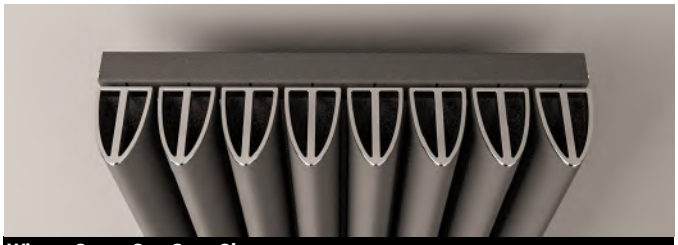

Witney Cover Cap Set - Chrome

Description	Code	£ Ex VAT	£ Inc VAT
Cover Cap 470mm	89.0421	46.00	**55.20**
Cover Cap 660mm	89.1407	60.00	**72.00**
Cover Cap 850mm	89.1408	74.00	**88.80**
Cover Cap 1040mm	89.1409	91.00	**109.20**
Cover Cap 1230mm	89.1410	108.00	**129.60**

Cover cap set only includes cover caps for the top or bottom of the radiator.

For element types see pages 324-337.

Element can only be installed horizontally on the bottom header. Radiators that are electric only are restricted to the heat output of the elements (Type C&H up to 900 watts).

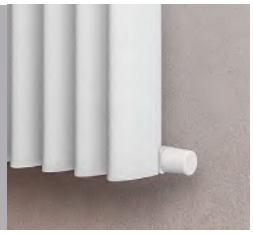

Technical Tables & Drawings
Page 422-423

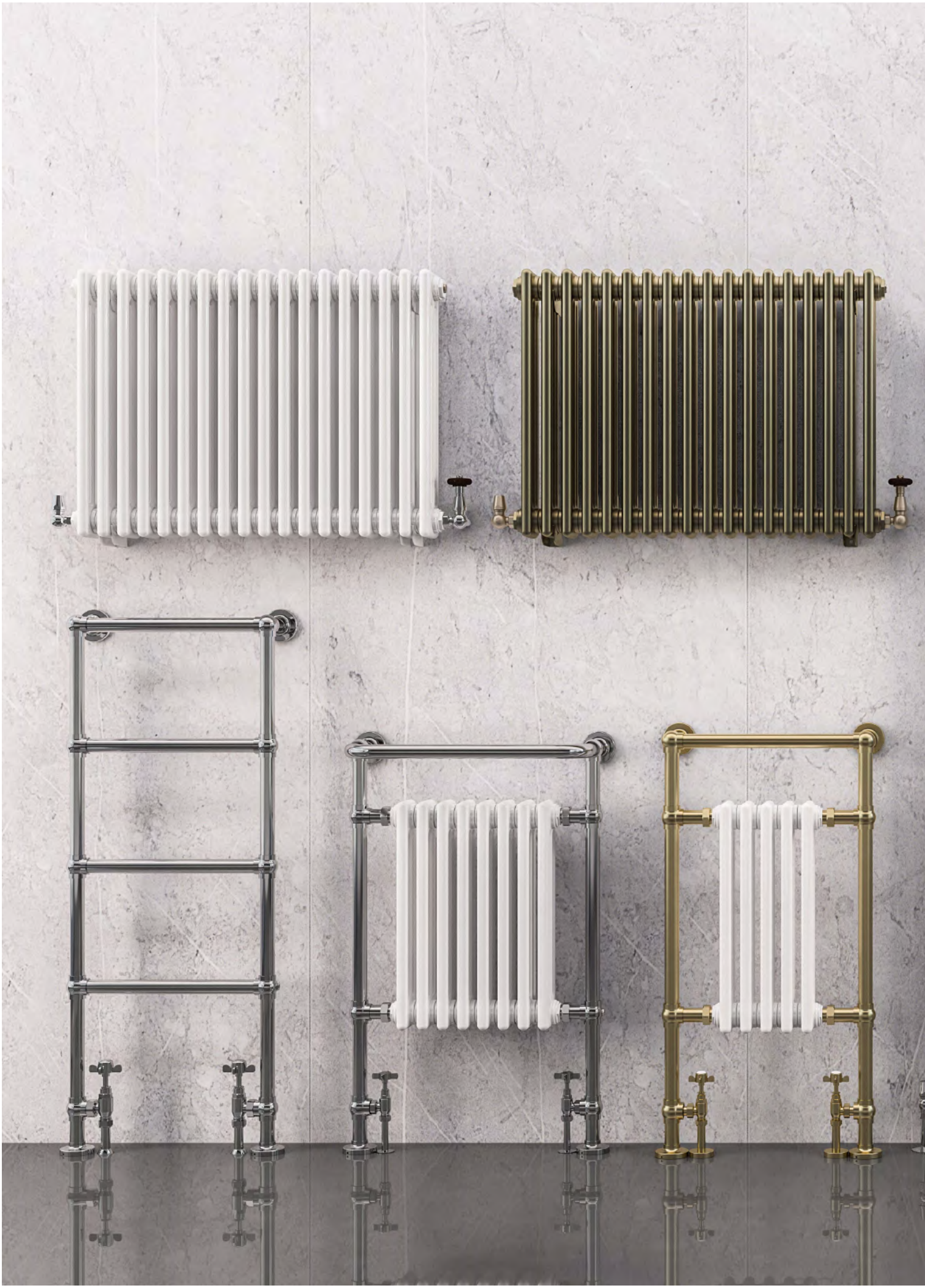

Traditional Range

Our traditional range of radiators offer character and flair to ensure they fit in with your classic designs. Most of these radiators and towel rails can be powered via dual fuel, single fuel and / or all electric.

Contents

Windrush, Chrome	278
Stour, Available in 5 colours	279-281
Thames, Chrome / Gloss White	282
Leadon, Chrome / Gloss White	283
Coln, Chrome / Gloss White	284
Twyver, Chrome / Gloss White	285
Avon, Available in 4 colours	286-287
Isbourne, Available in 5 colours	288-289
Imperia 2 Column, Available in 4 colours	290-296
Imperia 3 Column, Available in 4 colours	297-303
Imperia 4 Column, Available in 3 colours	304-305
Imperia 6 Column, Available in 3 colours	306-308
Imperia 6 Column Bench, Available in 3 colours	309
Imperia Multirail 2 Column, Available in 3 colours	310-311
Rivassa 2 Column, Available in 5 colours	312-315
Rivassa 3 Column, Available in 5 colours	316-319
Rivassa 4 Column, Available in 3 colours	320-321

Traditional Range

WINDRUSH

Pictured 41.1009 Chrome

Pictured 41.1016 Chrome

Pictured 41.1014 Chrome

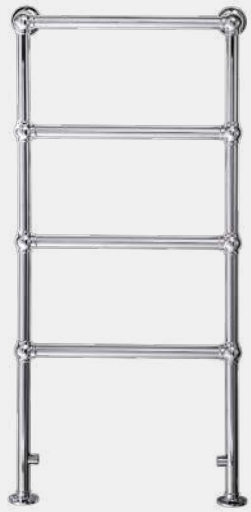

Our traditional range of radiators offer character and flair to ensure they fit in with your classic designs. The Windrush is a simple, traditional design that will add a vintage feel to your bathroom.

Windrush - Chrome

Size H x W	Delta △T30		Delta △T50		Element Output	Code	£ Ex VAT	£ Inc VAT
	Watts	BTU	Watts	BTU				
950 x 500mm	74	253	137	468	100W	41.1009	323.00	**387.60**
950 x 600mm	75	256	139	474	100W	41.1003	345.00	**414.00**
1195 x 500mm	93	318	176	601	150W	41.1014	349.00	**418.80**
1195 x 600mm	101	345	189	645	150W	41.1015	369.00	**442.80**
1550 x 500mm	117	399	223	761	150W	41.1016	423.00	**507.60**
1550 x 600mm	126	430	237	809	150W	41.1017	441.00	**529.20**

FEATURES

- Can be single, dual fuel or all electric
- Tested to BS EN 442 standards
- 5 Year Manufacturer's Warranty*

* With conditions

All Windrush models shown above are compatible with Element Type A, A+ and E (except 950x500 & 950X600mm sizes Type A and A+)

TECHNICAL INFORMATION

All measurements in Height by Width. Radiators that are electric only are restricted to the heat output of the elements. Element size can be increased to full capacity of rail if using element type E. For element types see pages 324-337. For matching valves see pages 338-353. For indirect heating systems only. Tappings are approx. 130mm less than the width of the rail (144mm for 41.1009) and approx. 105mm off the wall. Price includes radiator and wall fixing sets, valves extra.

Technical Tables & Drawings
Page 424-425

Traditional Range

STOUR

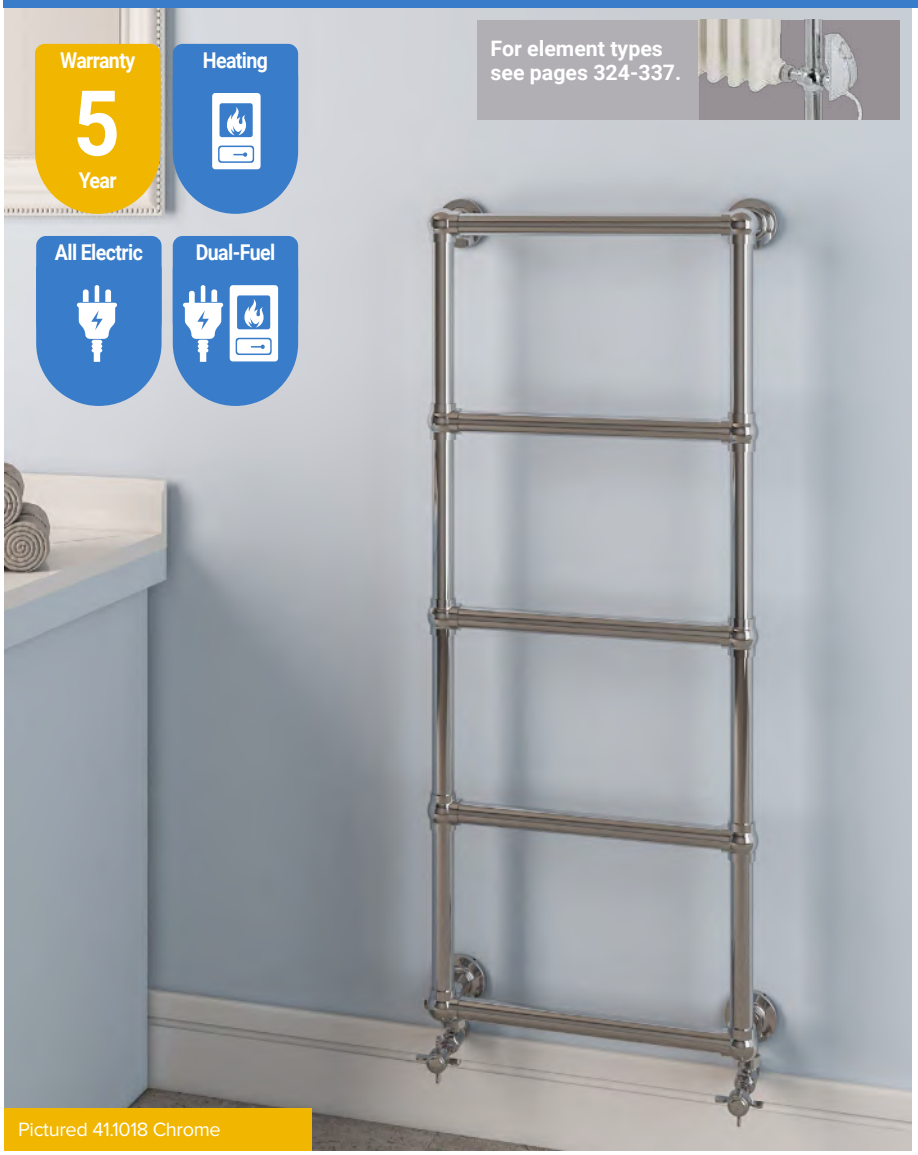

Pictured 41.1018 Chrome

Our traditional range of radiators offer character and flair to ensure they fit in with your classic designs. The Stour in chrome finish offers a Victorian feel to complement a traditional bathroom.

FEATURES
- Can be single, dual fuel or all electric
- Tested to BS EN 442 standards
- 5 Year Manufacturer's Warranty*

* With conditions

Technical Tables & Drawings
Page 424-425

Stour - Chrome

Size H x W	Delta △T30 Watts	Delta △T30 BTU	Delta △T50 Watts	Delta △T50 BTU	Element Output	Code	£ Ex VAT	£ Inc VAT
690 x 500mm	69	236	129	440	150W	41.1010	242.00	**290.40**
690 x 600mm	79	270	149	509	100W	41.1005	265.00	**318.00**
1195 x 500mm	106	362	201	686	150W	41.1018	382.00	**458.40**
1195 x 600mm	118	403	223	761	150W	41.1019	401.00	**481.20**
1550 x 500mm	131	447	247	843	150W	41.1020	450.00	**540.00**
1550 x 600mm	146	498	276	942	150W	41.1021	479.00	**574.80**

All Stour models shown above are compatible with Element Type A, A+ and E (except 690x500mm size Type E)

TECHNICAL INFORMATION

All measurements in Height by Width. Radiators that are electric only are restricted to the heat output of the elements. Element size can be increased to full capacity of rail if using element type E. For element types see pages 324-337. For matching valves see pages 338-353. For indirect heating systems only. Tappings are approx. 74mm less than the width of the rail and approx. 53mm off the wall. Price includes radiator and wall fixing sets, valves extra.

Pictured 41.1020 Chrome

Pictured 41.1018 Chrome

Pictured 41.1010 Chrome

Traditional Range

STOUR

Our traditional range of radiators offer character and flair to ensure they fit in with your classic designs. The Stour in featured colours, brushed brass and matt white offers a Victorian feel to complement a traditional bathroom.

Stour - Brushed Brass

Size H x W	Delta △T30 Watts	Delta △T30 BTU	Delta △T50 Watts	Delta △T50 BTU	Element Output	Code	£ Ex VAT	£ Inc VAT
690 x 500mm	97	331	183	625	150W	41.0377	373.00	**447.60**
690 x 600mm	105	359	197	672	100W	41.0378	403.00	**483.60**
1195 x 500mm	153	522	288	983	150W	41.0379	594.00	**712.80**
1195 x 600mm	170	580	319	1088	150W	41.0380	626.00	**751.20**
1550 x 500mm	184	628	347	1184	150W	41.0381	731.00	**877.20**
1550 x 600mm	213	727	401	1368	150W	41.0382	782.00	**938.40**

Stour - Matt White

Size H x W	Delta △T30 Watts	Delta △T30 BTU	Delta △T50 Watts	Delta △T50 BTU	Element Output	Code	£ Ex VAT	£ Inc VAT
690 x 500mm	104	355	192	655	150W	41.0431	207.00	**248.40**
690 x 600mm	116	396	216	737	100W	41.0432	222.00	**266.40**
1195 x 500mm	166	567	310	1058	150W	41.0433	332.00	**398.40**
1195 x 600mm	183	625	343	1170	150W	41.0434	354.00	**424.80**
1550 x 500mm	210	717	391	1334	150W	41.0435	364.00	**436.80**
1550 x 600mm	229	781	430	1467	150W	41.0436	395.00	**474.00**

FEATURES

- Can be single, dual fuel or all electric
- Tested to BS EN 442 standards•
- Comes with same colour bleed valve (brushed brass colour only)
- 5 Year Manufacturer's Warranty*

* With conditions

Technical Tables & Drawings
Page 424-425

TECHNICAL INFORMATION

All measurements in Height by Width. Radiators that are electric only are restricted to the heat output of the elements. Element size can be increased to full capacity of rail if using element type E. For element types see pages 324-337. For matching valves see pages 338-353. For indirect heating systems only. Tappings are approx. 74mm less than the width of the rail and approx. 53mm off the wall. Price includes radiator and wall fixing sets, valves extra.

All Stour models shown above are compatible with Element Type A, A+ and E (except 690x500mm size Type E)

Traditional Range

STOUR

Pictured 41.0437 Matt Anthracite

Pictured 41.0445 Matt Black

Our traditional range of radiators offer character and flair to ensure they fit in with your classic designs. The Stour in featured colours, matt anthracite and matt black offers a Victorian feel to complement a traditional bathroom.

Stour - Matt Anthracite

Size H x W	Delta △T30		Delta △T50		Element Output	Code	£ Ex VAT	£ Inc VAT
	Watts	BTU	Watts	BTU				
690 x 500mm	104	355	192	655	150W	41.0437	207.00	**248.40**
690 x 600mm	116	396	216	737	100W	41.0438	222.00	**266.40**
1195 x 500mm	166	567	310	1058	150W	41.0439	332.00	**398.40**
1195 x 600mm	183	625	343	1170	150W	41.0440	354.00	**424.80**
1550 x 500mm	210	717	391	1334	150W	41.0441	364.00	**436.80**
1550 x 600mm	229	781	430	1467	150W	41.0442	395.00	**474.00**

Stour - Matt Black

Size H x W	Delta △T30		Delta △T50		Element Output	Code	£ Ex VAT	£ Inc VAT
	Watts	BTU	Watts	BTU				
690 x 500mm	104	355	192	655	150W	41.0443	207.00	**248.40**
690 x 600mm	116	396	216	737	100W	41.0444	222.00	**266.40**
1195 x 500mm	166	567	310	1058	150W	41.0445	332.00	**398.40**
1195 x 600mm	183	625	343	1170	150W	41.0446	354.00	**424.80**
1550 x 500mm	210	717	391	1334	150W	41.0447	364.00	**436.80**
1550 x 600mm	229	781	430	1467	150W	41.0448	395.00	**474.00**

FEATURES

- Can be single, dual fuel or all electric
- Tested to BS EN 442 standards
- 5 Year Manufacturer's Warranty*

* With conditions

Technical Tables & Drawings
Page 424-425

TECHNICAL INFORMATION

All measurements in Height by Width. Radiators that are electric only are restricted to the heat output of the elements. Element size can be increased to full capacity of rail if using element type E. For element types see pages 324-337. For matching valves see pages 338-353. For indirect heating systems only. Tappings are approx. 74mm less than the width of the rail and approx. 53mm off the wall. Price includes radiator and wall fixing sets, valves extra.

All Stour models shown above are compatible with Element Type A, A+ and E (except 690x500mm size Type E)

Traditional Range

THAMES

Our traditional range of radiators offer character and flair to ensure they fit in with your classic designs. These rails only be used on closed or indirect heating circuits, not on fresh water hot systems as they are of steel construction.

Thames - Chrome / Gloss White1444mm Height

Width	Delta △T30 Watts	Delta △T30 BTU	Delta △T50 Watts	Delta △T50 BTU	Element Output	Element Type	Code	£ Ex VAT	£ Inc VAT
630mm	345	1177	654	2231	450W	A, A+, C, H	41.1004	725.00	**870.00**

Tappings are approx. 130mm less than the width of the rail and approx. 150mm off the wall.

FEATURES
- Tested to BS EN 442 standards
- 5 Year Manufacturer's Warranty*
- Can be single or dual fuel, or all electric

* With conditions

Technical Tables & Drawings
Page 424-425

Pair of Radiator Valves & Tails

Code	£ Ex VAT	£ Inc VAT
54.0001	54.00	**64.80**

Radiator valves sold separately

Angled TRV with Lockshield (pair)

Code	£ Ex VAT	£ Inc VAT
54.0008	90.00	**108.00**

Radiator valves sold separately

Warranty 5 Year | Heating | All Electric | Dual-Fuel

TECHNICAL INFORMATION

All measurements in Height by Width. Radiators that are electric only are restricted to the heat output of the elements. Element size can be increased to full capacity of rail if using element type C or H. For element types see pages 324-337. For matching valves see pages 338-353. For indirect heating systems. Prices include radiator and wall fixings sets, valves extra.

Traditional Range

LEADON

Our traditional range of radiators offer character and flair to ensure they fit in with your classic designs. These rails should only be used on closed or indirect heating circuits, not on fresh water hot systems as they are of steel construction.

Leadon - Chrome / Gloss White 940mm Height

Width	Delta △T30 Watts	Delta △T30 BTU	Delta △T50 Watts	Delta △T50 BTU	Element Output	Element Type	Code	£ Ex VAT	£ Inc VAT
700mm	322	1099	602	2053	450W	A, A+, C, H	41.1007	649.00	**778.80**

Tappings are approx. 130mm less than the width of the rail and approx. 137mm off the wall.

FEATURES
- Tested to BS EN 442 standards
- 5 Year Manufacturer's Warranty*
- Can be single or dual fuel, or all electric

* With conditions

Technical Tables & Drawings
Page 424-425

Pair of Radiator Valves & Tails

Code	£ Ex VAT	£ Inc VAT
54.0001	54.00	**64.80**

Radiator valves sold separately

Angled TRV with Lockshield (pair)

Code	£ Ex VAT	£ Inc VAT
54.0008	90.00	**108.00**

Radiator valves sold separately

Warranty 5 Year | Heating | All Electric | Dual-Fuel

TECHNICAL INFORMATION

All measurements in Height by Width. Radiators that are electric only are restricted to the heat output of the elements. Element size can be increased to full capacity of rail if using element type C or H. For element types see pages 324-337. For matching valves see pages 338-353. For indirect heating systems. Prices include radiator and wall fixings sets, valves extra.

Traditional Range

COLN

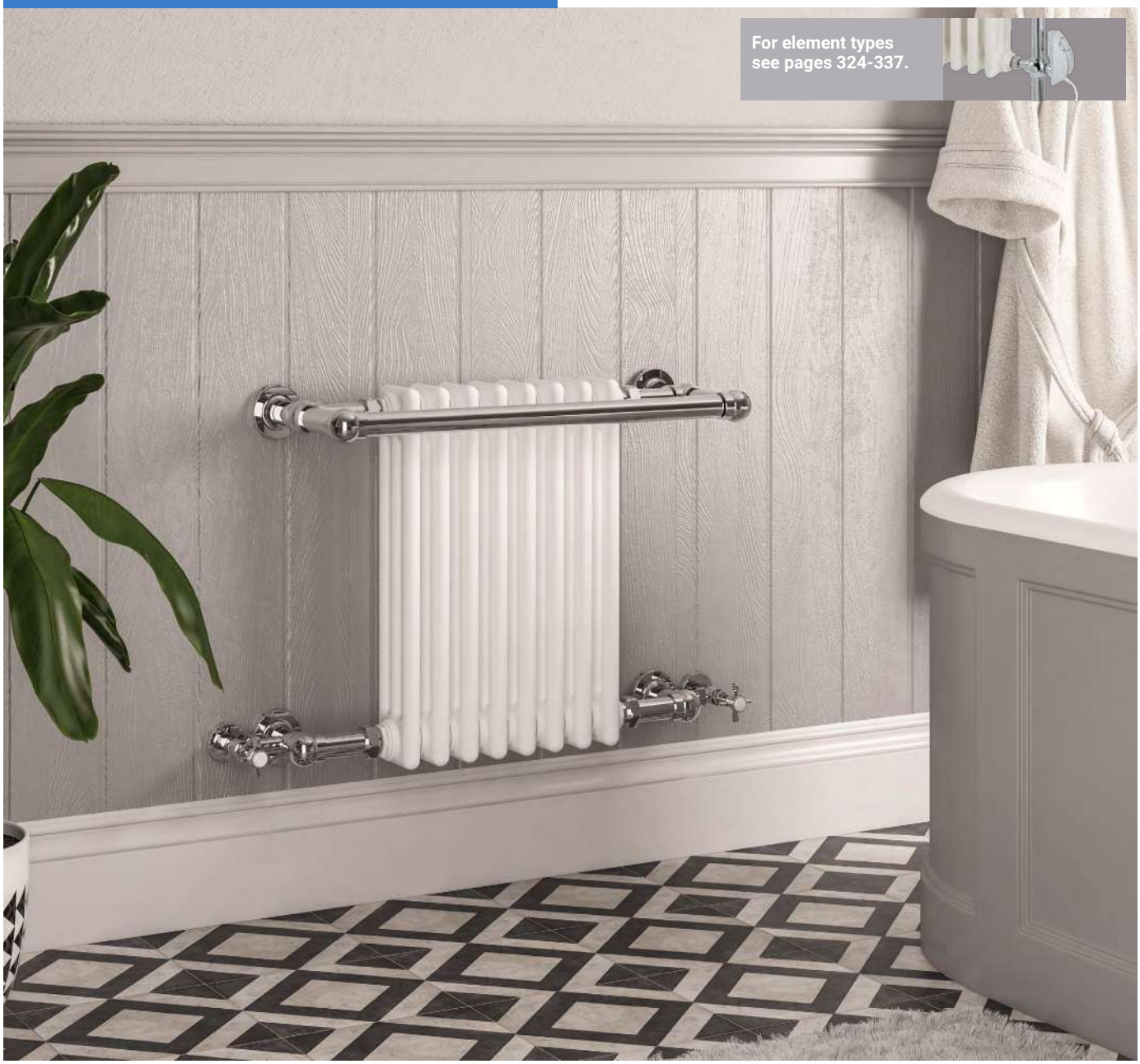

For element types see pages 324-337.

Our traditional range of radiators offer character and flair to ensure they fit in with your classic designs. These rails should only be used on closed or indirect heating circuits, not on fresh water hot systems as they are of steel construction.

Coln - Chrome / Gloss White 510mm Height

Width	Delta △T30 Watts	Delta △T30 BTU	Delta △T50 Watts	Delta △T50 BTU	Element Output	Element Type	Code	£ Ex VAT	£ Inc VAT
680mm	247	843	468	1596	300W	A, A+, C, H	41.1002	491.00	**589.20**

On dual fuel installation, please use only Type A element.
Tappings approx. 4mm less than the width of the rail and approx. 50mm off the wall.

FEATURES
- Tested to BS EN 442 standards
- 5 Year Manufacturer's Warranty*
- Can be single or dual fuel, or all electric

* With conditions

Technical Tables & Drawings
Page 426-427

Warranty 5 Year | Heating | All Electric | Dual-Fuel

Pair of Radiator Valves & Tails

Code	£ Ex VAT	£ Inc VAT
54.0001	54.00	**64.80**

Radiator valves sold separately

Angled Radiator Valves (pair)

Code	£ Ex VAT	£ Inc VAT
54.0043	34.00	**40.80**

TECHNICAL INFORMATION

All measurements in Height by Width. Radiators that are electric only are restricted to the heat output of the elements. Element size can be increased to full capacity of rail if using element type C or H. For element types see pages 324-337. For matching valves see pages 338-353. For indirect heating systems. Prices include radiator and wall fixings sets, valves extra.

Traditional Range

TWYVER

Our traditional range of radiators offer character and flair to ensure they fit in with your classic designs. These rails should only be used on closed or indirect heating circuits, not on fresh water hot systems as they are of steel construction.

Twyver - Chrome / Gloss White

Size H x W	Delta △T30		Delta △T50		Code	£ Ex VAT	£ Inc VAT
	Watts	BTU	Watts	BTU			
952 x 684mm	334	1139	644	2197	41.1011	669.00	**802.80**

Tappings are approx. 137mm less than the width of the rail and approx. 108mm off the wall.

FEATURES
- Tested to BS EN 442 standards.
- 5 Year Manufacturer's Warranty*
- Not suitable for elements

* With conditions

Technical Tables & Drawings
Page 426-427

Warranty 5 Year

Heating

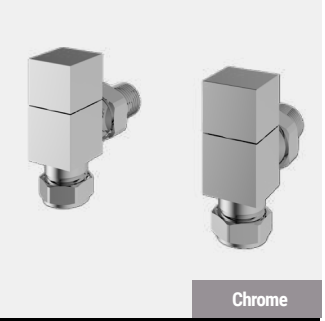

Chrome

Square Angled Radiator Valves (pair)

Code	£ Ex VAT	£ Inc VAT
54.0057	66.00	**79.20**

Chrome

Angled Radiator Valves (pair)

Code	£ Ex VAT	£ Inc VAT
54.0043	34.00	**40.80**

TECHNICAL INFORMATION

All measurements in Height by Width. Not suitable for elements. For matching valves see pages 338-353. For indirect heating systems. Prices include radiator and wall fixings sets, valves extra.

Traditional Range

AVON

For element types see pages 324-337.

Pictured 41.1006 Chrome / Gloss White

Avon - Chrome / Gloss White

Size H x W	Delta △T30		Delta △T50		Element Output	Code	£ Ex VAT	£ Inc VAT
	Watts	BTU	Watts	BTU				
960 x 429mm	159	543	302	1030	150W	41.1027	385.00	**462.00**
960 x 500mm	205	700	384	1310	300W	41.1006	408.00	**489.60**

Our traditional range of radiators offer character and flair to ensure they fit in with your classic designs. These rails only be used on closed or indirect heating circuits, not on fresh water hot systems as they are of steel construction.

Warranty 5 Year | Heating | All Electric | Dual-Fuel

FEATURES

- Tested to BS EN 442 standards
- 5 Year Manufacturer's Warranty*
- Can be single or dual fuel, or all electric

* With conditions

Technical Tables & Drawings
Page 426-427

TECHNICAL INFORMATION

All measurements in Height by Width. Radiators that are electric only are restricted to the heat output of the elements. Element size can be increased to full capacity of rail if using element type C, E or H. For element types see pages 324-337. For matching valves see pages 338-353. For indirect heating systems. Tappings from wall 135mm. (for 429mm width is 110mm.) Projection from wall 185mm. (for 429mm width is 160mm.) Prices include radiator and wall fixings sets, valves extra.

All Avon models shown on pages 286 and 287 are compatible with Element Type A, A+, C and H

Traditional Range

AVON

For element types see pages 324-337.

Pictured 41.0805 Brushed Brass / Gloss White

Avon - Brushed Brass / Gloss White

Size H x W	Delta △T30		Delta △T50		Element Output	Code	£ Ex VAT	£ Inc VAT
	Watts	BTU	Watts	BTU				
960 x 429mm	182	621	342	1167	150W	41.0804	551.00	**661.20**
960 x 500mm	227	775	428	1460	300W	41.0805	583.00	**699.60**

Pictured 41.1028 Chrome / Matt Anthracite

Avon - Chrome / Matt Anthracite

Size H x W	Delta △T30		Delta △T50		Element Output	Code	£ Ex VAT	£ Inc VAT
	Watts	BTU	Watts	BTU				
960 x 429mm	159	543	302	1030	150W	41.1028	385.00	**462.00**
960 x 500mm	199	679	377	1286	300W	41.1025	408.00	**489.60**

Pictured 41.1026 Chrome / Matt Black

Avon - Chrome / Matt Black

Size H x W	Delta △T30		Delta △T50		Element Output	Code	£ Ex VAT	£ Inc VAT
	Watts	BTU	Watts	BTU				
960 x 429mm	159	543	302	1030	150W	41.1029	385.00	**462.00**
960 x 500mm	199	679	377	1286	300W	41.1026	408.00	**489.60**

Traditional Range

ISBOURNE

Pictured 41.1000 Chrome / Gloss White

Isbourne - Chrome / Gloss White

Size H x W	Delta △T30		Delta △T50		Element Output	Code	£ Ex VAT	£ Inc VAT
	Watts	BTU	Watts	BTU				
940 x 507mm	207*	706*	392*	1337*	300W	41.0806	448.00	**537.60**
940 x 600mm	274	935	521	1777	450W	41.1000	476.00	**571.20**

* Further heat output information available on eastbrooktrade.com **E&OA**

Our traditional range of radiators offer character and flair to ensure they fit in with your classic designs. These rails only be used on closed or indirect heating circuits, not on fresh water hot systems as they are of steel construction.

Warranty 5 Year | Heating | All Electric | Dual-Fuel

FEATURES

- Tested to BS EN 442 standards
- 5 Year Manufacturer's Warranty*
- Can be single or dual fuel, or all electric

* With conditions

Technical Tables & Drawings
Page 428-429

TECHNICAL INFORMATION

All measurements in Height by Width. Radiators that are electric only are restricted to the heat output of the elements. Element size can be increased to full capacity of rail if using element type C or H. For element types see pages 324-337. For matching valves see pages 338-353. For indirect heating systems. Tappings from wall approx 121mm. Projection from wall 260mm. Prices include radiator and wall fixings sets, valves extra.

All Isbourne models shown on pages 288 and 289 are compatible with Element Type A, A+, C and H

Traditional Range

ISBOURNE

Pictured 41.0709 Brushed Brass / Gloss White

Isbourne - Brushed Brass / Gloss White

Size H x W	Delta △T30		Delta △T50		Element Output	Code	£ Ex VAT	£ Inc VAT
	Watts	BTU	Watts	BTU				
940 x 507mm	207	706	392	1337	300W	41.0809	646.00	**775.20**
940 x 600mm	275	938	522	1781	450W	41.0709	687.00	**824.40**

Pictured 41.1031 Brushed Brass / Matt Black

Isbourne - Brushed Brass / Matt Black

Size H x W	Delta △T30		Delta △T50		Element Output	Code	£ Ex VAT	£ Inc VAT
	Watts	BTU	Watts	BTU				
940 x 507mm	207	706	392	1337	300W	41.1030	646.00	**775.20**
940 x 600mm	275	938	522	1781	450W	41.1031	687.00	**824.40**

Pictured 41.1024 Chrome / Matt Anthracite

Isbourne - Chrome / Matt Anthracite

Size H x W	Delta △T30		Delta △T50		Element Output	Code	£ Ex VAT	£ Inc VAT
	Watts	BTU	Watts	BTU				
940 x 507mm	207*	706*	392*	1337*	300W	41.0807	448.00	**537.60**
940 x 600mm	275	938	524	1787	450W	41.1024	476.00	**571.20**

* Further heat output information available on eastbrooktrade.com **E&OA**

Pictured 41.1023 Chrome / Matt Black

Isbourne - Chrome / Matt Black

Size H x W	Delta △T30		Delta △T50		Element Output	Code	£ Ex VAT	£ Inc VAT
	Watts	BTU	Watts	BTU				
940 x 507mm	207*	706*	392*	1337*	300W	41.0808	448.00	**537.60**
940 x 600mm	275	938	524	1787	450W	41.1023	476.00	**571.20**

* Further heat output information available on eastbrooktrade.com **E&OA**

Traditional Range

IMPERIA 2 COLUMN - GLOSS WHITE

Pictured 41.0893 Gloss White with 41.0357 feet

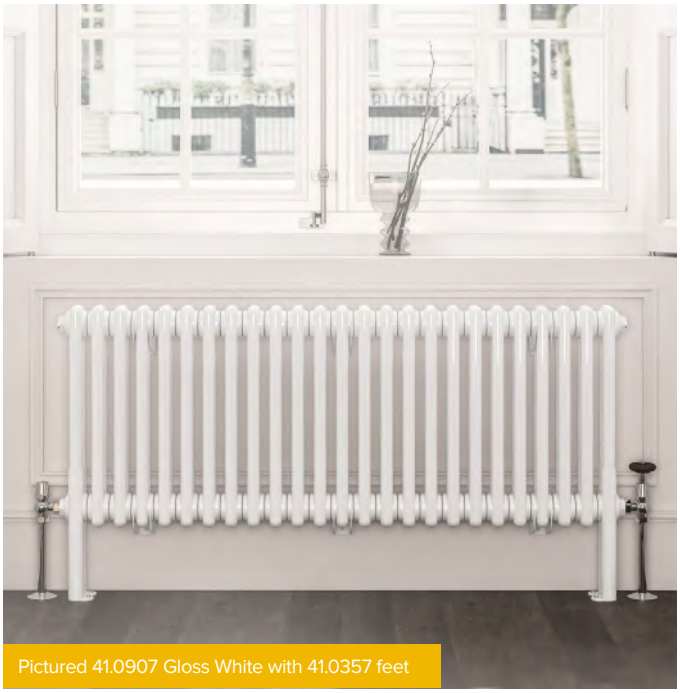

Pictured 41.0907 Gloss White with 41.0357 feet

Pictured 41.0926 Gloss White

A traditional rail which will give a Victorian touch of authenticity to any room but will also create an elegant look to a contemporary interior. This radiator boasts high outputs to ensure the whole room is warm. Comes with the option of traditional legs and in gloss white, matt anthracite, matt black or bare metal finishes. Also available in three, four and six columns.

FEATURES

- Tested to BS EN 442 standards
- 5 Year Manufacturer's Warranty*
- Matching colour wall fixing sets
- Radiator feet option available to get the classic look
- Material thickness 1.5mm
- Doesn't require flow diverter

* With conditions

Technical Tables & Drawings
Page 428-429

Warranty 5 Year

Heating

All Electric

Dual-Fuel

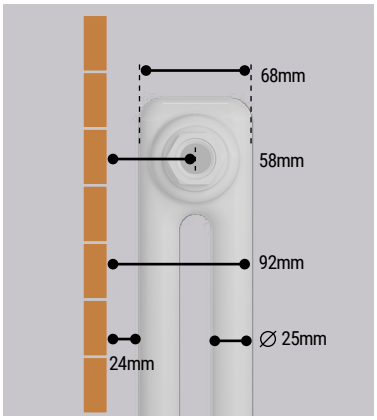

Traditional Range

IMPERIA 2 COLUMN - GLOSS WHITE

300mm Height - Horizontal

Imperia Two Column Radiators - Gloss White

Width	Delta △T30 Watts	Delta △T30 BTU	Delta △T50 Watts	Delta △T50 BTU	Element Output	Element Type	Code	£ Ex VAT	£ Inc VAT
830mm	234	798	432	1474	300W	A, A+, C, H	41.0892	216.00	**259.20**
1010mm	286	976	528	1801	450W	A, A+, C, H	41.0893	258.00	**309.60**
1145mm	325	1109	600	2046	450W	A, A+, C, E*, H	41.0383	288.00	**345.60**
1370mm	390	1330	720	2456	450W	A, A+, C, E*, H	41.0384	340.00	**408.00**
1460mm	416	1419	768	2619	600W	A, A+, C, E*, H	41.0894	361.00	**433.20**
1640mm	468	1596	864	2947	750W	A, A+, C, E*, H	41.0895	402.00	**482.40**

*600w Type E Element can be fitted

450mm Height - Horizontal

Imperia Two Column Radiators - Gloss White

Width	Delta △T30 Watts	Delta △T30 BTU	Delta △T50 Watts	Delta △T50 BTU	Element Output	Element Type	Code	£ Ex VAT	£ Inc VAT
605mm	247	843	468	1596	300W	A, A+, C, H	41.0904	188.00	**225.60**
830mm	342	1167	648	2210	450W	A, A+, C, E*, H	41.0905	249.00	**298.80**
1010mm	418	1426	792	2701	600W	A, A+, C, E*, H	41.0906	297.00	**356.40**
1145mm	475	1620	900	3069	750W	A, A+, C, E*, H	41.0907	332.00	**398.40**
1460mm	608	2074	1152	3929	900W	A, A+, C, E*, H	41.0908	416.00	**499.20**

*600w Type E Element can be fitted

TECHNICAL INFORMATION

All measurements in Height by Width. Radiators that are electric only are restricted to the heat output of the elements. Element size can be increased to full capacity of rail if using element type C, E or H. For element types see pages 324-337. For matching valves see pages 338-353. For indirect heating systems. Tappings are the width of the rail and 58mm off the wall. Projection from wall 92mm. Prices include radiator and wall fixings sets, valves extra.

600mm Height - Horizontal

Imperia Two Column Radiators - Gloss White

Width	Delta △T30 Watts	Delta △T30 BTU	Delta △T50 Watts	Delta △T50 BTU	Element Output	Element Type	Code	£ Ex VAT	£ Inc VAT
425mm	225	768	423	1443	300W	A, A+, C, H	41.0385	158.00	**189.60**
470mm	250	853	470	1603	300W	A, A+, C, H	41.0386	172.00	**206.40**
515mm	275	938	517	1763	300W	A, A+, C, H	41.0387	185.00	**222.00**
560mm	300	1023	564	1924	300W	A, A+, C, H	41.0388	200.00	**240.00**
605mm	325	1109	611	2084	450W	A, A+, C, H	41.0339	236.00	**283.20**
830mm	450	1535	846	2885	600W	A, A+, C, E*, H	41.0338	310.00	**372.00**
1010mm	550	1876	1034	3526	750W	A, A+, C, H	41.0389	338.00	**405.60**
1145mm	625	2132	1175	4007	900W	A, A+, H	41.0337	415.00	**498.00**
1460mm	800	2728	1504	5129	1000W	A+	41.0390	476.00	**571.20**
1640mm	900	3069	1692	5770	1200W	A, A+, H	41.0919	527.00	**632.40**
1820mm	1000	3410	1880	6411	1200W	A, A+, H	41.0920	582.00	**698.40**

*600w Type E Element can be fitted

1800mm Height - Vertical

Imperia Two Column Radiators - Gloss White

Width	Delta △T30 Watts	Delta △T30 BTU	Delta △T50 Watts	Delta △T50 BTU	Element Output	Element Type	Code	£ Ex VAT	£ Inc VAT
290mm	414	1412	804	2742	N/A	N/A	41.0391	227.00	**272.40**
380mm	552	1883	1072	3656	N/A	N/A	41.0341	296.00	**355.20**
470mm	690	2353	1340	4570	N/A	N/A	41.0340	356.00	**427.20**
515mm	759	2589	1474	5027	N/A	N/A	41.0925	397.00	**476.40**
560mm	828	2824	1608	5484	N/A	N/A	41.0926	427.00	**512.40**
605mm	897	3059	1742	5941	N/A	N/A	41.0927	458.00	**549.60**
650mm	966	3295	1876	6398	N/A	N/A	41.0928	489.00	**586.80**

Pictured 41.0919 Gloss White with 41.0357 feet

Imperia Radiator Feet

Description	Code	£ Ex VAT	£ Inc VAT
Imperia 2 Column Radiator Feet (pair) Gloss White	41.0357	35.00	**42.00**

Round Vent Caps
Page 357

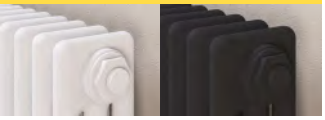

Imperia Towel Hangers
Page 355

Traditional Valves
Page 341&352

Imperia Robe Hooks
Page 355

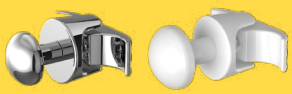

Traditional Range

IMPERIA 2 COLUMN - MATT ANTHRACITE

Pictured 41.0896 Matt Anthracite

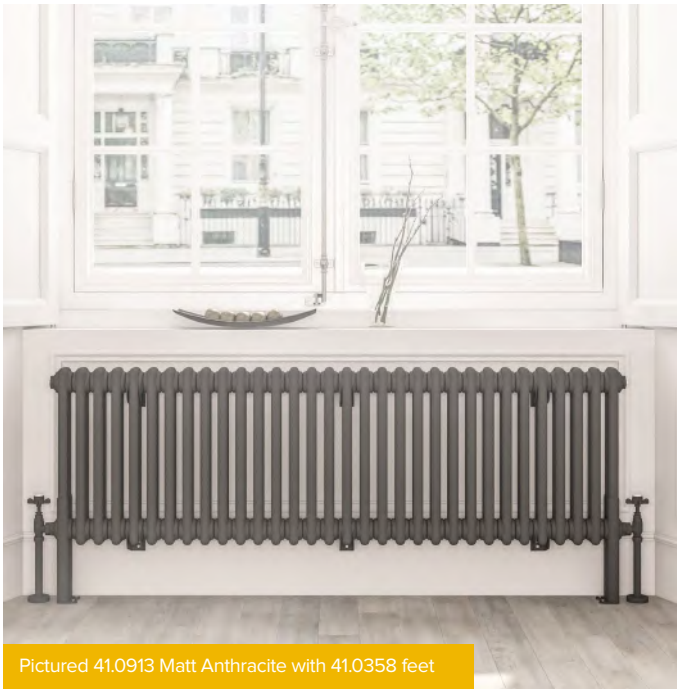

Pictured 41.0913 Matt Anthracite with 41.0358 feet

Pictured 41.0345 Matt Anthracite with 41.0358 feet

A traditional rail which will give a Victorian touch of authenticity to any room but will also create an elegant look to a contemporary interior. This radiator boasts high outputs to ensure the whole room is warm. Comes with the option of traditional legs and in gloss white, matt anthracite, matt black or bare metal finishes. Also available in three, four and six columns.

FEATURES

- Tested to BS EN 442 standards
- 5 Year Manufacturer's Warranty*
- Matching colour wall fixing sets
- Radiator feet option available to get the classic look
- Material thickness 1.5mm
- Doesn't require flow diverter

* With conditions

Technical Tables & Drawings
Page 428-429

Warranty 5 Year

Heating

All Electric

Dual-Fuel

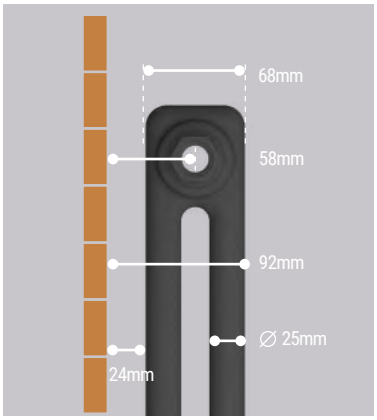

Traditional Range

IMPERIA 2 COLUMN - MATT ANTHRACITE

300mm Height - Horizontal

Imperia Two Column Radiators - Matt Anthracite

Width	Delta △T30 Watts	Delta △T30 BTU	Delta △T50 Watts	Delta △T50 BTU	Element Output	Element Type	Code	£ Ex VAT	£ Inc VAT
830mm	234	798	432	1474	300W	A, A+, C, H	41.0896	216.00	**259.20**
1010mm	286	976	528	1801	450W	A, A+, C, H	41.0897	258.00	**309.60**
1145mm	325	1109	600	2046	450W	A, A+, C, E*, H	41.0392	288.00	**345.60**
1370mm	390	1330	720	2456	450W	A, A+, C, E*, H	41.0393	340.00	**408.00**
1460mm	416	1419	768	2619	600W	A, A+, C, E*, H	41.0898	361.00	**433.20**
1640mm	468	1596	864	2947	750W	A, A+, C, E*, H	41.0899	402.00	**482.40**

*600w Type E Element can be fitted

450mm Height - Horizontal

Imperia Two Column Radiators - Matt Anthracite

Width	Delta △T30 Watts	Delta △T30 BTU	Delta △T50 Watts	Delta △T50 BTU	Element Output	Element Type	Code	£ Ex VAT	£ Inc VAT
605mm	247	843	468	1596	300W	A, A+, C, H	41.0909	188.00	**225.60**
830mm	342	1167	648	2210	450W	A, A+, C, E*, H	41.0910	249.00	**298.80**
1010mm	418	1426	792	2701	600W	A, A+, C, E*, H	41.0911	297.00	**356.40**
1145mm	475	1620	900	3069	750W	A, A+, C, E*, H	41.0912	332.00	**398.40**
1460mm	608	2074	1152	3929	900W	A, A+, C, E*, H	41.0913	416.00	**499.20**

*600w Type E Element can be fitted

TECHNICAL INFORMATION

All measurements in Height by Width. Radiators that are electric only are restricted to the heat output of the elements. Element size can be increased to full capacity of rail if using element type C, E or H. For element types see pages 324-337. For matching valves see pages 338-353. For indirect heating systems. Tappings are the width of the rail and 58mm off the wall. Projection from wall 92mm. Prices include radiator and wall fixings sets, valves extra.

600mm Height - Horizontal

Imperia Two Column Radiators - Matt Anthracite

Width	Delta △T30 Watts	Delta △T30 BTU	Delta △T50 Watts	Delta △T50 BTU	Element Output	Element Type	Code	£ Ex VAT	£ Inc VAT
425mm	225	768	423	1443	300W	A, A+, C, H	41.0394	158.00	**189.60**
470mm	250	853	470	1603	300W	A, A+, C, H	41.0395	172.00	**206.40**
515mm	275	938	517	1763	300W	A, A+, C, H	41.0396	185.00	**222.00**
560mm	300	1023	564	1924	300W	A, A+, C, H	41.0397	200.00	**240.00**
605mm	325	1109	611	2084	450W	A, A+, C, H	41.0344	236.00	**283.20**
830mm	450	1535	846	2885	600W	A, A+, C, E*, H	41.0343	310.00	**372.00**
1010mm	550	1876	1034	3526	750W	A, A+, C, H	41.0398	338.00	**405.60**
1145mm	625	2132	1175	4007	900W	A, A+, H	41.0342	415.00	**498.00**
1460mm	800	2728	1504	5129	1000W	A+	41.0399	476.00	**571.20**
1640mm	900	3069	1692	5770	1200W	A, A+, H	41.0921	527.00	**632.40**
1820mm	1000	3410	1880	6411	1200W	A, A+, H	41.0922	582.00	**698.40**

*600w Type E Element can be fitted

1800mm Height - Vertical

Imperia Two Column Radiators - Matt Anthracite

Width	Delta △T30 Watts	Delta △T30 BTU	Delta △T50 Watts	Delta △T50 BTU	Element Output	Element Type	Code	£ Ex VAT	£ Inc VAT
290mm	414	1412	804	2742	N/A	N/A	41.0400	227.00	**272.40**
380mm	552	1883	1072	3656	N/A	N/A	41.0346	296.00	**355.20**
470mm	690	2353	1340	4570	N/A	N/A	41.0345	356.00	**427.20**
515mm	759	2589	1474	5027	N/A	N/A	41.0929	397.00	**476.40**
560mm	828	2824	1608	5484	N/A	N/A	41.0930	427.00	**512.40**
605mm	897	3059	1742	5941	N/A	N/A	41.0931	458.00	**549.60**
650mm	966	3295	1876	6398	N/A	N/A	41.0932	489.00	**586.80**

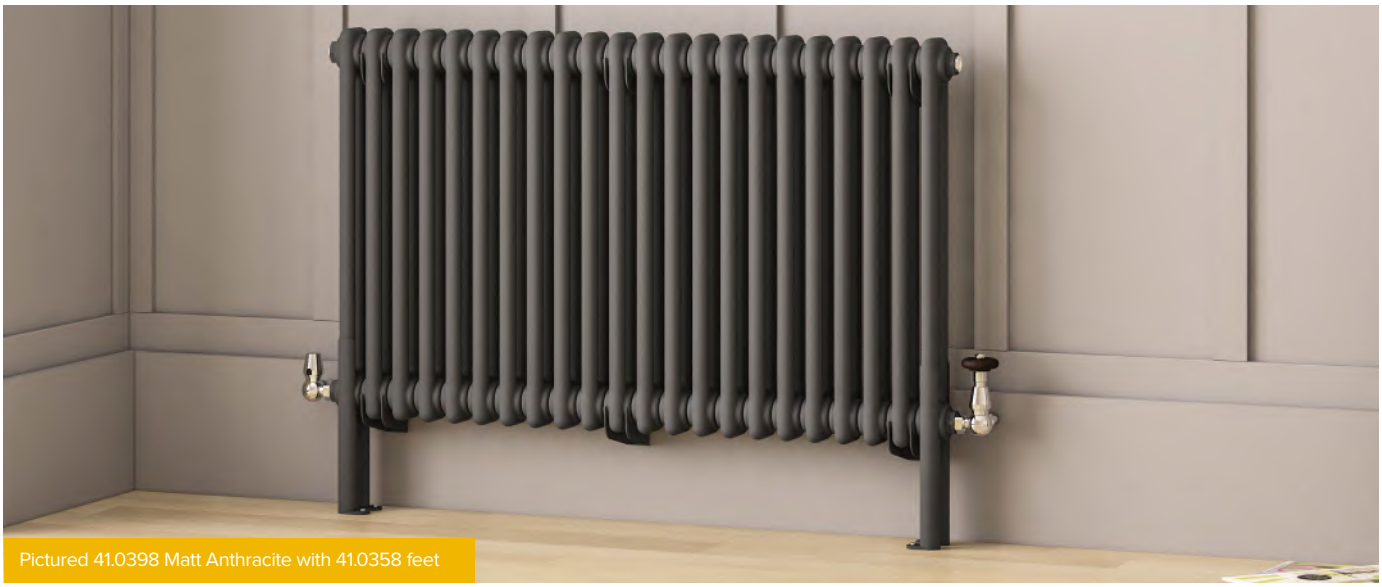

Pictured 41.0398 Matt Anthracite with 41.0358 feet

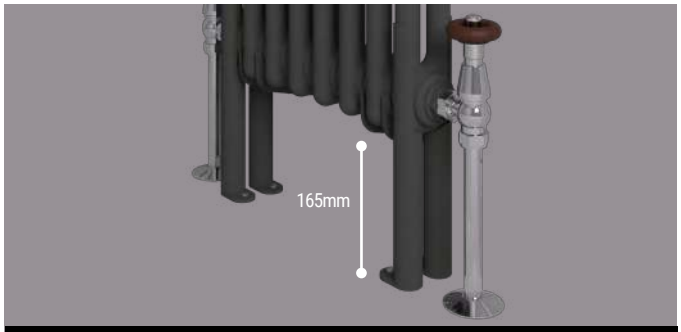

Imperia Radiator Feet

Description	Code	£ Ex VAT	£ Inc VAT
Imperia 2 Column Radiator Feet (pair) Matt Anthracite	41.0358	35.00	**42.00**

Round Vent Caps
Page 357

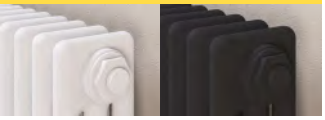

Imperia Towel Hangers
Page 355

Traditional Valves
Page 341&352

Imperia Robe Hooks
Page 355

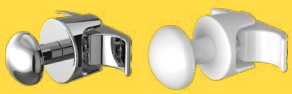

Traditional Range

IMPERIA 2 COLUMN - MATT BLACK

Pictured 41.0902 Matt Black with 41.0763 feet

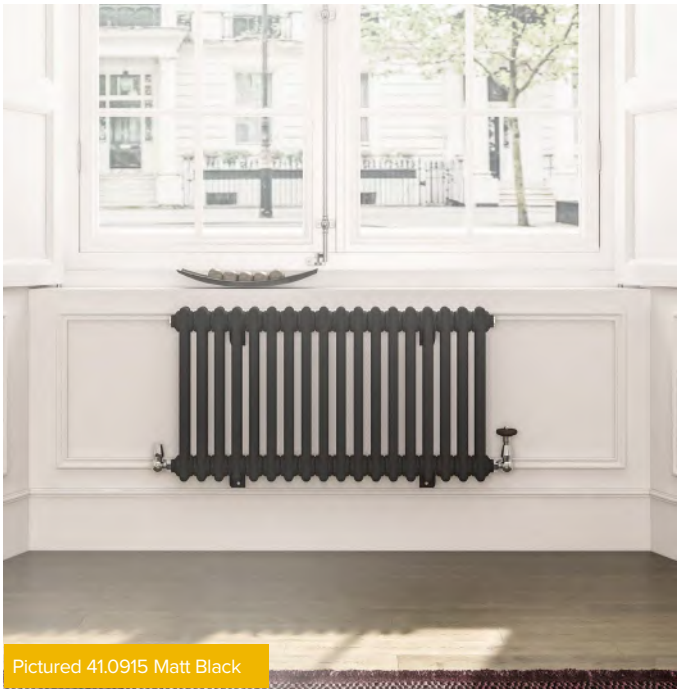

Pictured 41.0915 Matt Black

Pictured 41.0936 Matt Black with 41.0763 feet

A traditional rail which will give a Victorian touch of authenticity to any room but will also create an elegant look to a contemporary interior. This radiator boasts high outputs to ensure the whole room is warm. Comes with the option of traditional legs and in gloss white, matt anthracite, matt black or bare metal finishes. Also available in three, four and six columns.

FEATURES

- Tested to BS EN 442 standards
- 5 Year Manufacturer's Warranty*
- Matching colour wall fixing sets
- Radiator feet option available to get the classic look
- Material thickness 1.5mm
- Doesn't require flow diverter

* With conditions

Technical Tables & Drawings
Page 428-429

Warranty 5 Year

Heating

All Electric

Dual-Fuel

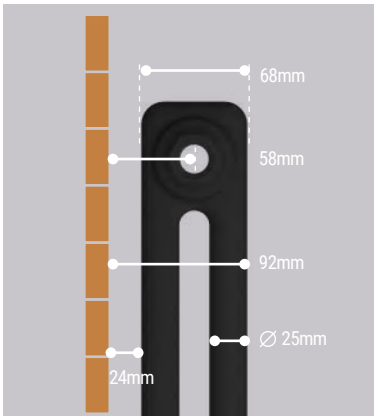

Traditional Range

IMPERIA 2 COLUMN - MATT BLACK

300mm Height - Horizontal

Imperia Two Column Radiators - Matt Black

Width	Delta △T30 Watts	Delta △T30 BTU	Delta △T50 Watts	Delta △T50 BTU	Element Output	Element Type	Code	£ Ex VAT	£ Inc VAT
830mm	234	798	432	1474	300W	A, A+, C, H	41.0900	216.00	**259.20**
1010mm	286	976	528	1801	450W	A, A+, C, H	41.0901	258.00	**309.60**
1145mm	325	1109	600	2046	450W	A, A+, C, E*, H	41.0749	288.00	**345.60**
1370mm	390	1330	720	2456	450W	A, A+, C, E*, H	41.0750	340.00	**408.00**
1460mm	416	1419	768	2619	600W	A, A+, C, E*, H	41.0902	361.00	**433.20**
1640mm	468	1596	864	2947	750W	A, A+, C, E*, H	41.0903	402.00	**482.40**

*600w Type E Element can be fitted

450mm Height - Horizontal

Imperia Two Column Radiators - Matt Black

Width	Delta △T30 Watts	Delta △T30 BTU	Delta △T50 Watts	Delta △T50 BTU	Element Output	Element Type	Code	£ Ex VAT	£ Inc VAT
605mm	247	843	468	1596	300W	A, A+, C, H	41.0914	188.00	**225.60**
830mm	342	1167	648	2210	450W	A, A+, C, E*, H	41.0915	249.00	**298.80**
1010mm	418	1426	792	2701	600W	A, A+, C, E*, H	41.0916	297.00	**356.40**
1145mm	475	1620	900	3069	750W	A, A+, C, E*, H	41.0917	332.00	**398.40**
1460mm	608	2074	1152	3929	900W	A, A+, C, E*, H	41.0918	416.00	**499.20**

*600w Type E Element can be fitted

TECHNICAL INFORMATION

All measurements in Height by Width. Radiators that are electric only are restricted to the heat output of the elements. Element size can be increased to full capacity of rail if using element type C, E or H. For element types see pages 324-337. For matching valves see pages 338-353. For indirect heating systems. Tappings are the width of the rail and 58mm off the wall. Projection from wall 92mm. Prices include radiator and wall fixings sets, valves extra.

600mm Height - Horizontal

Imperia Two Column Radiators - Matt Black

Width	Delta △T30 Watts	Delta △T30 BTU	Delta △T50 Watts	Delta △T50 BTU	Element Output	Element Type	Code	£ Ex VAT	£ Inc VAT
425mm	225	768	423	1443	300W	A, A+, C, H	41.0751	158.00	**189.60**
470mm	250	853	470	1603	300W	A, A+, C, H	41.0752	172.00	**206.40**
515mm	275	938	517	1763	300W	A, A+, C, H	41.0753	185.00	**222.00**
560mm	300	1023	564	1924	300W	A, A+, C, H	41.0754	200.00	**240.00**
605mm	325	1109	611	2084	450W	A, A+, C, H	41.0755	236.00	**283.20**
830mm	450	1535	846	2885	600W	A, A+, C, E*, H	41.0756	310.00	**372.00**
1010mm	550	1876	1034	3526	750W	A, A+, C, H	41.0757	338.00	**405.60**
1145mm	625	2132	1175	4007	900W	A, A+, H	41.0758	415.00	**498.00**
1460mm	800	2728	1504	5129	1000W	A+	41.0759	476.00	**571.20**
1640mm	900	3069	1692	5770	1200W	A, A+, H	41.0923	527.00	**632.40**
1820mm	1000	3410	1880	6411	1200W	A, A+, H	41.0924	582.00	**698.40**

*600w Type E Element can be fitted

1800mm Height - Vertical

Imperia Two Column Radiators - Matt Black

Width	Delta △T30 Watts	Delta △T30 BTU	Delta △T50 Watts	Delta △T50 BTU	Element Output	Element Type	Code	£ Ex VAT	£ Inc VAT
290mm	414	1412	804	2742	N/A	N/A	41.0760	227.00	**272.40**
380mm	552	1883	1072	3656	N/A	N/A	41.0761	296.00	**355.20**
470mm	690	2353	1340	4570	N/A	N/A	41.0762	356.00	**427.20**
515mm	759	2589	1474	5027	N/A	N/A	41.0933	397.00	**476.40**
560mm	828	2824	1608	5484	N/A	N/A	41.0934	427.00	**512.40**
605mm	897	3059	1742	5941	N/A	N/A	41.0935	458.00	**549.60**
650mm	966	3295	1876	6398	N/A	N/A	41.0936	489.00	**586.80**

Pictured 41.0756 Matt Black

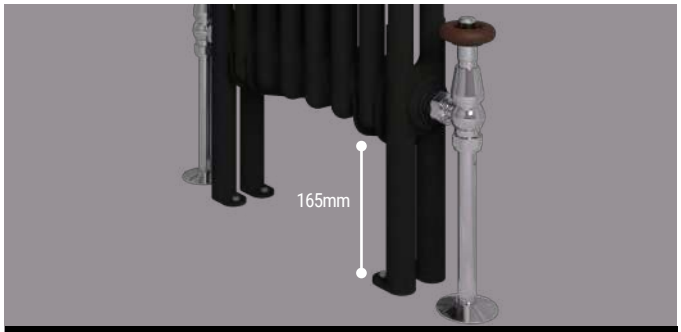

Imperia Radiator Feet

Description	Code	£ Ex VAT	£ Inc VAT
Imperia 2 Column Radiator Feet (pair) Matt Black	41.0763	35.00	**42.00**

Round Vent Caps
Page 357

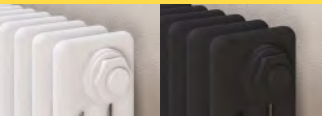

Imperia Towel Hangers
Page 355

Traditional Valves
Page 341&352

Imperia Robe Hooks
Page 355

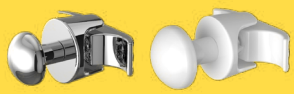

Traditional Range

IMPERIA 2 COLUMN, BARE METAL

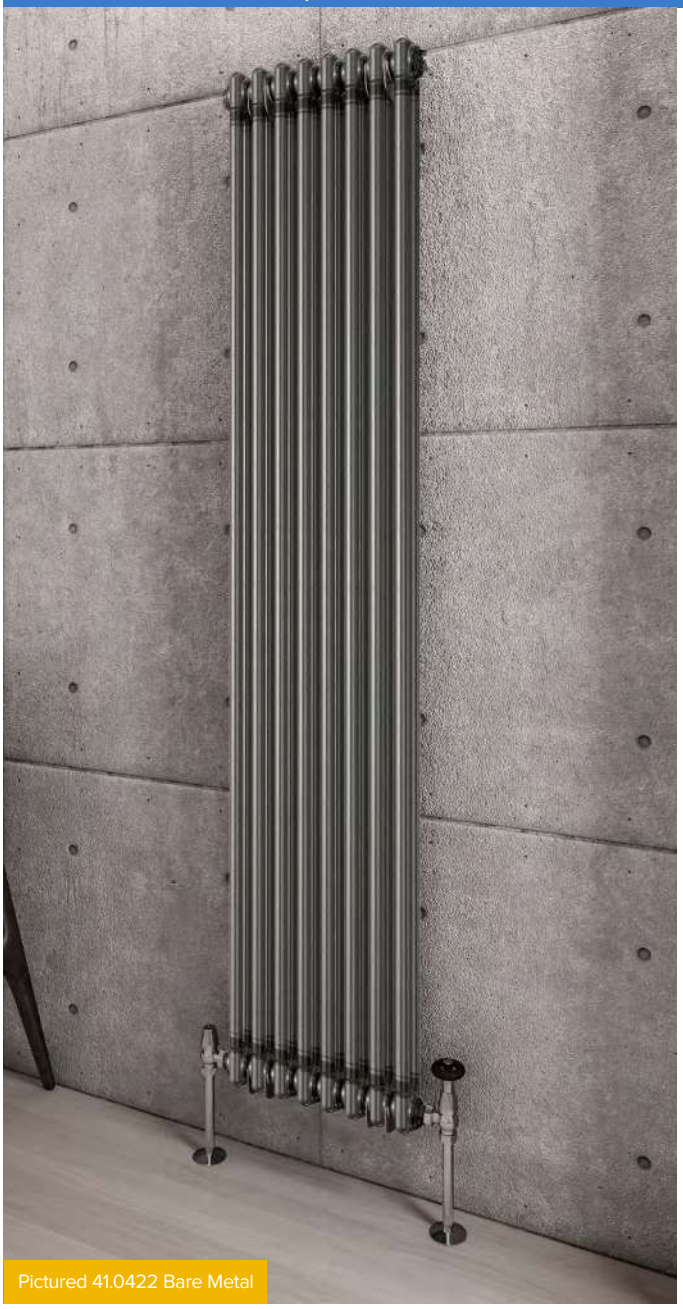

Pictured 41.0422 Bare Metal

Imperia bare metal radiators are hand finished therefore each radiator will have its own unique welding marks and imperfections that are left on purpose. Bare Metal colour shown in images are subject to the limitations of the printing process and may appear different.

Traditional Valves
Page 341&352

Pictured 41.0420 Bare Metal

FEATURES
- Tested to BS EN 442 standards
- 5 Year Manufacturer's Warranty*
- Matching colour wall fixing sets
- Radiator feet option available to get the classic look
- Material thickness 1.5mm
- Doesn't require flow diverter

* With conditions

Technical Tables & Drawings
Page 428-429

Imperia Two Column Radiators - Bare Metal 600mm Height

Width	Delta △T30 Watts*	Delta △T30 BTU*	Delta △T50 Watts*	Delta △T50 BTU*	Element Output	Element Type	Code	£ Ex VAT	£ Inc VAT
605mm	325	1109	611	2084	450W	A, A+, C, H	41.0419	334.00	**400.80**
830mm	450	1535	846	2885	600W	A, A+, C, E*, H	41.0420	444.00	**532.80**
1010mm	550	1876	1034	3526	750W	A, A+, C, H	41.0937	499.00	**598.80**
1145mm	625	2132	1175	4007	900W	A, A+, H	41.0421	595.00	**714.00**
1460mm	800	2728	1504	5129	1000W	A+	41.0938	703.00	**843.60**

Imperia Two Column Radiators - Bare Metal 1800mm Height

Width	Delta △T30 Watts*	Delta △T30 BTU*	Delta △T50 Watts*	Delta △T50 BTU*	Element Output	Element Type	Code	£ Ex VAT	£ Inc VAT
380mm	552	1883	1072	3656	N/A	N/A	41.0422	446.00	**535.20**
470mm	690	2353	1340	4570	N/A	N/A	41.0423	532.00	**638.40**
560mm	828	2824	1608	5484	N/A	N/A	41.0939	604.00	**724.80**

* Further heat output information available on eastbrooktrade.com **E&OA**

*600w Type E Element can be fitted

Eastbrook is always on the look out for products and finishes trending in the UK market. We have noticed a trend in bare brick and plain painted walls with traditional engineering items such as small sand casts mounted on the wall. Known in designer circles as the Industrial Chic look.

For those of you looking for Bare metal finish radiator showing the welds, pressings, sanding and tubes that make up a traditional column radiator, we have introduced this range. We have sealed the metal with clear lacquer to ensure no impurities are allowed to discolour or oxidise the metal.

TECHNICAL INFORMATION

All measurements in Height by Width. Radiators that are electric only are restricted to the heat output of the elements. Element size can be increased to full capacity of rail if using element type C, E or H. For element types see pages 324-337. For matching valves see pages 338-353. For indirect heating systems. Tappings are the width of the rail and 60mm off the wall. Projection from wall 94mm. Prices include radiator and wall fixings sets, valves extra.

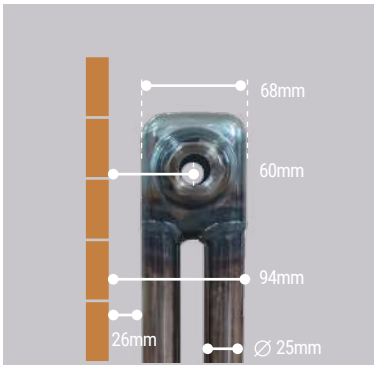

Warranty 5 Year

Heating

All Electric

Dual-Fuel

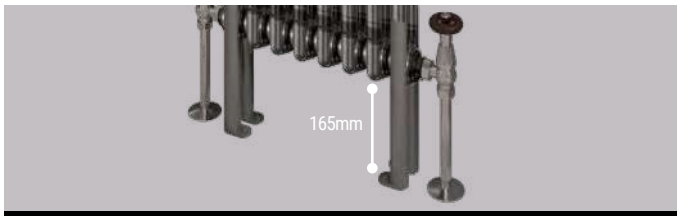

Imperia Radiator Feet

Description	Code	£ Ex VAT	£ Inc VAT
Imperia 2 Column Radiator Feet (pair)	41.0429	45.00	**54.00**

Traditional Range

IMPERIA 3 COLUMN, BARE METAL

Pictured 41.0428 Bare Metal

Imperia bare metal radiators are hand finished therefore each radiator will have its own unique welding marks and imperfections that are left on purpose. Bare Metal colour shown in images are subject to the limitations of the printing process and may appear different.

Traditional Valves
Page 341&352

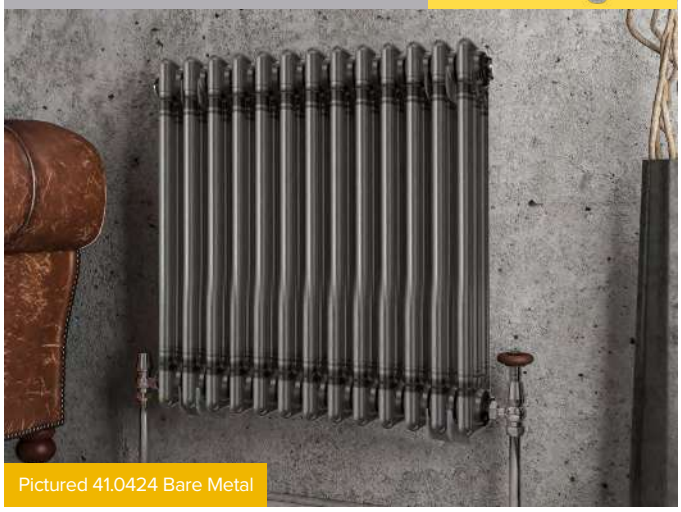

Pictured 41.0424 Bare Metal

FEATURES

- Tested to BS EN 442 standards
- 5 Year Manufacturer's Warranty*
- Matching colour wall fixing sets
- Radiator feet option available to get the classic look
- Material thickness 1.5mmv
- Doesn't require flow diverter

* With conditions

Technical Tables & Drawings
Page 430-431

Imperia Three Column Radiators - Bare Metal 600mm Height

Width	Delta △T30 Watts*	Delta △T30 BTU*	Delta △T50 Watts*	Delta △T50 BTU*	Element Output	Element Type	Code	£ Ex VAT	£ Inc VAT
605mm	390	1330	754	2572	600W	A, A+, C, H	41.0424	393.00	**471.60**
830mm	540	1842	1044	3561	900W	A+, C, H	41.0425	522.00	**626.40**
1010mm	660	2251	1276	4352	1000W	A, A+, C, H	41.0985	594.00	**712.80**
1145mm	750	2558	1450	4945	1200W	A, A+, H	41.0426	702.00	**842.40**
1460mm	960	3274	1856	6329	1200W	A+, H	41.0986	838.00	**1005.60**

Imperia Three Column Radiators - Bare Metal 1800mm Height

Width	Delta △T30 Watts*	Delta △T30 BTU*	Delta △T50 Watts*	Delta △T50 BTU*	Element Output	Element Type	Code	£ Ex VAT	£ Inc VAT
380mm	667	2275	1326	4522	N/A	N/A	41.0427	537.00	**644.40**
470mm	834	2844	1657	5651	N/A	N/A	41.0428	641.00	**769.20**
560mm	1001	3414	1988	6780	N/A	N/A	41.0987	736.00	**883.20**

* Further heat output information available on eastbrooktrade.com **E&OA**

Eastbrook is always on the look out for products and finishes trending in the UK market. We have noticed a trend in bare brick and plain painted walls with traditional engineering items such as small sand casts mounted on the wall. Known in designer circles as the Industrial Chic look.

For those of you looking for Bare metal finish radiator showing the welds, pressings, sanding and tubes that make up a traditional column radiator, we have introduced this range. We have sealed the metal with clear lacquer to ensure no impurities are allowed to discolour or oxidise the metal.

TECHNICAL INFORMATION

AAll measurements in Height by Width. Radiators that are electric only are restricted to the heat output of the elements. Element size can be increased to full capacity of rail if using element type C, E or H. For element types see pages 324-337. For matching valves see pages 338-353. For indirect heating systems. Tappings are the width of the rail and 81mm off the wall. Projection from wall 131mm. Prices include radiator and wall fixings sets, valves extra.

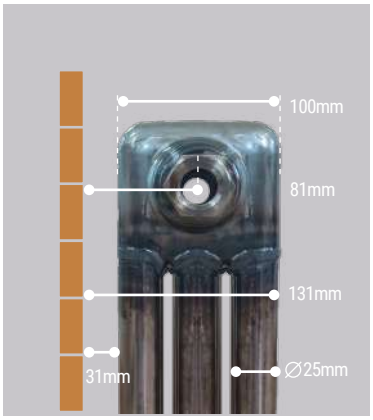

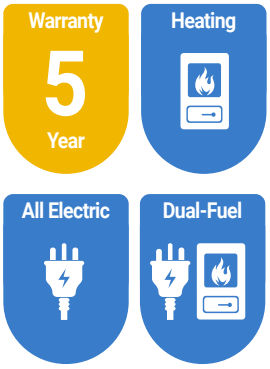

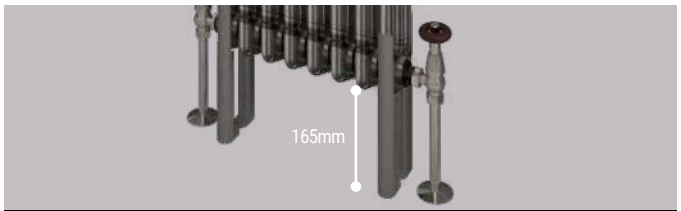

Imperia Radiator Feet

Description	Code	£ Ex VAT	£ Inc VAT
Imperia 3 Column Radiator Feet (pair)	41.0430	49.00	**58.80**

Traditional Range

IMPERIA 3 COLUMN - GLOSS WHITE

Pictured 41.0401 Gloss White

Pictured 41.0954 Gloss White with 41.0359 feet

Pictured 41.0973 Gloss White

A traditional rail which will give a Victorian touch of authenticity to any room but will also create an elegant look to a contemporary interior. This radiator boasts high outputs to ensure the whole room is warm. Comes with the option of traditional legs and in gloss white, matt anthracite, matt black or bare metal finishes. Also available in two, four and six columns.

FEATURES

- Tested to BS EN 442 standards
- 5 Year Manufacturer's Warranty*
- Matching colour wall fixing sets
- Radiator feet option available to get the classic look
- Material thickness 1.5mm
- Doesn't require flow diverter

* With conditions

Technical Tables & Drawings
Page 430-431

Warranty 5 Year

Heating

All Electric

Dual-Fuel

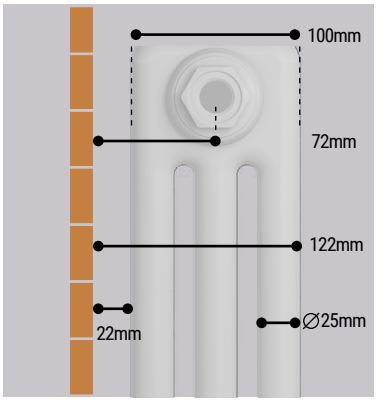

Traditional Range

IMPERIA 3 COLUMN - GLOSS WHITE

300mm Height - Horizontal

Imperia Three Column Radiators - Gloss White

Width	Delta △T30 Watts	Delta △T30 BTU	Delta △T50 Watts	Delta △T50 BTU	Element Output	Element Type	Code	£ Ex VAT	£ Inc VAT
830mm	293	1000	562	1917	450W	A, A+, C, E*, H	41.0940	250.00	**300.00**
1010mm	358	1221	708	2415	600W	A, A+, C, E*, H	41.0941	298.00	**357.60**
1145mm	407	1388	830	2831	600W	A, A+, C, E*, H	41.0401	333.00	**399.60**
1370mm	488	1665	1026	3499	750W	A, A+, C, E*, H	41.0402	393.00	**471.60**
1460mm	520	1774	1126	3840	750W	A, A+, C, E*, H	41.0942	419.00	**502.80**
1640mm	585	1995	1303	4444	900W	A, A+, C, E*, H	41.0943	467.00	**560.40**

*600w Type E Element can be fitted

450mm Height - Horizontal

Imperia Three Column Radiators - Gloss White

Width	Delta △T30 Watts	Delta △T30 BTU	Delta △T50 Watts	Delta △T50 BTU	Element Output	Element Type	Code	£ Ex VAT	£ Inc VAT
605mm	299	1020	585	1995	450W	A, A+	41.0952	221.00	**265.20**
830mm	414	1412	810	2763	600W	A, A+, C, H	41.0953	293.00	**351.60**
1010mm	506	1726	990	3376	750W	A, A+, C, H	41.0954	349.00	**418.80**
1145mm	575	1961	1125	3837	900W	A, A+, C, H	41.0955	392.00	**470.40**
1460mm	736	2510	1440	4911	1200W	A+, H	41.0956	492.00	**590.40**

*600w Type E Element can be fitted

TECHNICAL INFORMATION

All measurements in Height by Width. Radiators that are electric only are restricted to the heat output of the elements. Element size can be increased to full capacity of rail if using element type C, E or H. For element types see pages 324-337. For matching valves see pages 338-353. For indirect heating systems. Tappings are the width of the rail and 72mm off the wall. Projection from wall 122mm. Prices include radiator and wall fixings sets, valves extra.

600mm Height - Horizontal

Imperia Three Column Radiators - Gloss White

Width	Delta △T30 Watts	Delta △T30 BTU	Delta △T50 Watts	Delta △T50 BTU	Element Output	Element Type	Code	£ Ex VAT	£ Inc VAT
425mm	270	921	522	1781	450W	A, A+	41.0403	187.00	**224.40**
470mm	300	1023	580	1978	450W	A, A+, C, H	41.0404	203.00	**243.60**
515mm	330	1126	638	2176	450W	A, A+, C, H	41.0405	219.00	**262.80**
560mm	360	1228	696	2374	600W	A+, C, H	41.0406	237.00	**284.40**
605mm	390	1330	754	2572	600W	A, A+, C, H	41.0349	276.00	**331.20**
830mm	540	1842	1044	3561	900W	A+, C, H	41.0348	364.00	**436.80**
1010mm	660	2251	1276	4352	1000W	A, A+, C, H	41.0407	401.00	**481.20**
1145mm	750	2558	1450	4945	1200W	A, A+, H	41.0347	490.00	**588.00**
1460mm	960	3274	1856	6329	1200W	A+, H	41.0408	565.00	**678.00**
1640mm	1080	3683	2088	7121	1200W	A+, H	41.0967	631.00	**757.20**
1820mm	1200	4092	2320	7912	1200W	A+, H	41.0968	696.00	**835.20**

*600w Type E Element can be fitted

1800mm Height - Vertical

Imperia Three Column Radiators - Gloss White

Width	Delta △T30 Watts	Delta △T30 BTU	Delta △T50 Watts	Delta △T50 BTU	Element Output	Element Type	Code	£ Ex VAT	£ Inc VAT
290mm	500	1705	994	3390	N/A	N/A	41.0409	276.00	**331.20**
380mm	667	2275	1326	4522	N/A	N/A	41.0351	356.00	**427.20**
470mm	834	2844	1657	5651	N/A	N/A	41.0350	428.00	**513.60**
515mm	917	3127	1823	6217	N/A	N/A	41.0973	486.00	**583.20**
560mm	1001	3414	1988	6780	N/A	N/A	41.0974	524.00	**628.80**
605mm	1084	3697	2154	7346	N/A	N/A	41.0975	562.00	**674.40**
650mm	1168	3983	2320	7912	N/A	N/A	41.0976	600.00	**720.00**

Pictured 41.0347 Gloss White

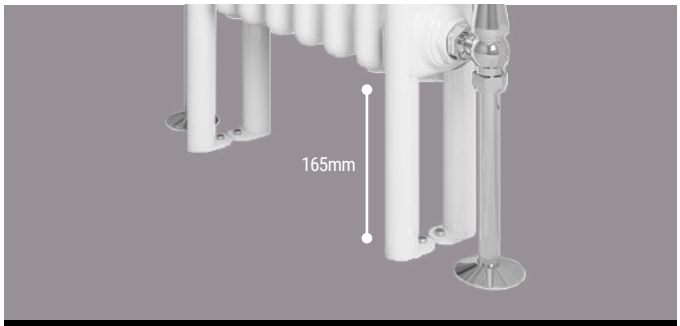

Imperia Radiator Feet

Description	Code	£ Ex VAT	£ Inc VAT
Imperia 3 Column Radiator Feet (pair) Gloss White	41.0359	38.00	**45.60**

Round Vent Caps
Page 357

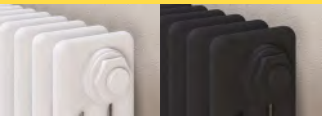

Imperia Towel Hangers
Page 355

Traditional Valves
Page 341&352

Imperia Robe Hooks
Page 355

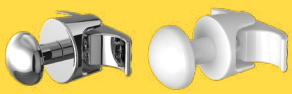

Traditional Range

IMPERIA 3 COLUMN - MATT ANTHRACITE

Pictured 41.0411 Matt Anthracite with 41.0360 feet

Pictured 41.0957 Matt Anthracite

Pictured 41.0979 Matt Anthracite with 41.0360 feet

A traditional rail which will give a Victorian touch of authenticity to any room but will also create an elegant look to a contemporary interior. This radiator boasts high outputs to ensure the whole room is warm. Comes with the option of traditional legs and in gloss white, matt anthracite, matt black or bare metal finishes. Also available in two, four and six columns.

FEATURES

- Tested to BS EN 442 standards
- 5 Year Manufacturer's Warranty*
- Matching colour wall fixing sets
- Radiator feet option available to get the classic look
- Material thickness 1.5mm
- Doesn't require flow diverter

* With conditions

Technical Tables & Drawings
Page 430-431

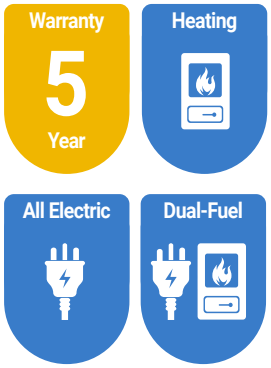

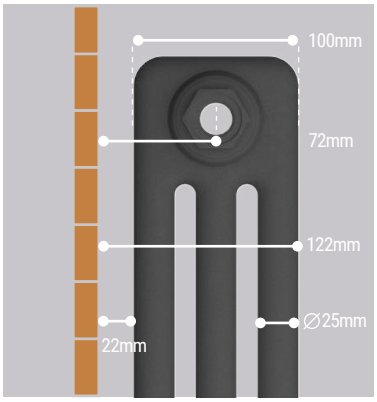

Traditional Range

IMPERIA 3 COLUMN - MATT ANTHRACITE

300mm Height - Horizontal

Imperia Three Column Radiators - Matt Anthracite

Width	Delta △T30 Watts	Delta △T30 BTU	Delta △T50 Watts	Delta △T50 BTU	Element Output	Element Type	Code	£ Ex VAT	£ Inc VAT
830mm	293	1000	562	1917	450W	A, A+, C, E*, H	41.0944	250.00	**300.00**
1010mm	358	1221	708	2415	600W	A, A+, C, E*, H	41.0945	298.00	**357.60**
1145mm	407	1388	830	2831	600W	A, A+, C, E*, H	41.0410	333.00	**399.60**
1370mm	488	1665	1026	3499	750W	A, A+, C, E*, H	41.0411	393.00	**471.60**
1460mm	520	1774	1126	3840	750W	A, A+, C, E*, H	41.0946	419.00	**502.80**
1640mm	585	1995	1303	4444	900W	A, A+, C, E*, H	41.0947	467.00	**560.40**

*600w Type E Element can be fitted

450mm Height - Horizontal

Imperia Three Column Radiators - Matt Anthracite

Width	Delta △T30 Watts	Delta △T30 BTU	Delta △T50 Watts	Delta △T50 BTU	Element Output	Element Type	Code	£ Ex VAT	£ Inc VAT
605mm	299	1020	585	1995	450W	A, A+	41.0957	221.00	**265.20**
830mm	414	1412	810	2763	600W	A, A+, C, H	41.0958	293.00	**351.60**
1010mm	506	1726	990	3376	750W	A, A+, C, H	41.0959	349.00	**418.80**
1145mm	575	1961	1125	3837	900W	A, A+, C, H	41.0960	392.00	**470.40**
1460mm	736	2510	1440	4911	1200W	A+, H	41.0961	492.00	**590.40**

*600w Type E Element can be fitted

TECHNICAL INFORMATION

All measurements in Height by Width. Radiators that are electric only are restricted to the heat output of the elements. Element size can be increased to full capacity of rail if using element type C, E or H. For element types see pages 324-337. For matching valves see pages 338-353. For indirect heating systems. Tappings are the width of the rail and 72mm off the wall. Projection from wall 122mm. Prices include radiator and wall fixings sets, valves extra.

600mm Height - Horizontal

Imperia Three Column Radiators - Matt Anthracite

Width	Delta △T30 Watts	Delta △T30 BTU	Delta △T50 Watts	Delta △T50 BTU	Element Output	Element Type	Code	£ Ex VAT	£ Inc VAT
425mm	270	921	522	1781	450W	A, A+	41.0412	187.00	**224.40**
470mm	300	1023	580	1978	450W	A, A+, C, H	41.0413	203.00	**243.60**
515mm	330	1126	638	2176	450W	A, A+, C, H	41.0414	219.00	**262.80**
560mm	360	1228	696	2374	600W	A+, C, H	41.0415	237.00	**284.40**
605mm	390	1330	754	2572	600W	A, A+, C, H	41.0354	276.00	**331.20**
830mm	540	1842	1044	3561	900W	A+, C, H	41.0353	364.00	**436.80**
1010mm	660	2251	1276	4352	1000W	A, A+, C, H	41.0416	401.00	**481.20**
1145mm	750	2558	1450	4945	1200W	A, A+, H	41.0352	490.00	**588.00**
1460mm	960	3274	1856	6329	1200W	A+, H	41.0417	565.00	**678.00**
1640mm	1080	3683	2088	7121	1200W	A+, H	41.0969	631.00	**757.20**
1820mm	1200	4092	2320	7912	1200W	A+, H	41.0970	696.00	**835.20**

*600w Type E Element can be fitted

1800mm Height - Vertical

Imperia Three Column Radiators - Matt Anthracite

Width	Delta △T30 Watts	Delta △T30 BTU	Delta △T50 Watts	Delta △T50 BTU	Element Output	Element Type	Code	£ Ex VAT	£ Inc VAT
290mm	500	1705	994	3390	N/A	N/A	41.0418	276.00	**331.20**
380mm	667	2275	1326	4522	N/A	N/A	41.0356	356.00	**427.20**
470mm	834	2844	1657	5651	N/A	N/A	41.0355	428.00	**513.60**
515mm	917	3127	1823	6217	N/A	N/A	41.0977	486.00	**583.20**
560mm	1001	3414	1988	6780	N/A	N/A	41.0978	524.00	**628.80**
605mm	1084	3697	2154	7346	N/A	N/A	41.0979	562.00	**674.40**
650mm	1168	3983	2320	7912	N/A	N/A	41.0980	600.00	**720.00**

Pictured 41.0417 Matt Anthracite

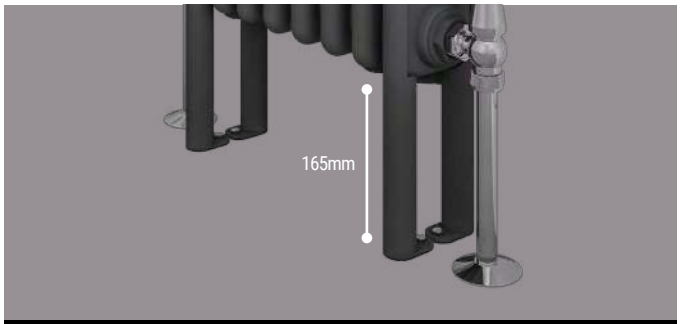

Imperia Radiator Feet

Description	Code	£ Ex VAT	£ Inc VAT
Imperia 3 Column Radiator Feet (pair) Matt Anthracite	41.0360	38.00	**45.60**

Round Vent Caps
Page 357

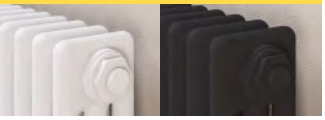

Imperia Towel Hangers
Page 355

Traditional Valves
Page 341&352

Imperia Robe Hooks
Page 355

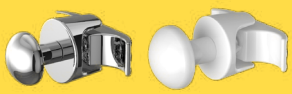

Traditional Range

IMPERIA 3 COLUMN - MATT BLACK

Pictured 41.0948 Matt Black

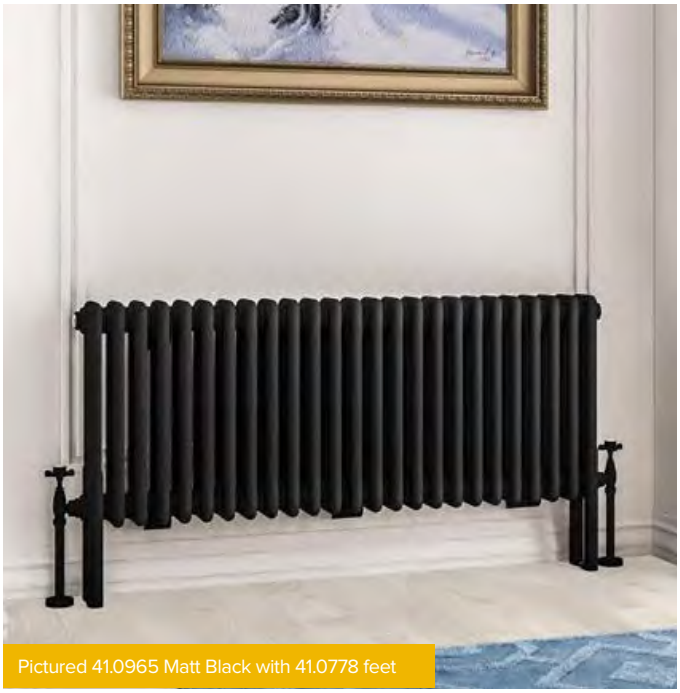

Pictured 41.0965 Matt Black with 41.0778 feet

Pictured 41.0777 Matt Black

A traditional rail which will give a Victorian touch of authenticity to any room but will also create an elegant look to a contemporary interior. This radiator boasts high outputs to ensure the whole room is warm. Comes with the option of traditional legs and in gloss white, matt anthracite, matt black or bare metal finishes. Also available in two, four and six columns.

FEATURES

- Tested to BS EN 442 standards
- 5 Year Manufacturer's Warranty*
- Matching colour wall fixing sets
- Radiator feet option available to get the classic look
- Material thickness 1.5mm
- Doesn't require flow diverter

* With conditions

Technical Tables & Drawings
Page 430-431

Warranty 5 Year

Heating

All Electric

Dual-Fuel

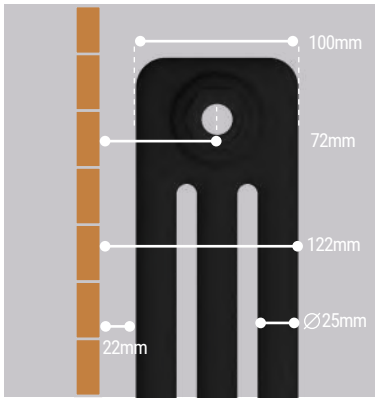

Traditional Range

IMPERIA 3 COLUMN - MATT BLACK

300mm Height - Horizontal

Imperia Three Column Radiators - Matt Black

Width	Delta △T30 Watts	Delta △T30 BTU	Delta △T50 Watts	Delta △T50 BTU	Element Output	Element Type	Code	£ Ex VAT	£ Inc VAT
830mm	293	1000	562	1917	450W	A, A+, C, E*, H	41.0948	250.00	**300.00**
1010mm	358	1221	708	2415	600W	A, A+, C, E*, H	41.0949	298.00	**357.60**
1145mm	407	1388	830	2831	600W	A, A+, C, E*, H	41.0764	333.00	**399.60**
1370mm	488	1665	1026	3499	750W	A, A+, C, E*, H	41.0765	393.00	**471.60**
1460mm	520	1774	1126	3840	750W	A, A+, C, E*, H	41.0950	419.00	**502.80**
1640mm	585	1995	1303	4444	900W	A, A+, C, E*, H	41.0951	467.00	**560.40**

*600w Type E Element can be fitted

450mm Height - Horizontal

Imperia Three Column Radiators - Matt Black

Width	Delta △T30 Watts	Delta △T30 BTU	Delta △T50 Watts	Delta △T50 BTU	Element Output	Element Type	Code	£ Ex VAT	£ Inc VAT
605mm	299	1020	585	1995	450W	A, A+	41.0962	221.00	**265.20**
830mm	414	1412	810	2763	600W	A, A+, C, H	41.0963	293.00	**351.60**
1010mm	506	1726	990	3376	750W	A, A+, C, H	41.0964	349.00	**418.80**
1145mm	575	1961	1125	3837	900W	A, A+, C, H	41.0965	392.00	**470.40**
1460mm	736	2510	1440	4911	1200W	A+, H	41.0966	492.00	**590.40**

*600w Type E Element can be fitted

TECHNICAL INFORMATION

All measurements in Height by Width. Radiators that are electric only are restricted to the heat output of the elements. Element size can be increased to full capacity of rail if using element type C, E or H. For element types see pages 324-337. For matching valves see pages 338-353. For indirect heating systems. Tappings are the width of the rail and 72mm off the wall. Projection from wall 122mm. Prices include radiator and wall fixings sets, valves extra.

600mm Height - Horizontal

Imperia Three Column Radiators - Matt Black

Width	Delta △T30 Watts	Delta △T30 BTU	Delta △T50 Watts	Delta △T50 BTU	Element Output	Element Type	Code	£ Ex VAT	£ Inc VAT
425mm	270	921	522	1781	450W	A, A+	41.0766	187.00	**224.40**
470mm	300	1023	580	1978	450W	A, A+, C, H	41.0767	203.00	**243.60**
515mm	330	1126	638	2176	450W	A, A+, C, H	41.0768	219.00	**262.80**
560mm	360	1228	696	2374	600W	A+, C, H	41.0769	237.00	**284.40**
605mm	390	1330	754	2572	600W	A, A+, C, H	41.0770	276.00	**331.20**
830mm	540	1842	1044	3561	900W	A+, C, H	41.0771	364.00	**436.80**
1010mm	660	2251	1276	4352	1000W	A, A+, C, H	41.0772	401.00	**481.20**
1145mm	750	2558	1450	4945	1200W	A, A+, H	41.0773	490.00	**588.00**
1460mm	960	3274	1856	6329	1200W	A+, H	41.0774	565.00	**678.00**
1640mm	1080	3683	2088	7121	1200W	A+, H	41.0971	631.00	**757.20**
1820mm	1200	4092	2320	7912	1200W	A+, H	41.0972	696.00	**835.20**

*600w Type E Element can be fitted

1800mm Height - Vertical

Imperia Three Column Radiators - Matt Black

Width	Delta △T30 Watts	Delta △T30 BTU	Delta △T50 Watts	Delta △T50 BTU	Element Output	Element Type	Code	£ Ex VAT	£ Inc VAT
290mm	500	1705	994	3390	N/A	N/A	41.0775	276.00	**331.20**
380mm	667	2275	1326	4522	N/A	N/A	41.0776	356.00	**427.20**
470mm	834	2844	1657	5651	N/A	N/A	41.0777	428.00	**513.60**
515mm	917	3127	1823	6217	N/A	N/A	41.0981	486.00	**583.20**
560mm	1001	3414	1988	6780	N/A	N/A	41.0982	524.00	**628.80**
605mm	1084	3697	2154	7346	N/A	N/A	41.0983	562.00	**674.40**
650mm	1168	3983	2320	7912	N/A	N/A	41.0984	600.00	**720.00**

Pictured 41.0772 Matt Black with 41.0778 feet

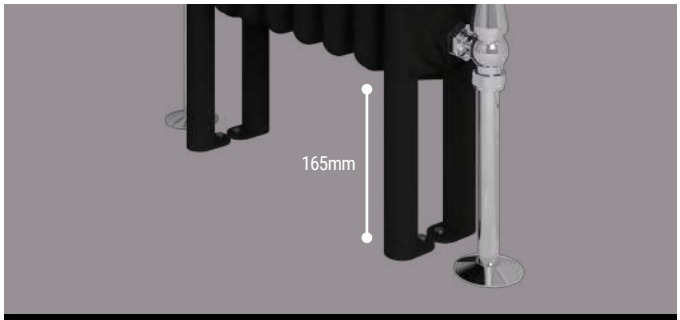

Imperia Radiator Feet

Description	Code	£ Ex VAT	£ Inc VAT
Imperia 3 Column Radiator Feet (pair) Matt Black	41.0778	38.00	**45.60**

Round Vent Caps
Page 357

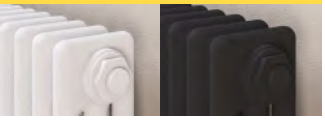

Imperia Towel Hangers
Page 355

Traditional Valves
Page 341&352

Imperia Robe Hooks
Page 355

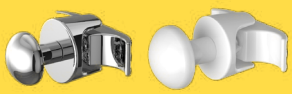

Traditional Range

IMPERIA 4 COLUMN

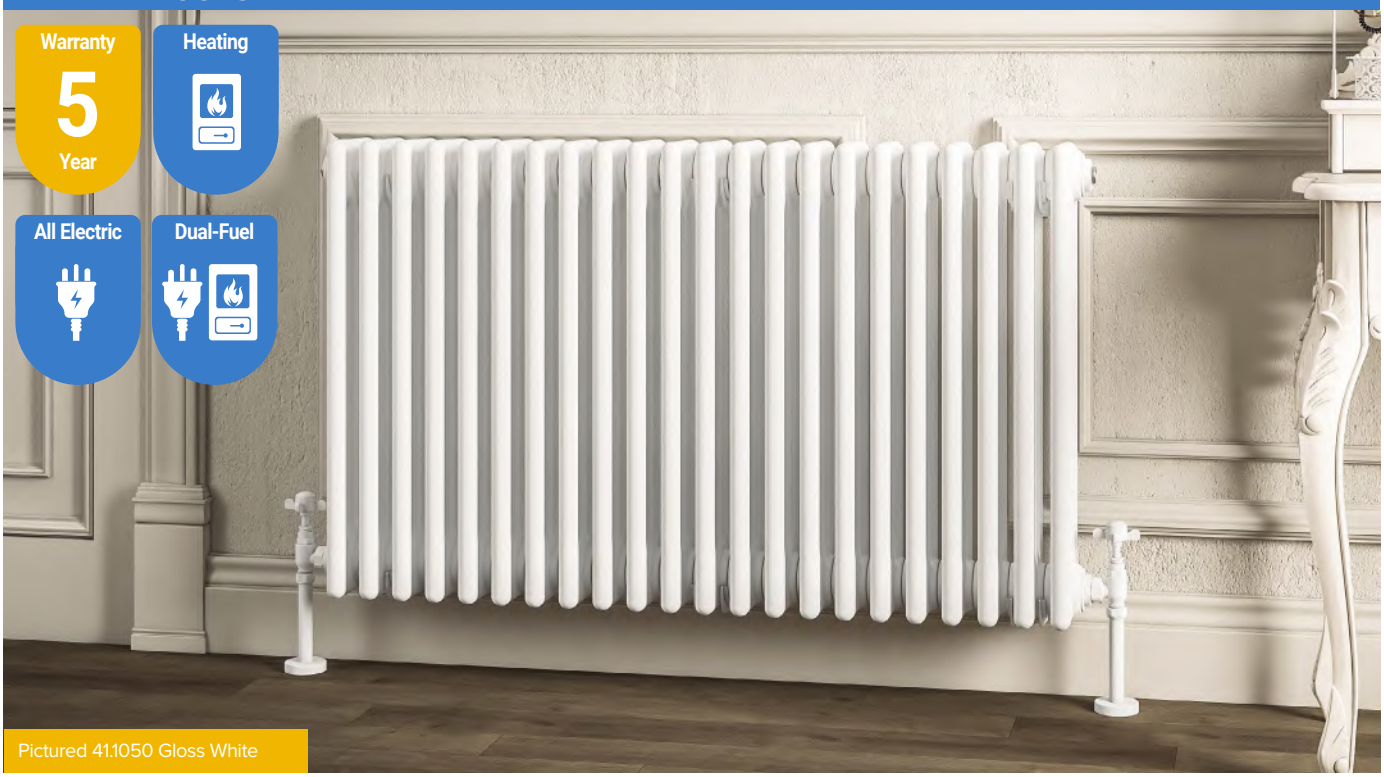

Pictured 41.1050 Gloss White

Traditional Valves
Page 341&352

We recommend radiator feet to be used with 600mmx1460mm & 600mmx1640mm Imperia 4 Column Radiators.

Pictured 41.1039 Matt Anthracite

A traditional rail which will give a Victorian touch of authenticity to any room but will also create an elegant look to a contemporary interior. This radiator boasts high outputs to ensure the whole room is warm. Comes with the option of traditional legs and in gloss white, matt anthracite or matt black finishes. Also available in two, three and six columns.

FEATURES

- Tested to BS EN 442 standards
- 5 Year Manufacturer's Warranty*
- Matching colour wall fixing sets
- 300mm height option for limited spaces
- Radiator feet option available to get the classic look
- Material thickness 1.5mm
- Doesn't require flow diverter

* With conditions

Technical Tables & Drawings
Page 430-431

Round Vent Caps
Page 357

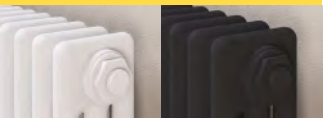

Rivassa Robe Hooks
Page 355

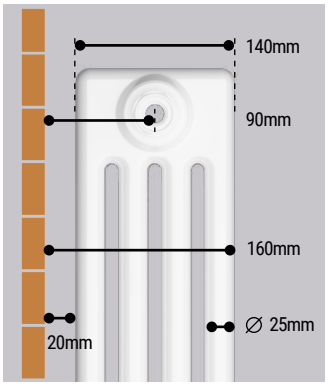

Traditional Range

IMPERIA 4 COLUMN

Pictured 41.1061 Matt Black

We recommend radiator feet to be used with 600mmx1460mm & 600mmx1640mm Imperia 4 Column Radiators.

Gloss White - Horizontal

Imperia Four Column Radiators - Gloss White 300mm Height

Width	Delta △T30 Watts	Delta △T30 BTU	Delta △T50 Watts	Delta △T50 BTU	Element Output	Element Type	Code	£ Ex VAT	£ Inc VAT
830mm	378	1289	781	2664	600W	A, A+, C, E*, H	41.0990	329.00	**394.80**
1010mm	462	1576	878	2994	750W	A, A+, C, E*, H	41.0991	398.00	**477.60**
1145mm	525	1791	998	3404	750W	A, A+, C, E, H	41.1032	449.00	**538.80**
1370mm	630	2149	1197	4082	900W	A, A+, C, E, H	41.1033	531.00	**637.20**
1460mm	672	2292	1277	4355	1000W	A, A+, H	41.1034	564.00	**676.80**
1640mm	756	2578	1436	4897	1200W	A, A+, H	41.1035	630.00	**756.00**

Imperia Four Column Radiators - Gloss White 600mm Height

Width	Delta △T30 Watts	Delta △T30 BTU	Delta △T50 Watts	Delta △T50 BTU	Element Output	Element Type	Code	£ Ex VAT	£ Inc VAT
425mm	361	1232	688	2347	450W	A, A+, C, H	41.1048	233.00	**279.60**
830mm	722	2463	1375	4689	1000W	A, A+, H	41.1049	438.00	**525.60**
1010mm	882	3008	1681	5733	1200W	A, A+	41.1050	533.00	**639.60**
1145mm	1003	3421	1910	6514	1200W	A, A+	41.1051	600.00	**720.00**
1460mm	1283	4376	2445	8338	N/A	N/A	41.1052	758.00	**909.60**
1640mm	1444	4925	2750	9378	N/A	N/A	41.1053	851.00	**1021.20**

*600w Type E Element can be fitted

Matt Anthracite - Horizontal

Imperia Four Column Radiators - Matt Anthracite 300mm Height

Width	Delta △T30 Watts	Delta △T30 BTU	Delta △T50 Watts	Delta △T50 BTU	Element Output	Element Type	Code	£ Ex VAT	£ Inc VAT
830mm	378	1289	781	2664	600W	A, A+, C, E*, H	41.1036	329.00	**394.80**
1010mm	462	1576	878	2994	750W	A, A+, C, E*, H	41.1037	398.00	**477.60**
1145mm	525	1791	998	3404	750W	A, A+, C, E, H	41.1038	449.00	**538.80**
1370mm	630	2149	1197	4082	900W	A, A+, C, E, H	41.1039	531.00	**637.20**
1460mm	672	2292	1277	4355	1000W	A, A+, H	41.1040	564.00	**676.80**
1640mm	756	2578	1436	4897	1200W	A, A+, H	41.1041	630.00	**756.00**

Imperia Four Column Radiators - Matt Anthracite 600mm Height

Width	Delta △T30 Watts	Delta △T30 BTU	Delta △T50 Watts	Delta △T50 BTU	Element Output	Element Type	Code	£ Ex VAT	£ Inc VAT
425mm	361	1232	688	2347	450W	A, A+, C, H	41.1054	233.00	**279.60**
830mm	722	2463	1375	4689	1000W	A, A+, H	41.1055	438.00	**525.60**
1010mm	882	3008	1681	5733	1200W	A, A+	41.1056	533.00	**639.60**
1145mm	1003	3421	1910	6514	1200W	A, A+	41.1057	600.00	**720.00**
1460mm	1283	4376	2445	8338	N/A	N/A	41.1058	758.00	**909.60**
1640mm	1444	4925	2750	9378	N/A	N/A	41.1059	851.00	**1021.20**

*600w Type E Element can be fitted

Matt Black - Horizontal

Imperia Four Column Radiators - Matt Black 300mm Height

Width	Delta △T30 Watts	Delta △T30 BTU	Delta △T50 Watts	Delta △T50 BTU	Element Output	Element Type	Code	£ Ex VAT	£ Inc VAT
830mm	378	1289	781	2664	600W	A, A+, C, E*, H	41.1042	329.00	**394.80**
1010mm	462	1576	878	2994	750W	A, A+, C, E*, H	41.1043	398.00	**477.60**
1145mm	525	1791	998	3404	750W	A, A+, C, E, H	41.1044	449.00	**538.80**
1370mm	630	2149	1197	4082	900W	A, A+, C, E, H	41.1045	531.00	**637.20**
1460mm	672	2292	1277	4355	1000W	A, A+, H	41.1046	564.00	**676.80**
1640mm	756	2578	1436	4897	1200W	A, A+, H	41.1047	630.00	**756.00**

Imperia Four Column Radiators - Matt Black 600mm Height

Width	Delta △T30 Watts	Delta △T30 BTU	Delta △T50 Watts	Delta △T50 BTU	Element Output	Element Type	Code	£ Ex VAT	£ Inc VAT
425mm	361	1232	688	2347	450W	A, A+, C, H	41.1060	233.00	**279.60**
830mm	722	2463	1375	4689	1000W	A, A+, H	41.1061	438.00	**525.60**
1010mm	882	3008	1681	5733	1200W	A, A+	41.1062	533.00	**639.60**
1145mm	1003	3421	1910	6514	1200W	A, A+	41.1063	600.00	**720.00**
1460mm	1283	4376	2445	8338	N/A	N/A	41.1064	758.00	**909.60**
1640mm	1444	4925	2750	9378	N/A	N/A	41.1065	851.00	**1021.20**

*600w Type E Element can be fitted

TECHNICAL INFORMATION

All measurements in Height by Width. Radiators that are electric only are restricted to the heat output of the elements. Element size can be increased to full capacity of rail if using element type C, E or H. For element types see pages 324-337. For matching valves see pages 338-353. For indirect heating systems. Tappings are the width of the rail and 90mm off the wall. Projection from wall 160mm. Prices include radiator and wall fixings sets, valves extra.

IMPERIA 4 COLUMN RADIATOR FEET

Description	Code	£ Ex VAT	£ Inc VAT
Imperia 4 Column Radiator Feet (pair) - Gloss White	41.1066	43.00	**51.60**
Imperia 4 Column Radiator Feet (pair) - Matt Anthracite	41.1067	43.00	**51.60**
Imperia 4 Column Radiator Feet (pair) - Matt Black	41.1068	43.00	**51.60**

Traditional Range

IMPERIA 6 COLUMN - GLOSS WHITE

Pictured 41.1070 Gloss White with 41.1088 feet

We recommend radiator feet to be used with all Imperia 6 Column Radiators.

Pictured 41.1083 Gloss White

A traditional rail which will give a Victorian touch of authenticity to any room but will also create an elegant look to a contemporary interior. This radiator boasts high outputs to ensure the whole room is warm. Comes with the option of traditional legs and in gloss white, matt anthracite or matt black finishes. Also available in two, three and four columns.

FEATURES

- Tested to BS EN 442 standards
- 5 Year Manufacturer's Warranty*
- Matching colour wall fixing sets
- 300mm height option for limited spaces
- Radiator feet option available to get the classic look
- Material thickness 1.5mm
- Doesn't require flow diverter

* With conditions

Technical Tables & Drawings
Page 432-433

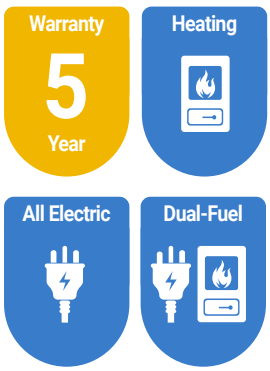

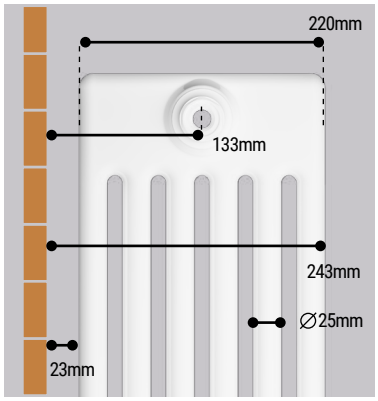

300mm Height - Horizontal

Imperia Six Column Radiators - Gloss White

Width	Delta △T30 Watts	Delta △T30 BTU	Delta △T50 Watts	Delta △T50 BTU	Element Output	Element Type	Code	£ Ex VAT	£ Inc VAT
830mm	535	1825	1008	3438	900W	A, A+, C, H	41.1069	452.00	**542.40**
1010mm	654	2231	1232	4202	1000W	A, A+, C, H	41.1070	549.00	**658.80**
1145mm	743	2534	1400	4774	1200W	A, A+, H	41.1071	619.00	**742.80**
1370mm	892	3042	1680	5729	1200W	A, A+, H	41.1072	735.00	**882.00**

Imperia Six Column Radiator Feet

Description	Code	£ Ex VAT	£ Inc VAT
Imperia 6 Column Radiator Feet (pair) - Gloss White	41.1088	54.00	**64.80**

600mm Height - Horizontal

Imperia Six Column Radiators - Gloss White

Width	Delta △T30 Watts	Delta △T30 BTU	Delta △T50 Watts	Delta △T50 BTU	Element Output	Element Type	Code	£ Ex VAT	£ Inc VAT
425mm	478	1630	993	3387	600W	H	41.1081	328.00	**393.60**
605mm	691	2357	1434	4890	900W	C, H	41.1082	459.00	**550.80**
830mm	956	3260	1986	6773	1200W	A, A+, H	41.1083	623.00	**747.60**
1010mm	1169	3987	2427	8277	1200W	A, A+, H	41.1084	758.00	**909.60**
1145mm	1328	4529	2758	9405	N/A	N/A	41.1085	856.00	**1027.20**
1370mm	1594	5436	3310	11288	N/A	N/A	41.1086	1018.00	**393.60**
1460mm	1700	5797	3530	12038	N/A	N/A	41.1087	1083.00	**1299.60**

Traditional Range

IMPERIA 6 COLUMN - MATT ANTHRACITE

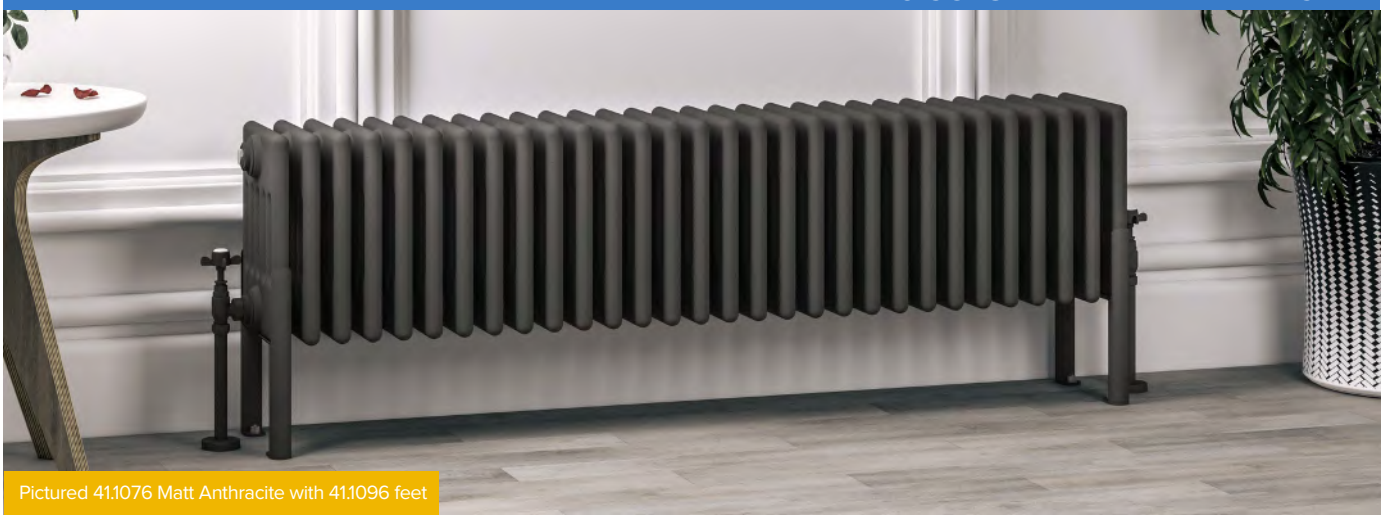

Pictured 41.1076 Matt Anthracite with 41.1096 feet

We recommend radiator feet to be used with all Imperia 6 Column Radiators.

Pictured 41.1093 Matt Anthracite with 41.1096 feet

FEATURES

- Tested to BS EN 442 standards
- 5 Year Manufacturer's Warranty*
- Matching colour wall fixing sets
- 300mm height option for limited spaces
- Radiator feet option available to get the classic look
- Material thickness 1.5mm
- Doesn't require flow diverter

* With conditions

Technical Tables & Drawings
Page 432-433

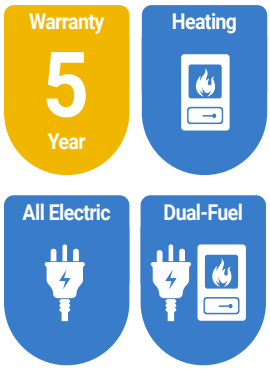

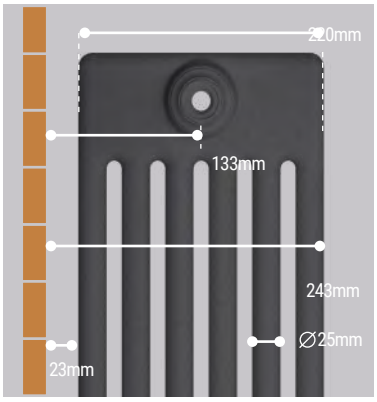

TECHNICAL INFORMATION

All measurements in Height by Width. Radiators that are electric only are restricted to the heat output of the elements. Element size can be increased to full capacity of rail if using element type C, E or H. For element types see pages 324-337. For matching valves see pages 338-353. For indirect heating systems. Tappings are the width of the rail and 133mm off the wall. Projection from wall 243mm. Prices include radiator and wall fixings sets, valves extra.

300mm Height - Horizontal

Imperia Six Column Radiators -Matt Anthracite

Width	Delta △T30 Watts	Delta △T30 BTU	Delta △T50 Watts	Delta △T50 BTU	Element Output	Element Type	Code	£ Ex VAT	£ Inc VAT
830mm	535	1825	1008	3438	900W	A, A+, C, H	41.1073	452.00	**542.40**
1010mm	654	2231	1232	4202	1000W	A, A+, C, H	41.1074	549.00	**658.80**
1145mm	743	2534	1400	4774	1200W	A, A+, H	41.1075	619.00	**742.80**
1370mm	892	3042	1680	5729	1200W	A, A+, H	41.1076	735.00	**882.00**

Imperia Six Column Radiator Feet

Description	Code	£ Ex VAT	£ Inc VAT
Imperia 6 Column Radiator Feet (pair) - Matt Anthracite	41.1096	54.00	**64.80**

600mm Height - Horizontal

Imperia Six Column Radiators - Matt Anthracite

Width	Delta △T30 Watts	Delta △T30 BTU	Delta △T50 Watts	Delta △T50 BTU	Element Output	Element Type	Code	£ Ex VAT	£ Inc VAT
425mm	478	1630	993	3387	600W	H	41.1089	328.00	**393.60**
605mm	691	2357	1434	4890	900W	C, H	41.1090	459.00	**550.80**
830mm	956	3260	1986	6773	1200W	A, A+, H	41.1091	623.00	**747.60**
1010mm	1169	3987	2427	8277	1200W	A, A+, H	41.1092	758.00	**909.60**
1145mm	1328	4529	2758	9405	N/A	N/A	41.1093	856.00	**1027.20**
1370mm	1594	5436	3310	11288	N/A	N/A	41.1094	1018.00	**393.60**
1460mm	1700	5797	3530	12038	N/A	N/A	41.1095	1083.00	**1299.60**

Traditional Range

IMPERIA 6 COLUMN - MATT BLACK

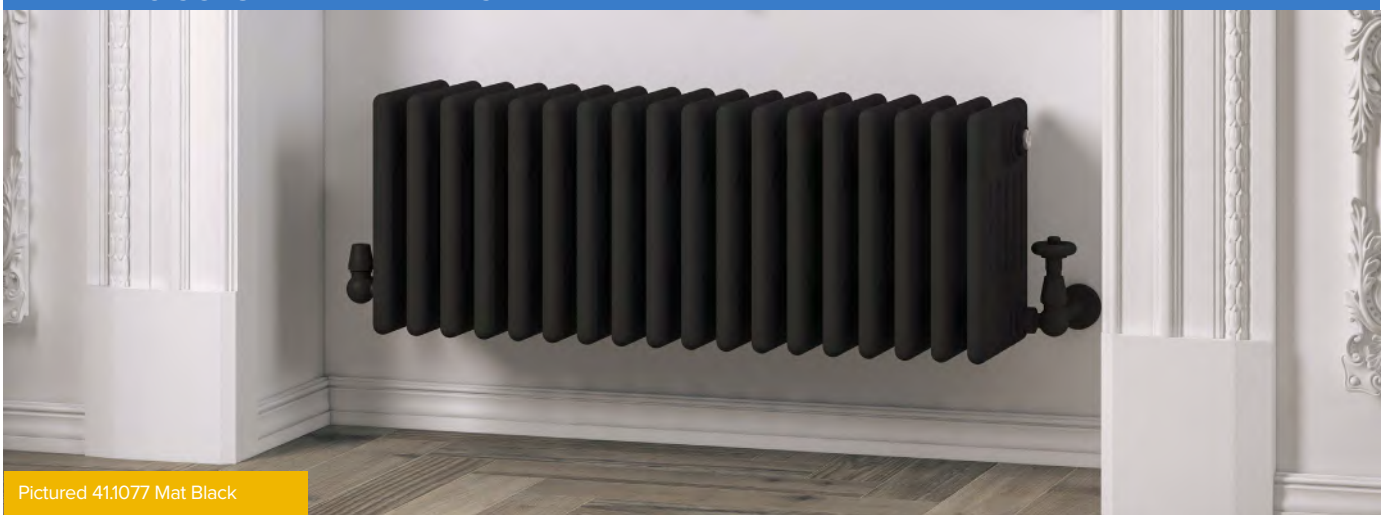

Pictured 41.1077 Mat Black

We recommend radiator feet to be used with all Imperia 6 Column Radiators.

Pictured 41.1100 Matt Black with 41.1104 feet

A traditional rail which will give a Victorian touch of authenticity to any room but will also create an elegant look to a contemporary interior. This radiator boasts high outputs to ensure the whole room is warm. Comes with the option of traditional legs and in gloss white, matt anthracite or matt black finishes. Also available in two, three and four columns.

FEATURES

- Tested to BS EN 442 standards
- 5 Year Manufacturer's Warranty*
- Matching colour wall fixing sets
- 300mm height option for limited spaces
- Radiator feet option available to get the classic look
- Material thickness 1.5mm
- Doesn't require flow diverter

* With conditions

Technical Tables & Drawings
Page 432-433

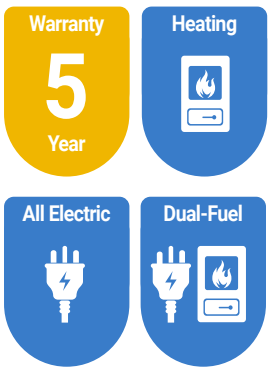

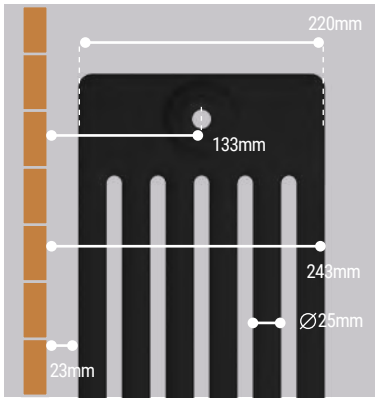

300mm Height - Horizontal

Imperia Six Column Radiators - Matt Black

Width	Delta △T30 Watts	Delta △T30 BTU	Delta △T50 Watts	Delta △T50 BTU	Element Output	Element Type	Code	£ Ex VAT	£ Inc VAT
830mm	535	1825	1008	3438	900W	A, A+, C, H	41.1077	452.00	**542.40**
1010mm	654	2231	1232	4202	1000W	A, A+, C, H	41.1078	549.00	**658.80**
1145mm	743	2534	1400	4774	1200W	A, A+, H	41.1079	619.00	**742.80**
1370mm	892	3042	1680	5729	1200W	A, A+, H	41.1080	735.00	**882.00**

Imperia Six Column Radiator Feet

Description	Code	£ Ex VAT	£ Inc VAT
Imperia 6 Column Radiator Feet (pair) - Matt Black	41.1104	54.00	**64.80**

600mm Height - Horizontal

Imperia Six Column Radiators - Matt Black

Width	Delta △T30 Watts	Delta △T30 BTU	Delta △T50 Watts	Delta △T50 BTU	Element Output	Element Type	Code	£ Ex VAT	£ Inc VAT
425mm	478	1630	993	3387	600W	H	41.1097	328.00	**393.60**
605mm	691	2357	1434	4890	900W	C, H	41.1098	459.00	**550.80**
830mm	956	3260	1986	6773	1200W	A, A+, H	41.1099	623.00	**747.60**
1010mm	1169	3987	2427	8277	1200W	A, A+, H	41.1100	758.00	**909.60**
1145mm	1328	4529	2758	9405	N/A	N/A	41.1101	856.00	**1027.20**
1370mm	1594	5436	3310	11288	N/A	N/A	41.1102	1018.00	**1221.60**
1460mm	1700	5797	3530	12038	N/A	N/A	41.1103	1083.00	**1299.60**

Traditional Range

IMPERIA 6 COLUMN BENCH

Pictured 41.1105 Gloss White

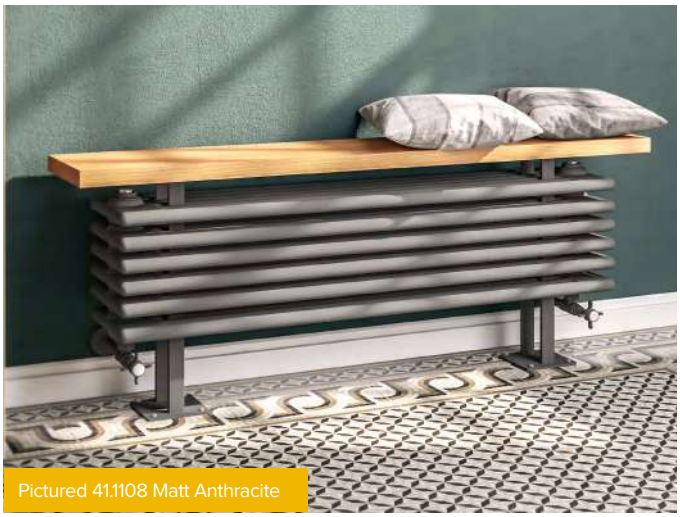

Pictured 41.1108 Matt Anthracite

Combining period elegance with contemporary practicality, the Victorian-style radiator with an oak bench adds a refined touch to any space. The beautifully crafted oak top enhances its timeless design while offering a functional surface, perfect for seating. With powerful heat output to warm the entire room, this radiator is available in gloss white, matt anthracite, or matt black.

FEATURES

- Tested to BS EN 442 standards
- 5 Year Manufacturer's Warranty*
- Floor standing fixing
- Only 480mm height option
- Material thickness 1.5mm
- Bench style column radiator

* With conditions

Technical Tables & Drawings
Page 432-433

TECHNICAL INFORMATION

All measurements in Height by Width. For matching valves see pages 338-353. For indirect heating systems. Tappings from floor 130mm. Prices include radiator and wall fixings sets, valves extra.

Top View

Pictured 41.1110 Matt Black

Gloss White

Imperia Six Column Bench Radiators - 480mm Height

Width	Delta △T30 Watts	Delta △T30 BTU	Delta △T50 Watts	Delta △T50 BTU	Element Output	Element Type	Code	£ Ex VAT	£ Inc VAT
850mm	335	1143	645	2200	N/A	N/A	41.1105	557.00	**668.40**
1200mm	505	1723	974	3322	N/A	N/A	41.1106	639.00	**766.80**

Matt Anthracite

Imperia Six Column Bench Radiators - 480mm Height

Width	Delta △T30 Watts	Delta △T30 BTU	Delta △T50 Watts	Delta △T50 BTU	Element Output	Element Type	Code	£ Ex VAT	£ Inc VAT
850mm	335	1143	645	2200	N/A	N/A	41.1107	557.00	**668.40**
1200mm	505	1723	974	3322	N/A	N/A	41.1108	639.00	**766.80**

Matt Black

Imperia Six Column Bench Radiators - 480mm Height

Width	Delta △T30 Watts	Delta △T30 BTU	Delta △T50 Watts	Delta △T50 BTU	Element Output	Element Type	Code	£ Ex VAT	£ Inc VAT
850mm	335	1143	645	2200	N/A	N/A	41.1109	557.00	**668.40**
1200mm	505	1723	974	3322	N/A	N/A	41.1110	639.00	**766.80**

Traditional Range

IMPERIA MULTIRAIL 2 COLUMN

Pictured 41.0816 Gloss White

Experience timeless elegance with our traditional towel rail Imperia Multirail 2 Column, designed to bring an authentic Victorian touch to your bathroom. Combining classic charm with modern sophistication, this traditional towel rail is available in three colors to seamlessly complement any bathroom decor.

FEATURES

- 38mm diameter vertical bars
- Tested to BS EN 442 standards
- 3 colours available from stock
- Towel rail in traditional column radiator look
- Matching colour wall fixing sets
- Material thickness 1.5mm
- Can be single, dual fuel, or all electric
- 5 Year Manufacturer's Warranty*

* With conditions

Technical Tables & Drawings
Page 432-433

Traditional Valves
Page 341&352

Warranty 5 Year

Heating

All Electric

Dual-Fuel

Traditional Range

IMPERIA MULTIRAIL 2 COLUMN

Pictured 41.0815 Gloss White

Pictured 41.0834 Matt Black

Pictured 41.0828 Matt Anthracite

Imperia Multirail Two Column - Gloss White

Size H x W	Delta △T30 Watts	Delta △T30 BTU	Delta △T50 Watts	Delta △T50 BTU	Element Output	Code	£ Ex VAT	£ Inc VAT
612 x 800mm	259*	884*	495*	1688*	300W	41.0814	254.00	**304.80**
612 x 1000mm	321*	1095*	613*	2091*	300W	41.0815	290.00	**348.00**
832 x 500mm	278	948	532	1815	300W	41.0816	268.00	**321.60**
832 x 600mm	320	1092	613	2091	300W	41.0819	279.00	**334.80**
1140 x 500mm	385	1313	737	2514	450W	41.0817	382.00	**458.40**
1140 x 600mm	443	1511	849	2896	600W	41.0820	397.00	**476.40**
1430 x 500mm	487	1661	937	3196	600W	41.0818	452.00	**542.40**
1430 x 600mm	561	1914	1079	3680	600W	41.0821	471.00	**565.20**

Imperia Multirail Two Column - Matt Anthracite

Size H x W	Delta △T30 Watts	Delta △T30 BTU	Delta △T50 Watts	Delta △T50 BTU	Element Output	Code	£ Ex VAT	£ Inc VAT
612 x 800mm	259*	884*	495*	1688*	300W	41.0822	254.00	**304.80**
612 x 1000mm	321*	1095*	613*	2091*	300W	41.0823	290.00	**348.00**
832 x 500mm	278	948	532	1815	300W	41.0824	268.00	**321.60**
832 x 600mm	320	1092	613	2091	300W	41.0827	279.00	**334.80**
1140 x 500mm	385	1313	737	2514	450W	41.0825	382.00	**458.40**
1140 x 600mm	443	1511	849	2896	600W	41.0828	397.00	**476.40**
1430 x 500mm	487	1661	937	3196	600W	41.0826	452.00	**542.40**
1430 x 600mm	561	1914	1079	3680	600W	41.0829	471.00	**565.20**

Imperia Multirail Two Column - Matt Black

Size H x W	Delta △T30 Watts	Delta △T30 BTU	Delta △T50 Watts	Delta △T50 BTU	Element Output	Code	£ Ex VAT	£ Inc VAT
612 x 800mm	259*	884*	495*	1688*	300W	41.0830	254.00	**304.80**
612 x 1000mm	321*	1095*	613*	2091*	300W	41.0831	290.00	**348.00**
832 x 500mm	278	948	532	1815	300W	41.0832	268.00	**321.60**
832 x 600mm	320	1092	613	2091	300W	41.0835	279.00	**334.80**
1140 x 500mm	385	1313	737	2514	450W	41.0833	382.00	**458.40**
1140 x 600mm	443	1511	849	2896	600W	41.0836	397.00	**476.40**
1430 x 500mm	487	1661	937	3196	600W	41.0834	452.00	**542.40**
1430 x 600mm	561	1914	1079	3680	600W	41.0837	471.00	**565.20**

* Further heat output information available on eastbrooktrade.com **E&OA**

TECHNICAL INFORMATION

All measurements in Height by Width. Radiators that are electric only are restricted to the heat output of the elements. Element size can be increased to full capacity of rail if using element type D, E, F or G. For element types see pages 324-337. For matching valves see pages 338-353. For indirect heating systems. Tappings are approx. 76mm. less than the width of the rail and 63-67mm off the wall. Projection from wall 98-108mm. Prices include radiator and wall fixings sets, valves extra.

All Imperia Multirail 2 Column models shown above are compatible with Element Type A, A+, B, D, E, F and G

Traditional Range

RIVASSA 2 COLUMN

Pictured 81.0003 Gloss White

Pictured 81.0025 Matt Anthracite

Traditional Valves
Page 341&352

Pictured 81.0008 Gloss White with 81.0034 Feet and 8.541 Type H element

A traditional radiator which will give a Victorian touch of authenticity to any room but will also create an elegant look to a contemporary interior. This radiator boasts high outputs to ensure the whole room is warm. Comes with the option of traditional legs and in gloss white, matt anthracite, matt black, bronze effect or chrome effect finishes. Also available in three and four columns.

FEATURES
- Tested to BS EN 442 standards
- 5 Year Manufacturer's Warranty*
- Matching colour wall fixing sets
- 300mm height option for limited spaces
- Radiator feet option available to get the classic look
- Material thickness 1.5mm
- Doesn't require flow diverter

* With conditions

Technical Tables & Drawings
Page 434-435

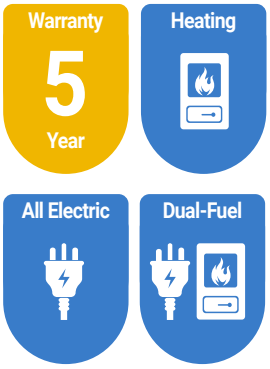

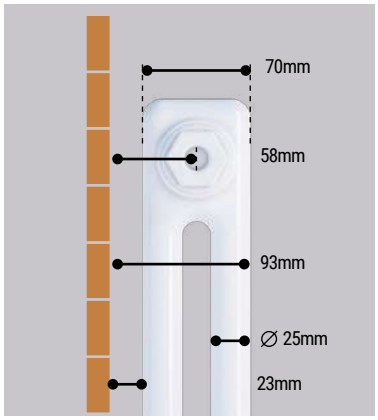

Traditional Range

RIVASSA 2 COLUMN

Gloss White

Rivassa Two Column Radiators - Gloss White 300mm Height

Width	Delta △T30 Watts	Delta △T30 BTU	Delta △T50 Watts	Delta △T50 BTU	Element Output	Element Type	Code	£ Ex VAT	£ Inc VAT
1148mm	322	1099	619	2111	450W	A, A+, C, E*, H	81.0005	466.00	**559.20**
1373mm	386	1317	743	2534	600W	A, A+, C, E*, H	81.0006	558.00	**669.60**

Rivassa Two Column Radiators - Gloss White 600mm Height

Width	Delta △T30 Watts	Delta △T30 BTU	Delta △T50 Watts	Delta △T50 BTU	Element Output	Element Type	Code	£ Ex VAT	£ Inc VAT
428mm	218	744	420	1433	300W	A, A+, C, H	81.0038	213.00	**255.60**
473mm	242	826	467	1593	300W	A, A+, C, H	81.0039	237.00	**284.40**
518mm	266	908	514	1753	300W	A, A+, C, H	81.0040	259.00	**310.80**
563mm	290	989	560	1910	450W	A, A+, C, H	81.0041	284.00	**340.80**
608mm	314	1071	607	2070	450W	A, A+, C, H	81.0007	308.00	**369.60**
833mm	435	1484	841	2868	600W	A, A+, C, E*, H	81.0008	427.00	**512.40**
1010mm	532	1815	1027	3503	750W	A, A+, C, H	81.0077	522.00	**626.40**
1148mm	605	2064	1168	3983	900W	A, A+, H	81.0009	593.00	**711.60**
1460mm	774	2640	1494	5095	1200W	A, A+, H	81.0078	760.00	**912.00**

Rivassa Two Column Radiators - Gloss White 1800mm Height

Width	Delta △T30 Watts	Delta △T30 BTU	Delta △T50 Watts	Delta △T50 BTU	Element Output	Element Type	Code	£ Ex VAT	£ Inc VAT
293mm	421	1436	826	2817	N/A	N/A	81.0002	277.00	**332.40**
383mm	561	1914	1101	3755	N/A	N/A	81.0003	364.00	**436.80**
473mm	702	2394	1377	4696	N/A	N/A	81.0004	456.00	**547.20**

*600w Type E Element can be fitted

Matt Anthracite

Rivassa Two Column Radiators - Matt Anthracite 300mm Height

Width	Delta △T30 Watts	Delta △T30 BTU	Delta △T50 Watts	Delta △T50 BTU	Element Output	Element Type	Code	£ Ex VAT	£ Inc VAT
1148mm	322	1099	619	2111	450W	A, A+, C, E*, H	81.0021	473.00	**567.60**
1373mm	386	1317	743	2534	600W	A, A+, C, E*, H	81.0022	569.00	**682.80**

Rivassa Two Column Radiators - Matt Anthracite 600mm Height

Width	Delta △T30 Watts	Delta △T30 BTU	Delta △T50 Watts	Delta △T50 BTU	Element Output	Element Type	Code	£ Ex VAT	£ Inc VAT
428mm	218	744	420	1433	300W	A, A+, C, H	81.0046	217.00	**260.40**
473mm	242	826	467	1593	300W	A, A+, C, H	81.0047	240.00	**288.00**
518mm	266	908	514	1753	300W	A, A+, C, H	81.0048	259.00	**310.80**
563mm	290	989	560	1910	450W	A, A+, C, H	81.0049	288.00	**345.60**
608mm	314	1071	607	2070	450W	A, A+, C, H	81.0023	317.00	**380.40**
833mm	435	1484	841	2868	600W	A, A+, C, E*, H	81.0024	435.00	**522.00**
1010mm	532	1815	1027	3503	750W	A, A+, C, H	81.0090	535.00	**642.00**
1148mm	605	2064	1168	3983	900W	A, A+, H	81.0025	604.00	**724.80**
1460mm	774	2640	1494	5095	1200W	A, A+, H	81.0091	774.00	**928.80**

Rivassa Two Column Radiators - Matt Anthracite 1800mm Height

Width	Delta △T30 Watts	Delta △T30 BTU	Delta △T50 Watts	Delta △T50 BTU	Element Output	Element Type	Code	£ Ex VAT	£ Inc VAT
293mm	421	1436	826	2817	N/A	N/A	81.0018	284.00	**340.80**
383mm	561	1914	1101	3755	N/A	N/A	81.0019	370.00	**444.00**
473mm	702	2394	1377	4696	N/A	N/A	81.0020	466.00	**559.20**

*600w Type E Element can be fitted

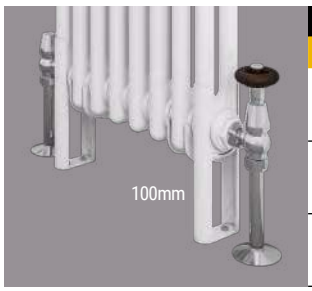

Rivassa Radiator Feet

Description	Code	£ Ex VAT	£ Inc VAT
Rivassa 2 Column Radiator Feet (pair) Gloss White	81.0034	37.00	**44.40**
Rivassa 2 Column Rad. Feet (pair) Matt Anthracite	81.0035	37.00	**44.40**
Rivassa 2 Column Rad. Feet (pair) Matt Black	81.0222	37.00	**44.40**

Matt Black

Rivassa Two Column Radiators - Matt Black 300mm Height

Width	Delta △T30 Watts	Delta △T30 BTU	Delta △T50 Watts	Delta △T50 BTU	Element Output	Element Type	Code	£ Ex VAT	£ Inc VAT
1148mm	322	1099	619	2111	450W	A, A+, C, E*, H	81.0208	473.00	**567.60**
1373mm	386	1317	743	2534	600W	A, A+, C, E*, H	81.0209	569.00	**682.80**

Rivassa Two Column Radiators - Matt Black 600mm Height

Width	Delta △T30 Watts	Delta △T30 BTU	Delta △T50 Watts	Delta △T50 BTU	Element Output	Element Type	Code	£ Ex VAT	£ Inc VAT
428mm	218	744	420	1433	300W	A, A+, C, H	81.0210	217.00	**260.40**
473mm	242	826	467	1593	300W	A, A+, C, H	81.0211	240.00	**288.00**
518mm	266	908	514	1753	300W	A, A+, C, H	81.0212	259.00	**310.80**
563mm	290	989	560	1910	450W	A, A+, C, H	81.0213	288.00	**345.60**
608mm	314	1071	607	2070	450W	A, A+, C, H	81.0214	317.00	**380.40**
833mm	435	1484	841	2868	600W	A, A+, C, E*, H	81.0215	435.00	**522.00**
1010mm	532	1815	1027	3503	750W	A, A+, C, H	81.0216	535.00	**642.00**
1148mm	605	2064	1168	3983	900W	A, A+, H	81.0217	604.00	**724.80**
1460mm	774	2640	1494	5095	1200W	A, A+, H	81.0218	774.00	**928.80**

Rivassa Two Column Radiators - Matt Black 1800mm Height

Width	Delta △T30 Watts	Delta △T30 BTU	Delta △T50 Watts	Delta △T50 BTU	Element Output	Element Type	Code	£ Ex VAT	£ Inc VAT
293mm	421	1436	826	2817	N/A	N/A	81.0219	284.00	**340.80**
383mm	561	1914	1101	3755	N/A	N/A	81.0220	370.00	**444.00**
473mm	702	2394	1377	4696	N/A	N/A	81.0221	466.00	**559.20**

*600w Type E Element can be fitted

TECHNICAL INFORMATION

All measurements in Height by Width. Radiators that are electric only are restricted to the heat output of the elements. Element size can be increased to full capacity of rail if using element type C, E or H. For element types see pages 324-337. For matching valves see pages 338-353. For indirect heating systems. Tappings are the width of the rail and 58mm off the wall. Prices include radiator and wall fixings sets, valves extra.

Pictured 81.0208 Matt Black with 81.0222 Feet

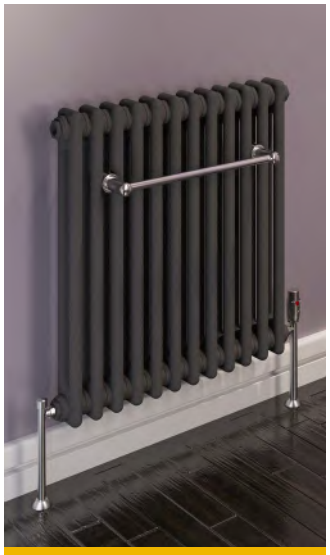

Pictured 81.0049 Matt Anthracite with 16.158 Towel Hanger

Rivassa Towel Hangers
Page 355

Rivassa Robe Hooks
Page 355

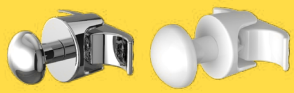

Round Vent Caps
Page 357

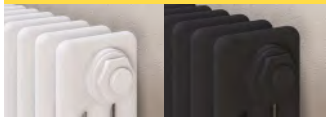

Traditional Range

RIVASSA 2 COLUMN

Bronze Effect

Bronze effect colour shown in images are subject to the limitations of the printing process and may appear different.

Pictured 81.0111 Bronze Effect with 81.0114 feet

Pictured 81.0109 Bronze Effect

Traditional Range

RIVASSA 2 COLUMN

Bronze Effect

Rivassa Two Column Radiators - Bronze Effect 600mm Height

Width	Delta △T30 Watts	Delta △T30 BTU	Delta △T50 Watts	Delta △T50 BTU	Element Output	Element Type	Code	£ Ex VAT	£ Inc VAT
608mm	314	1071	607	2070	450W	A, A+, C, H	81.0108	315.00	**378.00**
833mm	435	1484	841	2868	600W	A, A+, C, E*, H	81.0109	436.00	**523.20**
1010mm	532	1815	1027	3503	750W	A, A+, C, H	81.0110	535.00	**642.00**
1148mm	605	2064	1168	3983	900W	A, A+, H	81.0111	604.00	**724.80**

Rivassa Two Column Radiators - Bronze Effect 1800mm Height

Width	Delta △T30 Watts	Delta △T30 BTU	Delta △T50 Watts	Delta △T50 BTU	Element Output	Element Type	Code	£ Ex VAT	£ Inc VAT
383mm	561	1914	1101	3755	N/A	N/A	81.0113	375.00	**450.00**
473mm	702	2394	1377	4696	N/A	N/A	81.0112	466.00	**559.20**

*600w Type E Element can be fitted

A traditional radiator which will give a Victorian touch of authenticity to any room but will also create an elegant look to a contemporary interior. This radiator boasts high outputs to ensure the whole room is warm. Comes with the option of traditional legs and in bronze effect or chrome effect finishes. Also available in three columns.

FEATURES

- Tested to BS EN 442 standards
- 5 Year Manufacturer's Warranty*
- Matching colour wall fixing sets
- Radiator feet option available to get the classic look
- Material thickness 1.5mm
- Doesn't require flow diverter

* With conditions

Technical Tables & Drawings
Page 434-435

TECHNICAL INFORMATION

All measurements in Height by Width. Radiators that are electric only are restricted to the heat output of the elements. Element size can be increased to full capacity of rail if using element type C, E or H. For element types see pages 324-337. For matching valves see pages 338-353. For indirect heating systems. Tappings are the width of the rail and 58mm off the wall. Prices include radiator and wall fixings sets, valves extra.

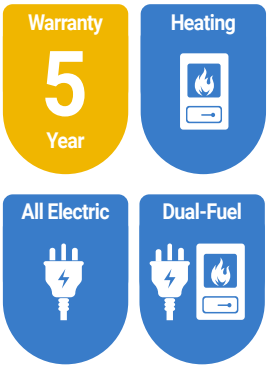

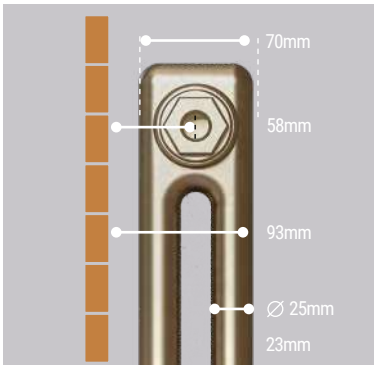

Pictured 81.0112 Bronze Effect

COMPLETE THE LOOK

Traditional Valves
Page 341&352

Angle TRV with Lockshield 15mm (pair) - Satin Nickel

Code	£ Ex VAT	£ Inc VAT
54.0009	97.00	**116.40**

RIVASSA 2 COLUMN RADIATOR FEET

Rivassa 2 Column Feet - Bronze Effect

Description	Code	£ Ex VAT	£ Inc VAT
2 Column Radiator Feet (pair)	81.0114	37.00	**44.40**

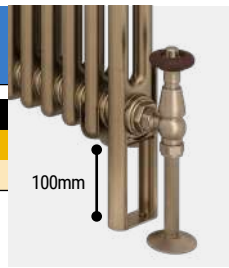

Rivassa Robe Hooks
Page 355

Rivassa Towel Hangers
Page 355

Traditional Range

RIVASSA 3 COLUMN

Pictured 81.0028 Matt Anthracite

Pictured 81.0033 Matt Anthracite with 81.0037 Feet

Traditional Valves
Page 341&352

Pictured 81.0016 Gloss White

A traditional radiator which will give a Victorian touch of authenticity to any room but will also create an elegant look to a contemporary interior. This radiator boasts high outputs to ensure the whole room is warm. Comes with the option of traditional legs and in gloss white, matt anthracite,matt black, bronze effect or chrome effect finishes. Also available in two and four columns.

FEATURES

- Tested to BS EN 442 standards
- 5 Year Manufacturer's Warranty*
- Matching colour wall fixing sets
- 300mm height option for limited spaces
- Radiator feet option available to get the classic look
- Material thickness 1.5mm
- Doesn't require flow diverter

* With conditions

Technical Tables & Drawings
Page 434-435

Warranty 5 Year

Heating

All Electric

Dual-Fuel

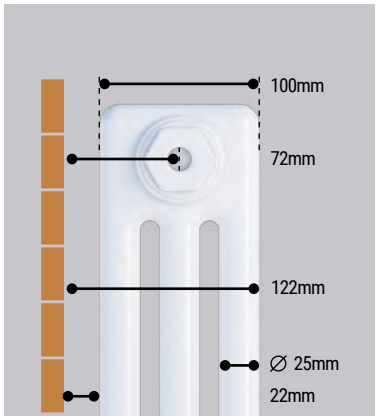

Traditional Range

RIVASSA 3 COLUMN

Gloss White

Rivassa Three Column Radiators - Gloss White 300mm Height

Width	Delta △T30 Watts	Delta △T30 BTU	Delta △T50 Watts	Delta △T50 BTU	Element Output	Element Type	Code	£ Ex VAT	£ Inc VAT
1148mm	404	1378	785	2677	600W	A, A+, C, E*, H	81.0013	496.00	**595.20**
1373mm	484	1651	942	3213	750W	A, A+, C, E*, H	81.0014	593.00	**711.60**

Rivassa Three Column Radiators - Gloss White 600mm Height

Width	Delta △T30 Watts	Delta △T30 BTU	Delta △T50 Watts	Delta △T50 BTU	Element Output	Element Type	Code	£ Ex VAT	£ Inc VAT
428mm	279	952	543	1852	450W	A, A+, C, H	81.0042	227.00	**272.40**
473mm	310	1058	604	2060	450W	A, A+, C, H	81.0043	250.00	**300.00**
518mm	341	1163	664	2265	450W	A, A+, C, H	81.0044	275.00	**330.00**
563mm	372	1269	724	2469	600W	A+, C, H	81.0045	299.00	**358.80**
608mm	403	1375	785	2677	600W	A+, C, H	81.0015	329.00	**394.80**
833mm	558	1903	1086	3704	900W	A+, C, H	81.0016	454.00	**544.80**
1010mm	682	2326	1328	4529	1000W	A, A+, C, H	81.0079	552.00	**662.40**
1148mm	776	2647	1509	5146	1200W	A, A+, H	81.0017	626.00	**751.20**
1460mm	993	3387	1931	6585	1200W	A, A+, H	81.0080	804.00	**964.80**

Rivassa Three Column Radiators - Gloss White 1800mm Height

Width	Delta △T30 Watts	Delta △T30 BTU	Delta △T50 Watts	Delta △T50 BTU	Element Output	Element Type	Code	£ Ex VAT	£ Inc VAT
293mm	528	1801	1030	3513	N/A	N/A	81.0010	305.00	**366.00**
383mm	705	2405	1374	4686	N/A	N/A	81.0011	380.00	**456.00**
473mm	881	3005	1717	5855	N/A	N/A	81.0012	473.00	**567.60**

*600w Type E Element can be fitted

Matt Anthracite

Rivassa Three Column Radiators - Matt Anthracite 300mm Height

Width	Delta △T30 Watts	Delta △T30 BTU	Delta △T50 Watts	Delta △T50 BTU	Element Output	Element Type	Code	£ Ex VAT	£ Inc VAT
1148mm	404	1378	785	2677	600W	A, A+, C, E*, H	81.0029	503.00	**603.60**
1373mm	484	1651	942	3213	750W	A, A+, C, E*, H	81.0030	604.00	**724.80**

Rivassa Three Column Radiators - Matt Anthracite 600mm Height

Width	Delta △T30 Watts	Delta △T30 BTU	Delta △T50 Watts	Delta △T50 BTU	Element Output	Element Type	Code	£ Ex VAT	£ Inc VAT
428mm	279	952	543	1852	450W	A, A+, C, H	81.0050	230.00	**276.00**
473mm	310	1058	604	2060	450W	A, A+, C, H	81.0051	255.00	**306.00**
518mm	341	1163	664	2265	450W	A, A+, C, H	81.0052	283.00	**339.60**
563mm	372	1269	724	2469	600W	A+, C, H	81.0053	304.00	**364.80**
608mm	403	1375	785	2677	600W	A+, C, H	81.0031	334.00	**400.80**
833mm	558	1903	1086	3704	900W	A+, C, H	81.0032	460.00	**552.00**
1010mm	682	2326	1328	4529	1000W	A, A+, C, H	81.0092	563.00	**675.60**
1148mm	776	2647	1509	5146	1200W	A, A+, H	81.0033	639.00	**766.80**
1460mm	993	3387	1931	6585	1200W	A, A+, H	81.0093	817.00	**980.40**

Rivassa Three Column Radiators - Matt Anthracite 1800mm Height

Width	Delta △T30 Watts	Delta △T30 BTU	Delta △T50 Watts	Delta △T50 BTU	Element Output	Element Type	Code	£ Ex VAT	£ Inc VAT
293mm	528	1801	1030	3513	N/A	N/A	81.0026	311.00	**373.20**
383mm	705	2405	1374	4686	N/A	N/A	81.0027	389.00	**466.80**
473mm	881	3005	1717	5855	N/A	N/A	81.0028	482.00	**578.40**

*600w Type E Element can be fitted

Matt Black

Rivassa Three Column Radiators - Matt Black 300mm Height

Width	Delta △T30 Watts	Delta △T30 BTU	Delta △T50 Watts	Delta △T50 BTU	Element Output	Element Type	Code	£ Ex VAT	£ Inc VAT
1148mm	404	1378	785	2677	600W	A, A+, C, E*, H	81.0223	503.00	**603.60**
1373mm	484	1651	942	3213	750W	A, A+, C, E*, H	81.0224	604.00	**724.80**

Rivassa Three Column Radiators - Matt Black 600mm Height

Width	Delta △T30 Watts	Delta △T30 BTU	Delta △T50 Watts	Delta △T50 BTU	Element Output	Element Type	Code	£ Ex VAT	£ Inc VAT
428mm	279	952	543	1852	450W	A, A+, C, H	81.0225	230.00	**276.00**
473mm	310	1058	604	2060	450W	A, A+, C, H	81.0226	255.00	**306.00**
518mm	341	1163	664	2265	450W	A, A+, C, H	81.0227	283.00	**339.60**
563mm	372	1269	724	2469	600W	A+, C, H	81.0228	304.00	**364.80**
608mm	403	1375	785	2677	600W	A+, C, H	81.0229	334.00	**400.80**
833mm	558	1903	1086	3704	900W	A+, C, H	81.0230	460.00	**552.00**
1010mm	682	2326	1328	4529	1000W	A, A+, C, H	81.0231	563.00	**675.60**
1148mm	776	2647	1509	5146	1200W	A, A+, H	81.0232	639.00	**766.80**
1460mm	993	3387	1931	6585	1200W	A, A+, H	81.0233	817.00	**980.40**

Rivassa Three Column Radiators - Matt Black 1800mm Height

Width	Delta △T30 Watts	Delta △T30 BTU	Delta △T50 Watts	Delta △T50 BTU	Element Output	Element Type	Code	£ Ex VAT	£ Inc VAT
293mm	528	1801	1030	3513	N/A	N/A	81.0234	311.00	**373.20**
383mm	705	2405	1374	4686	N/A	N/A	81.0235	389.00	**466.80**
473mm	881	3005	1717	5855	N/A	N/A	81.0236	482.00	**578.40**

*600w Type E Element can be fitted

TECHNICAL INFORMATION

All measurements in Height by Width. Radiators that are electric only are restricted to the heat output of the elements. Element size can be increased to full capacity of rail if using element type C, E or H. For element types see pages 324-337. For matching valves see pages 338-353. For indirect heating systems. Tappings are the width of the rail and 72mm off the wall. Prices include radiator and wall fixings sets, valves extra.

Pictured 81.0231 Matt Black with 81.0237 Feet

RIVASSA 3 COLUMN RADIATOR FEET

Rivassa Radiator Feet

Description	Code	£ Ex VAT	£ Inc VAT
Rivassa 3 Column Radiator Feet (pair)	81.0036	37.00	**44.40**
Rivassa 3 Column Radiator Feet (pair) Matt Anthracite	81.0037	37.00	**44.40**
Rivassa 3 Column Radiator Feet (pair) Matt Black	81.0237	37.00	**44.40**

Pictured 81.0042 Gloss White

Rivassa Towel Hangers
Page 355

Rivassa Robe Hooks
Page 355

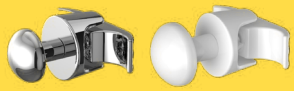

Round Vent Caps
Page 357

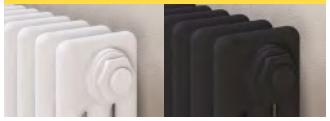

Traditional Range

RIVASSA 3 COLUMN

Bronze Effect

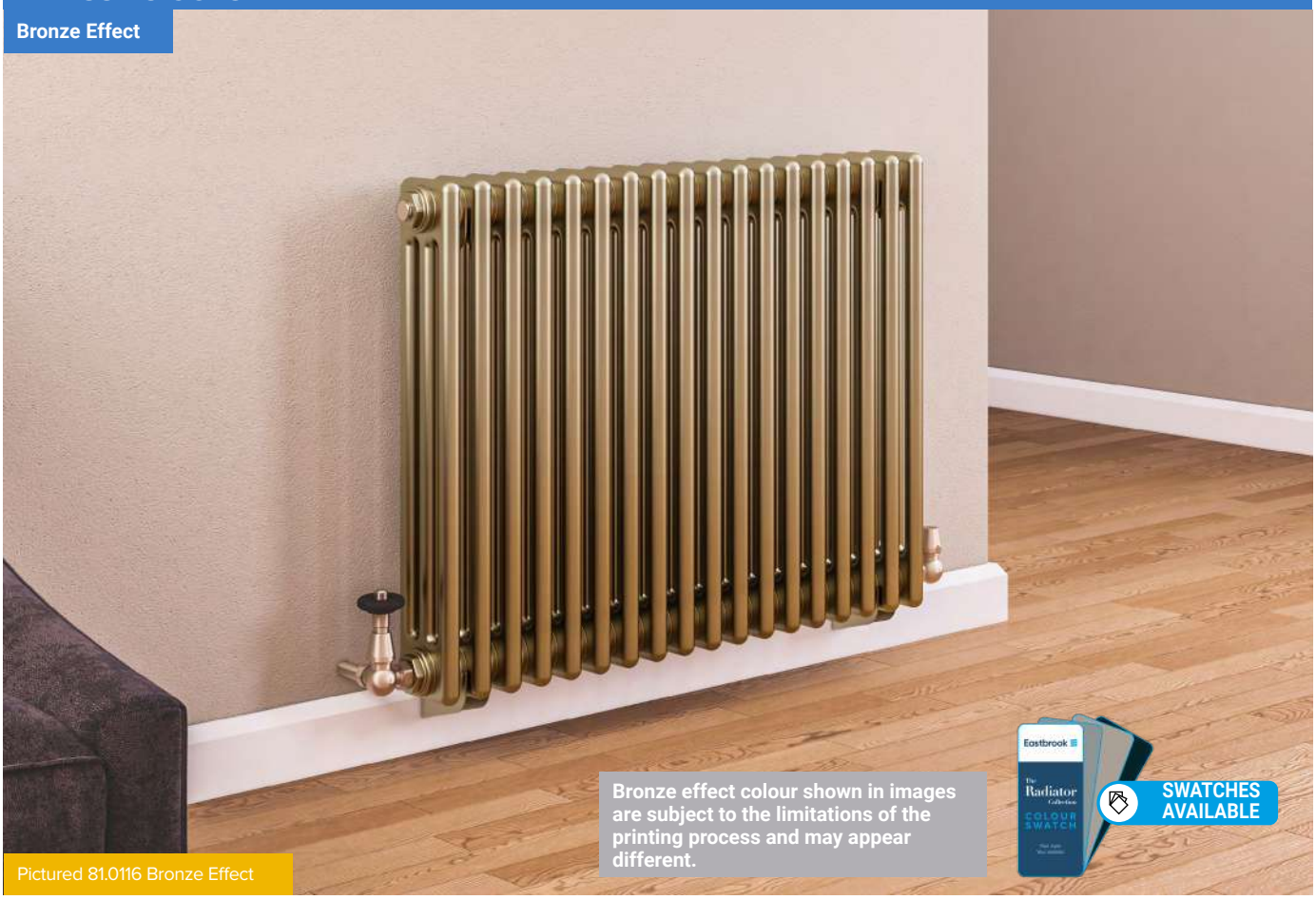

Bronze effect colour shown in images are subject to the limitations of the printing process and may appear different.

Pictured 81.0116 Bronze Effect

Pictured 81.0120 Bronze Effect

Traditional Range

RIVASSA 3 COLUMN

Bronze Effect

Rivassa Three Column Radiators - Bronze Effect 600mm Heigh

Width	Delta △T30 Watts	Delta △T30 BTU	Delta △T50 Watts	Delta △T50 BTU	Element Output	Element Type	Code	£ Ex VAT	£ Inc VAT
608mm	403	1375	785	2677	600W	A+, C, H	81.0115	334.00	**400.80**
833mm	558	1903	1086	3704	900W	A+, C, H	81.0116	460.00	**552.00**
1010mm	682	2326	1328	4529	1000W	A, A+, C, H	81.0117	563.00	**675.60**
1148mm	776	2647	1509	5146	1200W	A, A+, H	81.0118	640.00	**768.00**

Rivassa Three Column Radiators- Bronze Effect 1800mm Heigh

Width	Delta △T30 Watts	Delta △T30 BTU	Delta △T50 Watts	Delta △T50 BTU	Element Output	Element Type	Code	£ Ex VAT	£ Inc VAT
383mm	705	2405	1374	4686	N/A	N/A	81.0120	392.00	**470.40**
473mm	881	3005	1717	5855	N/A	N/A	81.0119	491.00	**589.20**

*600w Type E Element can be fitted

A traditional radiator which will give a Victorian touch of authenticity to any room but will also create an elegant look to a contemporary interior. This radiator boasts high outputs to ensure the whole room is warm. Comes with the option of traditional legs and in bronze effect or chrome effect finishes. Also available in two columns.

FEATURES

- Tested to BS EN 442 standards
- 5 Year Manufacturer's Warranty*
- Matching colour wall fixing sets
- Radiator feet option available to get the classic look
- Material thickness 1.5mm
- Doesn't require flow diverter

* With conditions

Technical Tables & Drawings
Page 434-435

TECHNICAL INFORMATION

All measurements in Height by Width. Radiators that are electric only are restricted to the heat output of the elements. Element size can be increased to full capacity of rail if using element type C, E or H. For element types see pages 324-337. For matching valves see pages 338-353. For indirect heating systems. Tappings are the width of the rail and 72mm off the wall. Prices include radiator and wall fixings sets, valves extra.

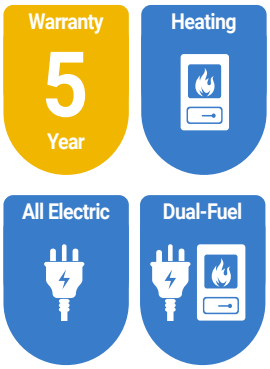

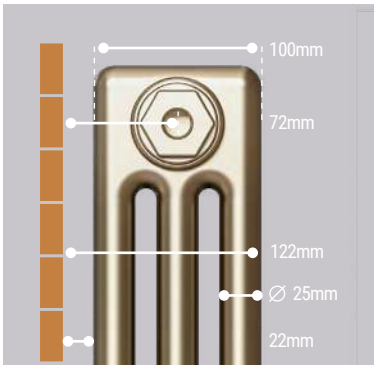

Pictured 81.0134 Bronze Effect

COMPLETE THE LOOK

Traditional Valves
Page 341&352

Angle TRV with Lockshield 15mm (pair) - Satin Nickel

Code	£ Ex VAT	£ Inc VAT
54.0009	97.00	**116.40**

RIVASSA 3 COLUMN RADIATOR FEET

Rivassa 3 Column Feet - Bronze Effect

Description	Code	£ Ex VAT	£ Inc VAT
3 Column Radiator Feet (pair)	81.0121	37.00	**44.40**

Rivassa Towel Hangers
Page 355

Rivassa Robe Hooks
Page 355

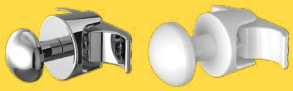

Traditional Range

RIVASSA 4 COLUMN

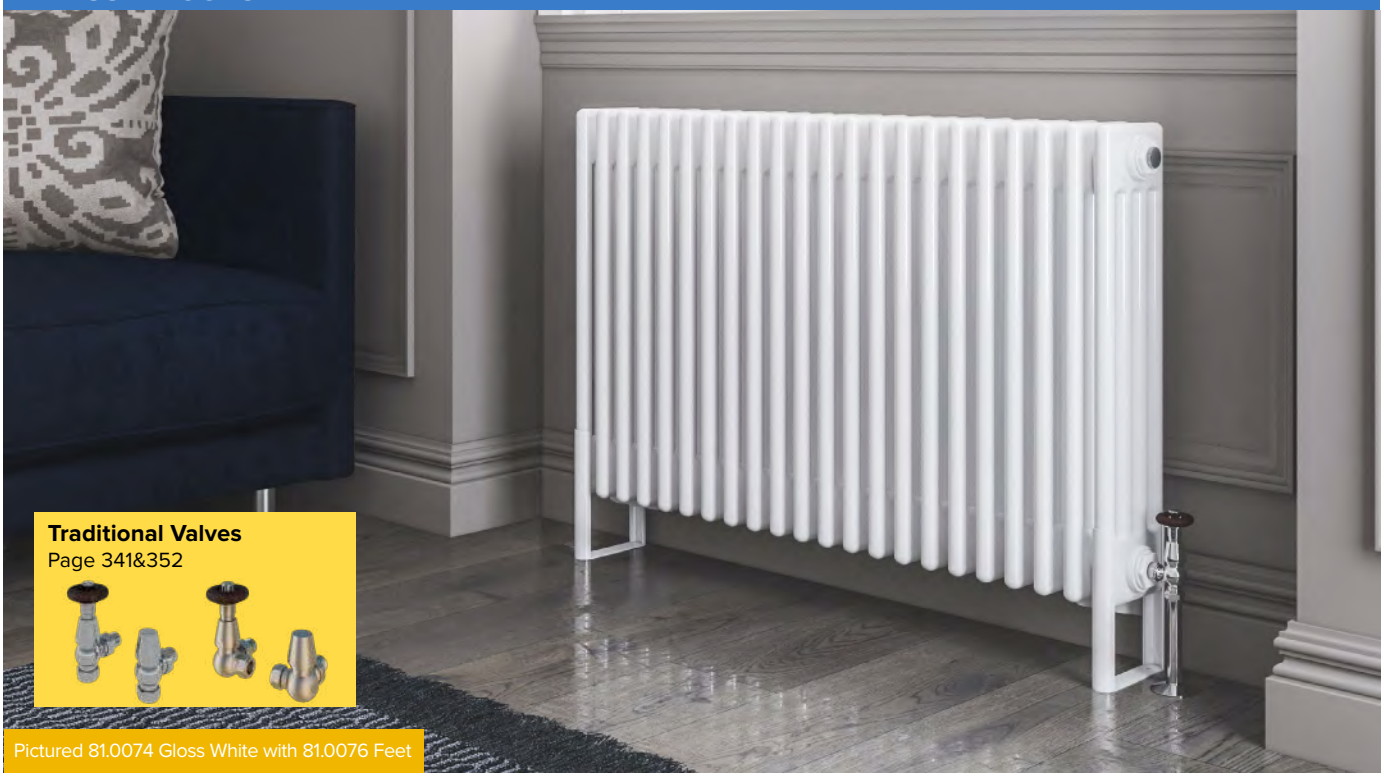

Traditional Valves
Page 341&352

Pictured 81.0074 Gloss White with 81.0076 Feet

Rivassa Towel Hangers
Page 355

Pictured 81.0088 Matt Anthracite

A traditional radiator which will give a Victorian touch of authenticity to any room but will also create an elegant look to a contemporary interior. This radiator boasts high outputs to ensure the whole room is warm. Comes with the option of traditional legs and in gloss white, matt anthracite or matt black finishes. Also available in two and three columns.

FEATURES
- Tested to BS EN 442 standards
- 5 Year Manufacturer's Warranty*
- Matching colour wall fixing sets
- 300mm height option for limited spaces
- Radiator feet option available to get the classic look
- Material thickness 1.5mm
- Doesn't require flow diverter

* With conditions

Warranty 5 Year | Heating | All Electric | Dual-Fuel

Technical Tables & Drawings
Page 434-435

Traditional Range

RIVASSA 4 COLUMN

Gloss White

Rivassa Four Column Radiators - Gloss White 300mm Height

Width	Delta △T30 Watts	Delta △T30 BTU	Delta △T50 Watts	Delta △T50 BTU	Element Output	Element Type	Code	£ Ex VAT	£ Inc VAT
1010mm	447	1525	876	2988	600W	A, A+, C, E*, H	81.0068	502.00	**602.40**
1373mm	610	2081	1195	4075	1000W	A, A+, H	81.0069	685.00	**822.00**
1505mm	671	2289	1315	4485	1000W	A+, H	81.0070	751.00	**901.20**

Rivassa Four Column Radiators - Gloss White 600mm Height

Width	Delta △T30 Watts	Delta △T30 BTU	Delta △T50 Watts	Delta △T50 BTU	Element Output	Element Type	Code	£ Ex VAT	£ Inc VAT
425mm	356	1214	697	2377	450W	A, A+	81.0071	301.00	**361.20**
605mm	515	1757	1007	3434	750W	A+, C, H	81.0072	432.00	**518.40**
785mm	673	2295	1316	4488	900W	A+, H	81.0073	563.00	**675.60**
1010mm	871	2971	1704	5811	1200W	A, A+	81.0074	726.00	**871.20**
1190mm	1029	3509	2013	6865	1200W	A, A+	81.0075	859.00	**1030.80**

*600w Type E Element can be fitted

Matt Anthracite

Rivassa Four Column Radiators - Matt Anthracite 300mm Height

Width	Delta △T30 Watts	Delta △T30 BTU	Delta △T50 Watts	Delta △T50 BTU	Element Output	Element Type	Code	£ Ex VAT	£ Inc VAT
1010mm	447	1525	876	2988	600W	A, A+, C, E*, H	81.0081	513.00	**615.60**
1373mm	610	2081	1195	4075	1000W	A, A+, H	81.0082	699.00	**838.80**
1505mm	671	2289	1315	4485	1000W	A+, H	81.0083	767.00	**920.40**

Rivassa Four Column Radiators - Matt Anthracite 600mm Height

Width	Delta △T30 Watts	Delta △T30 BTU	Delta △T50 Watts	Delta △T50 BTU	Element Output	Element Type	Code	£ Ex VAT	£ Inc VAT
425mm	356	1214	697	2377	450W	A, A+	81.0084	305.00	**366.00**
605mm	515	1757	1007	3434	750W	A+, C, H	81.0085	441.00	**529.20**
785mm	673	2295	1316	4488	900W	A+, H	81.0086	574.00	**688.80**
1010mm	871	2971	1704	5811	1200W	A, A+	81.0087	743.00	**891.60**
1190mm	1029	3509	2013	6865	1200W	A, A+	81.0088	874.00	**1048.80**

*600w Type E Element can be fitted

Matt Black

Rivassa Four Column Radiators - Matt Black 300mm Height

Width	Delta △T30 Watts	Delta △T30 BTU	Delta △T50 Watts	Delta △T50 BTU	Element Output	Element Type	Code	£ Ex VAT	£ Inc VAT
1010mm	447	1525	876	2988	600W	A, A+, C, E*, H	81.0238	513.00	**615.60**
1373mm	610	2081	1195	4075	1000W	A, A+, H	81.0239	699.00	**838.80**
1505mm	671	2289	1315	4485	1000W	A+, H	81.0240	767.00	**920.40**

Rivassa Four Column Radiators - Matt Black 600mm Height

Width	Delta △T30 Watts	Delta △T30 BTU	Delta △T50 Watts	Delta △T50 BTU	Element Output	Element Type	Code	£ Ex VAT	£ Inc VAT
425mm	356	1214	697	2377	450W	A, A+	81.0241	305.00	**366.00**
605mm	515	1757	1007	3434	750W	A+, C, H	81.0242	441.00	**529.20**
785mm	673	2295	1316	4488	900W	A+, H	81.0243	574.00	**688.80**
1010mm	871	2971	1704	5811	1200W	A, A+	81.0244	743.00	**891.60**
1190mm	1029	3509	2013	6865	1200W	A, A+	81.0245	874.00	**1048.80**

*600w Type E Element can be fitted

Pictured 81.0242 Matt Black

TECHNICAL INFORMATION

All measurements in Height by Width. Radiators that are electric only are restricted to the heat output of the elements. Element size can be increased to full capacity of rail if using element type C, E or H. For element types see pages 324-337. For matching valves see pages 338-353. For indirect heating systems. Tappings are the width of the rail and 85mm off the wall. Projection from wall 165mm. Prices include radiator and wall fixings sets, valves extra.

RIVASSA 4 COLUMN RADIATOR FEET

Description	Code	£ Ex VAT	£ Inc VAT
Rivassa 4 Column Radiator Feet (pair) - Gloss White	81.0076	45.00	**54.00**
Rivassa 4 Column Radiator Feet (pair) - Matt Anthracite	81.0089	45.00	**54.00**
Rivassa 4 Column Radiator Feet (pair) - Matt Black	81.0246	45.00	**54.00**

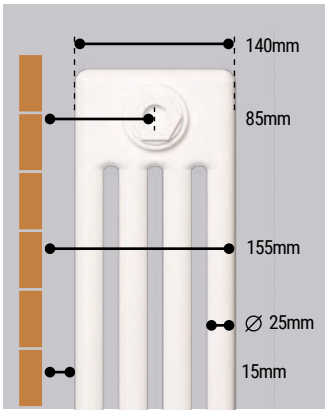

Round Vent Caps
Page 357

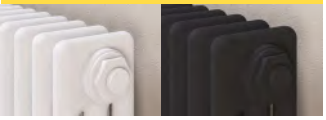

Rivassa Robe Hooks
Page 355

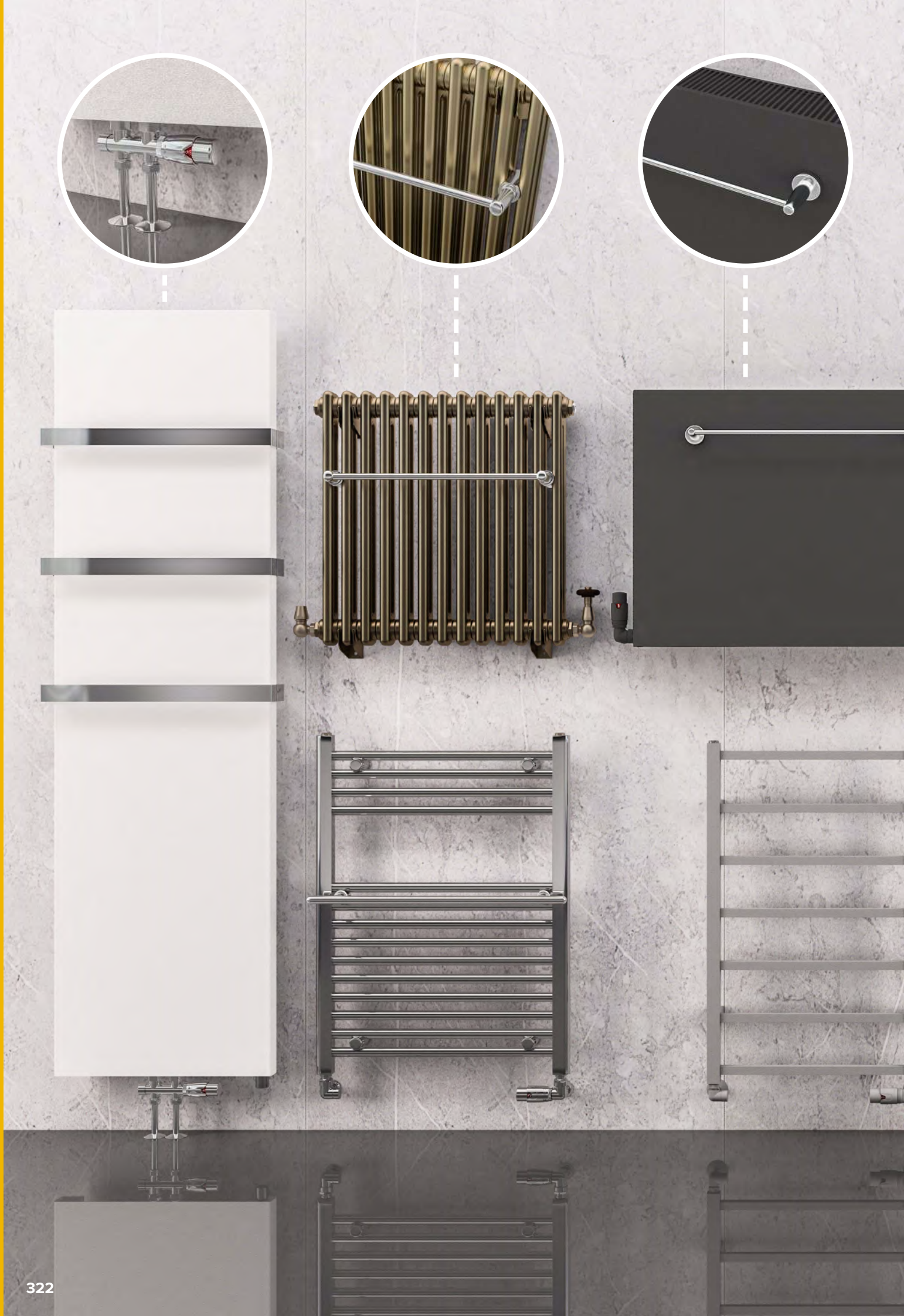

Accessories, Elements & Valves

A huge variety of elements and valves to allow easy control of your radiators heat output, whilst looking stylish.

Complete the look with coloured pipe shrouds and vent caps to match your radiator colour.

To add extra functionality, towel hangers & robe hooks make daily life easy when warming towels.

Elements - **NEW COLOUR**	324-337
Crafton Control Panels, T Pieces & Elbows	337
Darlington Thermostatic Radiator Valves	339-340
Twin Thermostatic Radiator Valves	340
Traditional Thermostatic Radiator Valves	341
Thermostatic Radiator Valves - **NEW COLOUR**	342-345
Manual Radiator Valves - **NEW COLOUR**	346-351
Traditional Manual Radiator Valves	352
Corner Dual Fuel Radiator Valves	353
Multi-Rail Towel Hangers, Towel Hangers & Robe Hooks	355-356
Pipe Shrouds & Collar Kits - **NEW COLOUR**	354-355
Vent Caps, Round & D Shape	357

• NEW COLOUR HERE •

Elements

Build up your 'All Electric' Towel Rail/Radiator

Please note that all fluid filled rails are special order, elements will be fitted RH Side and are non-returnable.

Step 1
Choose your towel rail/radiator (Please make sure that you can see the "All Electric / Dual Fuel" icon on the chosen towel rail/radiator page).

Step 2
Refer to the "Element Output" column for the required output to suit the chosen towel rail/radiator.

Step 3
Choose which element type best suits your need from the "Element Type" column. Please check that the IP Rating is suitable for the site circumstances.

Step 4
For "All Electric" installation please add Fluid Filling.

Build up your 'Dual Fuel' Towel Rail/Radiator

Repeat **Steps 1-3** as left. Please add your radiator valves and dual elbow where applicable.

Fluid filling is not required.

ELEMENT TYPE A+ ECO

Power	Length (mm)
100W	135
150W	170
300W	250
450W	350
600W	470
750W	590
900W	690
1000W	760
1200W	910

*(Not including appropriate element). I.P. rating 55. (Zone 2 and 3)
Please note all fluid filled rails are special order and are **non-returnable**.

FEATURES
- Elements use PTC self regulating technology providing excellent reliability and extended working life

TECHNICAL INFORMATION For an all electric towel rail/radiator, fluid filling must be purchased. Electric only elements will be fitted RH side unless otherwise specified. Cable colour white & length 1.5 metre. For dual fuel installations, purchase T piece separately. (Page 337)

Element Type A+ Eco — Item A Required

Description	Code	£ Ex VAT	£ Inc VAT
100W Type A+ Eco Element	41.0581	51.00	**61.20**
150W Type A+ Eco Element	41.0582	51.00	**61.20**
300W Type A+ Eco Element	41.0583	51.00	**61.20**
450W Type A+ Eco Element	41.0584	53.00	**63.60**
600W Type A+ Eco Element	41.0585	53.00	**63.60**
750W Type A+ Eco Element	41.0586	54.00	**64.80**
900W Type A+ Eco Element	41.0587	54.00	**64.80**
1000W Type A+ Eco Element	41.0588	54.00	**64.80**
1200W Type A+ Eco Element	41.0589	54.00	**64.80**
Fluid filling for above rail (electric only)*	FF	60.00	**72.00**

*All Type A+ Eco must be fitted with cover cap. (Below)

Element Type A+ Eco Cover Caps — Item B Required

Description	Code	£ Ex VAT	£ Inc VAT
Gloss White Cover Cap	41.0590	6.00	**7.20**
Black Cover Cap	41.0591	6.00	**7.20**
Chrome Cover Cap	41.0592	9.00	**10.80**
Grey Cover Cap	41.0593	9.00	**10.80**
Anthracite Cover Cap	41.0594	9.00	**10.80**
Cappuccino Cover Cap	41.0595	9.00	**10.80**
Brass Effect Cover Cap	41.0596	12.00	**14.40**
Bronze Effect Cover Cap	41.1221	12.00	**14.40**

Cover caps are made of plastic and do not have brush marks. (for effect colours)

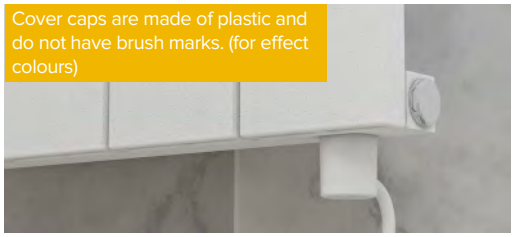

ELEMENT TYPE A+

Power	Length (mm)
100W	135
150W	170
300W	250
450W	350
600W	470
750W	590
900W	690
1000W	760
1200W	910

*(Not including appropriate element). I.P. rating 55. (Zone 2 and 3)
Please note all fluid filled rails are special order and are **non-returnable**.

FEATURES
- Elements use PTC self regulating technology providing excellent reliability and extended working life

TECHNICAL INFORMATION For an all electric towel rail/radiator, fluid filling must be purchased. Electric only elements will be fitted RH side unless otherwise specified. Cable colour white & length 1 metre. For dual fuel installations, purchase T piece separately. (Page 337)

Element Type A+ — Item A Required

Description	Code	£ Ex VAT	£ Inc VAT
100 watt element	8.016	65.00	**78.00**
150 watt element	8.017	65.00	**78.00**
300 watt element	8.018	68.00	**81.60**
450 watt element	8.019	73.00	**87.60**
600 watt element	8.020	95.00	**114.00**
750 watt element	8.021	98.00	**117.60**
900 watt element	8.022	102.00	**122.40**
1000 watt element	8.023	107.00	**128.40**
1200 watt element	8.024	110.00	**132.00**
Fluid filling for above rail (electric only)*	FF	60.00	**72.00**

*All Type A+ must be fitted with cover cap. (See below)

Element Type A+ Cover Caps — Item B Required

Description	Code	£ Ex VAT	£ Inc VAT
White Cap	8.025	8.00	**9.60**
Chrome Cap	8.026	12.00	**14.40**
Grey Cap	8.027	12.00	**14.40**
Cappuccino Cap	8.028	12.00	**14.40**
Anthracite Cap	8.029	12.00	**14.40**
Black Cap	8.030	12.00	**14.40**

Elements

ELEMENT TYPE A

Vertical & horizontal installation

Dual Fuel Installation

Power	Length (mm)
100W	220
150W	220
300W	300
600W	620
900W	920

Element Type A

Description	Code	£ Ex VAT	£ Inc VAT
100 watt element	8.009	67.00	**80.40**
150 watt element	8.004	67.00	**80.40**
300 watt element	8.001	70.00	**84.00**
600 watt element	8.002	98.00	**117.60**
900 watt element	8.003	121.00	**145.20**
Fluid filling for above rail (electric only)*	FF	60.00	**72.00**

*(Not including appropriate element). I.P. rating 55. (Zone 2 and 3)
Please note all fluid filled rails are special order and are **non-returnable**.

FEATURES
- Elements use PTC self regulating technology providing excellent reliability and extended working life

TECHNICAL INFORMATION For an all electric towel rail/radiator, fluid filling must be purchased. Electric only elements will be fitted RH side unless otherwise specified. Cable colour white & length 1.5 metre. For dual fuel installations, purchase T piece separately. (Page 337)

ELEMENT TYPE B WI-FI

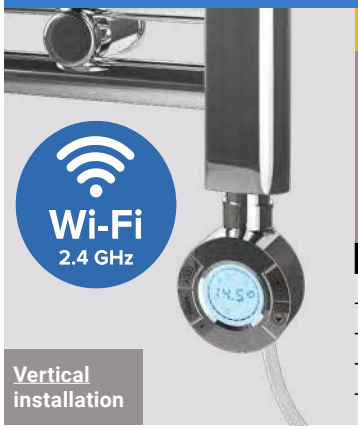

Vertical installation

Other Colours Available

Power	Length (mm)
100W	220
150W	220
300W	300
600W	620
900W	920

FEATURES
- Elements use PTC self regulating technology providing excellent reliability and extended working life
- Wi-Fi 2.4 Ghz & APP control (Smart Life APP for Android & IOS)
- Suitable for dual fuel or electric only installations
- Daily & Weekly programmable
- Child lock function
- Wide temperature range 30-70°C
- Low running costs, simple installation

TECHNICAL INFORMATION For an all electric towel rail/radiator, fluid filling must be purchased. Electric only elements will be fitted RH side unless otherwise specified. Cable colour white for Gloss White, Chrome & Brass Effect elements. Cable colour black for Matt Anthracite & Matt Black elements. Cable length 1.5 metre. For dual fuel installations, purchase T piece separately. (Page 337)

Element Type B Wi-Fi

Description	Colour	Code	£ Ex VAT	£ Inc VAT
150W Type B Element Wi-Fi	Gloss White	41.0733	142.00	**170.40**
300W Type B Element Wi-Fi	Gloss White	41.0734	145.00	**174.00**
600W Type B Element Wi-Fi	Gloss White	41.0735	151.00	**181.20**
900W Type B Element Wi-Fi	Gloss White	41.0736	156.00	**187.20**
150W Type B Element Wi-Fi	Matt Anthracite	41.0737	142.00	**170.40**
300W Type B Element Wi-Fi	Matt Anthracite	41.0738	145.00	**174.00**
600W Type B Element Wi-Fi	Matt Anthracite	41.0739	151.00	**181.20**
900W Type B Element Wi-Fi	Matt Anthracite	41.0740	156.00	**187.20**
150W Type B Element Wi-Fi	Matt Black	41.0741	142.00	**170.40**
300W Type B Element Wi-Fi	Matt Black	41.0742	145.00	**174.00**
600W Type B Element Wi-Fi	Matt Black	41.0743	151.00	**181.20**
900W Type B Element Wi-Fi	Matt Black	41.0744	156.00	**187.20**
150W Type B Element Wi-Fi	Chrome	41.0745	153.00	**183.60**
300W Type B Element Wi-Fi	Chrome	41.0746	156.00	**187.20**
600W Type B Element Wi-Fi	Chrome	41.0747	161.00	**193.20**
900W Type B Element Wi-Fi	Chrome	41.0748	166.00	**199.20**
150W Type B Element Wi-Fi	Brass Effect	41.0810	168.00	**201.60**
300W Type B Element Wi-Fi	Brass Effect	41.0811	172.00	**206.40**
600W Type B Element Wi-Fi	Brass Effect	41.0812	178.00	**213.60**
900W Type B Element Wi-Fi	Brass Effect	41.0813	183.00	**219.60**
Fluid filling for above rail (electric only)*	-	FF	60.00	**72.00**

*(not including appropriate element). I.P. rating X4. (Zone 2 and 3)
Please note all fluid filled rails are special order and are **non-returnable**.

ELEMENT TYPE C

WATER TEMPERATURE CONTROL

Including radiator temperature thermostat for horizontal installation and supplied with Chrome T-Piece

Power	Length (mm)
300W	340
600W	390
900W	440

Element Type C

Description	Code	£ Ex VAT	£ Inc VAT
Up to 300W element (inc rad stat) horizontal	8.300	187.00	**224.40**
300W to 600W element (inc rad stat) horizontal	8.301	197.00	**236.40**
600W to 900W element (inc rad stat) horizontal	8.302	202.00	**242.40**
Fluid filling for above rail (electric only)*	FF	60.00	**72.00**
Extension piece for type c element**	8.903	20.00	**24.00**

*(not including appropriate element). I.P. rating 54. (Zone 2 and 3).
Please note all fluid filled rails are special order and are **non-returnable**.
**Some traditional rails may require an extension piece for a type C element.

FEATURES
- Water temperature controlled Thermostat
- Towel drying
- Low running costs
- Simple installation
- Wide temperature range 10-60°C

TECHNICAL INFORMATION For an all electric towel rail/radiator, fluid filling must be purchased. Electric only elements will be fitted RH side unless otherwise specified. Cable colour white & length 1.2 metre.
Only suitable with Chrome T-Piece - 8.901

Elements

ELEMENT TYPE D — WATER TEMPERATURE CONTROL

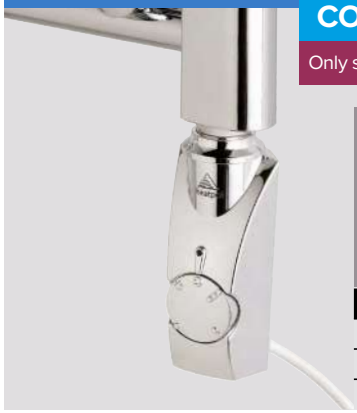

Only suitable with Chrome T-Piece - 8.901

Including radiator temperature thermostat for vertical installation and Chrome T-Piece

Power	Length
300W	340
600W	390
900W	440

Element Type D

Description	Code	£ Ex VAT	£ Inc VAT
Up to 300W element (inc rad stat) vertical	8.310	157.00	**188.40**
Up to 600W element (inc rad stat) vertical	8.311	165.00	**198.00**
Up to 900W element (inc rad stat) vertical	8.312	168.00	**201.60**
Fluid filling for above rail (electric only)*	FF	60.00	**72.00**

*(not including appropriate element). I.P. rating 54. (Zone 2 and 3)
Please note all fluid filled rails are special order and are **non-returnable**.

FEATURES
- Off season heating
- Water temperature controlled Thermostat
- Low running costs
- Simple installation
- Wide temperature range 10-60°C

TECHNICAL INFORMATION For an all electric towel rail/radiator, fluid filling must be purchased. Electric only elements will be fitted RH side unless otherwise specified. Cable colour white & length 0.9 metre. **Only suitable with Chrome T-Piece - 8.901**

ELEMENT TYPE D WITH BOOST — WATER TEMPERATURE CONTROL

Chrome

Turbo Boost Function

Including radiator temperature thermostat for vertical installation and T-Piece*

*Chrome, Matt Anthracite & Matt Black elements come with Chrome T-Piece.
*Gloss White & Matt White elements both come with white T-Piece.

Power	Length
300W	340
600W	390
900W	440

Gloss White

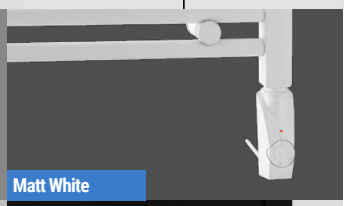

Matt White

Matt Anthracite

Matt Black

Element Type D With Boost

Description	Colour	Code	£ Ex VAT	£ Inc VAT
300W Type D Element with Boost	Chrome	8.320	161.00	**193.20**
600W Type D Element with Boost	Chrome	8.321	168.00	**201.60**
900W Type D Element with Boost	Chrome	8.322	174.00	**208.80**
300W Type D Element with Boost	Gloss White	8.323	161.00	**193.20**
600W Type D Element with Boost	Gloss White	8.324	168.00	**201.60**
900W Type D Element with Boost	Gloss White	8.325	174.00	**208.80**
300W Type D Element with Boost	Matt White	8.326	179.00	**214.80**
600W Type D Element with Boost	Matt White	8.327	187.00	**224.40**
900W Type D Element with Boost	Matt White	8.328	192.00	**230.40**
300W Type D Element with Boost	Matt Anthracite	8.329	179.00	**214.80**
600W Type D Element with Boost	Matt Anthracite	8.330	187.00	**224.40**
900W Type D Element with Boost	Matt Anthracite	8.331	192.00	**230.40**
300W Type D Element with Boost	Matt Black	8.332	179.00	**214.80**
600W Type D Element with Boost	Matt Black	8.333	187.00	**224.40**
900W Type D Element with Boost	Matt Black	8.334	192.00	**230.40**
Fluid filling for above rail (electric only)*	-	FF	60.00	**72.00**

*(not including appropriate element). I.P. rating 54. (Zone 2 and 3)
Please note all fluid filled rails are special order and are **non-returnable**.

FEATURES
- Turbo boost function (full heating - 1, 2 or 3 hours settings)
- Anti-Freeze function
- Water temperature controlled Thermostat
- Smooth temperature adjustment (10°C to 65°C)
- Low running costs
- Simple installation

TECHNICAL INFORMATION For an all electric towel rail/radiator, fluid filling must be purchased. Electric only elements will be fitted RH side unless otherwise specified. Cable colour white & length 0.9 metre. **Only suitable with supplied T-Piece**

ELEMENT TYPE E — WATER TEMPERATURE CONTROL

Only suitable with Chrome T-Piece - 8.901

Including radiator temperature thermostat for vertical & horizontal installation

Power	Length (mm)
150W	370
300W	390
600W	750

FEATURES
- Off season heating
- Water temperature controlled Thermostat, with low running costs
- Simple installation
- Wide temperature range 10-60°C
- For vertical and horizontal installation

Element Type E

Description	Code	£ Ex VAT	£ Inc VAT
150w Type E Element White	8.034	151.00	**181.20**
300w Type E Element White	8.035	156.00	**187.20**
600w Type E Element White	8.036	165.00	**198.00**
150w Type E Element Anthracite	8.037	156.00	**187.20**
300w Type E Element Anthracite	8.038	160.00	**192.00**
600w Type E Element Anthracite	8.039	177.00	**212.40**
150w Type E Element Black	8.040	156.00	**187.20**
300w Type E Element Black	8.041	160.00	**192.00**
600w Type E Element Black	8.042	177.00	**212.40**
150w Type E Element Chrome	8.031	161.00	**193.20**
300w Type E Element Chrome	8.032	168.00	**201.60**
600w Type E Element Chrome	8.033	188.00	**225.60**
Fluid filling for above rail (electric only)*	FF	60.00	**72.00**

*(Not including appropriate element). I.P. rating X4. (Zone 2 and 3)
Please note all fluid filled rails are special order and are **non-returnable**.

TECHNICAL INFORMATION For an all electric towel rail/radiator, fluid filling must be purchased. Electric only elements will be fitted RH side unless otherwise specified. **Only suitable with Chrome T-Piece - 8.901**

Elements

Element Type F With D Shape Cap - Chrome				
Description	Colour	Code	£ Ex VAT	£ Inc VAT
150W Type F Element with D Shape Cap	Chrome	8.335	201.00	**241.20**
300W Type F Element with D Shape Cap	Chrome	8.315	206.00	**247.20**
600W Type F Element with D Shape Cap	Chrome	8.316	216.00	**259.20**
900W Type F Element with D Shape Cap	Chrome	8.336	222.00	**266.40**
1200W Type F Element with D Shape Cap	Chrome	8.337	226.00	**271.20**
Spare Remote Controller for Type F Element		8.319	67.00	**80.40**
Fluid filling for above rail (electric only)*	-	FF	60.00	**72.00**

*(not including appropriate element). I.P. rating 54. (Zone 2 and 3)
Please note all fluid filled rails are special order and are **non-returnable**.

FEATURES

- Comes with remote control, that acts as ambient temperature sensor.
- Turbo boost function (1-3 hours)
- Off season heating
- Cable connection cover included
- Daily & weekly programmable (only on Ambient Mode available)
- Low running costs, towel drying
- Smooth temperature adjustment (10°C to 65°C)
- Thermostat can control either water temperature or ambient room temperature
- Open window detection
- Eco Design ready
- Anti-Freeze function

TECHNICAL INFORMATION

For an all electric towel rail/radiator, fluid filling must be purchased. Electric only elements will be fitted RH side unless otherwise specified. Cable colour white & length 1.2 metre. **Only suitable with Chrome T-Piece - 8.901. Not suitable with Dual Fuel Valves.**

ELEMENT TYPE F D SHAPE CAP

WATER OR ROOM TEMPERATURE CONTROL

Only suitable with Chrome T-Piece - 8.901

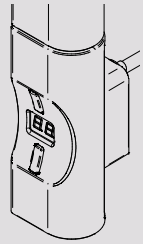

Includes remote control.

Chrome

Power	Length (mm)
150W	300
300W	340
600W	390
900W	440
1200W	470

Turbo Boost Function

For vertical installation only. Digital temp control element including remote control.

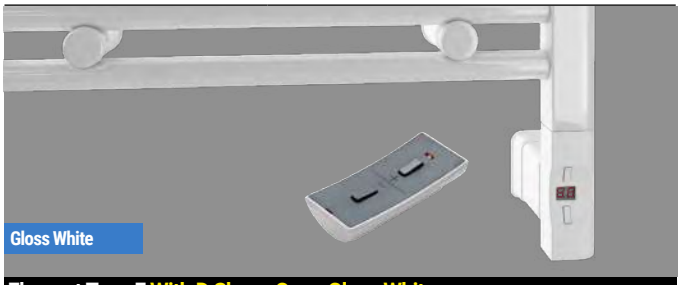

Gloss White

Element Type F With D Shape Cap - Gloss White				
Description	Colour	Code	£ Ex VAT	£ Inc VAT
150W Type F Element with D Shape Cap	Gloss White	8.338	185.00	**222.00**
300W Type F Element with D Shape Cap	Gloss White	8.313	191.00	**229.20**
600W Type F Element with D Shape Cap	Gloss White	8.314	201.00	**241.20**
900W Type F Element with D Shape Cap	Gloss White	8.339	206.00	**247.20**
1200W Type F Element with D Shape Cap	Gloss White	8.340	212.00	**254.40**
Spare Remote Controller for Type F Element		8.319	67.00	**80.40**
Fluid filling for above rail (electric only)*	-	FF	60.00	**72.00**

*(not including appropriate element). I.P. rating 54. (Zone 2 and 3)
Please note all fluid filled rails are special order and are **non-returnable**.

Matt White

Element Type F With D Shape Cap - Matt White				
Description	Colour	Code	£ Ex VAT	£ Inc VAT
150W Type F Element with D Shape Cap	Matt White	8.341	212.00	**254.40**
300W Type F Element with D Shape Cap	Matt White	8.342	216.00	**259.20**
600W Type F Element with D Shape Cap	Matt White	8.343	226.00	**271.20**
900W Type F Element with D Shape Cap	Matt White	8.344	230.00	**276.00**
1200W Type F Element with D Shape Cap	Matt White	8.345	236.00	**283.20**
Spare Remote Controller for Type F Element		8.319	67.00	**80.40**
Fluid filling for above rail (electric only)*	-	FF	60.00	**72.00**

*(not including appropriate element). I.P. rating 54. (Zone 2 and 3)
Please note all fluid filled rails are special order and are **non-returnable**.

Matt Anthracite

Element Type F With D Shape Cap - Matt Anthracite				
Description	Colour	Code	£ Ex VAT	£ Inc VAT
150W Type F Element with D Shape Cap	Matt Anthracite	8.346	212.00	**254.40**
300W Type F Element with D Shape Cap	Matt Anthracite	8.317	216.00	**259.20**
600W Type F Element with D Shape Cap	Matt Anthracite	8.318	226.00	**271.20**
900W Type F Element with D Shape Cap	Matt Anthracite	8.347	230.00	**276.00**
1200W Type F Element with D Shape Cap	Matt Anthracite	8.348	236.00	**283.20**
Spare Remote Controller for Type F Element		8.319	67.00	**80.40**
Fluid filling for above rail (electric only)*	-	FF	60.00	**72.00**

*(not including appropriate element). I.P. rating 54. (Zone 2 and 3)
Please note all fluid filled rails are special order and are **non-returnable**.

Matt Black

Element Type F With D Shape Cap - Matt Black				
Description	Colour	Code	£ Ex VAT	£ Inc VAT
150W Type F Element with D Shape Cap	Matt Black	8.349	212.00	**254.40**
300W Type F Element with D Shape Cap	Matt Black	8.350	216.00	**259.20**
600W Type F Element with D Shape Cap	Matt Black	8.351	226.00	**271.20**
900W Type F Element with D Shape Cap	Matt Black	8.352	230.00	**276.00**
1200W Type F Element with D Shape Cap	Matt Black	8.353	236.00	**283.20**
Spare Remote Controller for Type F Element		8.319	67.00	**80.40**
Fluid filling for above rail (electric only)*	-	FF	60.00	**72.00**

*(not including appropriate element). I.P. rating 54. (Zone 2 and 3)
Please note all fluid filled rails are special order and are **non-returnable**.

Elements

WATER OR ROOM TEMPERATURE CONTROL

ECODESIGN READY

ELEMENT TYPE F ROUND CAP

Only suitable with Chrome T-Piece - 8.901

Chrome

Power	Length (mm)
150W	300
300W	340
600W	390
900W	440
1200W	470

Turbo Boost Function

For vertical installation only. Digital temp control element including remote control.

Element Type F With Round Cap - Chrome

Description	Colour	Code	£ Ex VAT	£ Inc VAT
150W Type F Element with Round Cap	Chrome	8.354	201.00	**241.20**
300W Type F Element with Round Cap	Chrome	8.355	206.00	**247.20**
600W Type F Element with Round Cap	Chrome	8.356	216.00	**259.20**
900W Type F Element with Round Cap	Chrome	8.357	222.00	**266.40**
1200W Type F Element with Round Cap	Chrome	8.358	226.00	**271.20**
Spare Remote Controller for Type F Element		8.319	67.00	**80.40**
Fluid filling for above rail (electric only)*	-	FF	60.00	**72.00**

*(not including appropriate element). I.P. rating 54. (Zone 2 and 3)
Please note all fluid filled rails are special order and are **non-returnable**.

FEATURES

- Comes with remote control, that acts as ambient temperature sensor.
- Turbo boost function (1-3 hours)
- Off season heating
- Cable connection cover included
- Daily & weekly programmable (only on Ambient Mode available)
- Low running costs, towel drying
- Smooth temperature adjustment (10°C to 65°C)
- Thermostat can control either water temperature or ambient room temperature
- Open window detection
- Eco Design ready
- Anti-Freeze function

TECHNICAL INFORMATION

For an all electric towel rail/radiator, fluid filling must be purchased. Electric only elements will be fitted RH side unless otherwise specified. Cable colour white & length 1.2 metre. **Only suitable with Chrome T-Piece - 8.901. Not suitable with Dual Fuel Valves.**

Gloss White

Element Type F With Round Cap - Gloss White

Description	Colour	Code	£ Ex VAT	£ Inc VAT
150W Type F Element with Round Cap	Gloss White	8.359	185.00	**222.00**
300W Type F Element with Round Cap	Gloss White	8.360	191.00	**229.20**
600W Type F Element with Round Cap	Gloss White	8.361	201.00	**241.20**
900W Type F Element with Round Cap	Gloss White	8.362	206.00	**247.20**
1200W Type F Element with Round Cap	Gloss White	8.363	212.00	**254.40**
Spare Remote Controller for Type F Element		8.319	67.00	**80.40**
Fluid filling for above rail (electric only)*	-	FF	60.00	**72.00**

*(not including appropriate element). I.P. rating 54. (Zone 2 and 3)
Please note all fluid filled rails are special order and are **non-returnable**.

Matt White

Element Type F With Round Cap - Matt White

Description	Colour	Code	£ Ex VAT	£ Inc VAT
150W Type F Element with Round Cap	Matt White	8.364	212.00	**254.40**
300W Type F Element with Round Cap	Matt White	8.365	216.00	**259.20**
600W Type F Element with Round Cap	Matt White	8.366	226.00	**271.20**
900W Type F Element with Round Cap	Matt White	8.367	230.00	**276.00**
1200W Type F Element with Round Cap	Matt White	8.368	236.00	**283.20**
Spare Remote Controller for Type F Element		8.319	67.00	**80.40**
Fluid filling for above rail (electric only)*	-	FF	60.00	**72.00**

*(not including appropriate element). I.P. rating 54. (Zone 2 and 3)
Please note all fluid filled rails are special order and are **non-returnable**.

Matt Anthracite

Element Type F With Round Cap - Matt Anthracite

Description	Colour	Code	£ Ex VAT	£ Inc VAT
150W Type F Element with Round Cap	Matt Anthracite	8.369	212.00	**254.40**
300W Type F Element with Round Cap	Matt Anthracite	8.370	216.00	**259.20**
600W Type F Element with Round Cap	Matt Anthracite	8.371	226.00	**271.20**
900W Type F Element with Round Cap	Matt Anthracite	8.372	230.00	**276.00**
1200W Type F Element with Round Cap	Matt Anthracite	8.373	236.00	**283.20**
Spare Remote Controller for Type F Element		8.319	67.00	**80.40**
Fluid filling for above rail (electric only)*	-	FF	60.00	**72.00**

*(not including appropriate element). I.P. rating 54. (Zone 2 and 3)
Please note all fluid filled rails are special order and are **non-returnable**.

Matt Black

Element Type F With Round Cap - Matt Black

Description	Colour	Code	£ Ex VAT	£ Inc VAT
150W Type F Element with Round Cap	Matt Black	8.374	212.00	**254.40**
300W Type F Element with Round Cap	Matt Black	8.375	216.00	**259.20**
600W Type F Element with Round Cap	Matt Black	8.376	226.00	**271.20**
900W Type F Element with Round Cap	Matt Black	8.377	230.00	**276.00**
1200W Type F Element with Round Cap	Matt Black	8.378	236.00	**283.20**
Spare Remote Controller for Type F Element		8.319	67.00	**80.40**
Fluid filling for above rail (electric only)*	-	FF	60.00	**72.00**

*(not including appropriate element). I.P. rating 54. (Zone 2 and 3)
Please note all fluid filled rails are special order and are **non-returnable**.

Elements

Element Type F With Square Cap - Chrome

Description	Colour	Code	£ Ex VAT	£ Inc VAT
150W Type F Element with Square Cap	Chrome	8.379	201.00	**241.20**
300W Type F Element with Square Cap	Chrome	8.380	206.00	**247.20**
600W Type F Element with Square Cap	Chrome	8.381	216.00	**259.20**
900W Type F Element with Square Cap	Chrome	8.382	222.00	**266.40**
1200W Type F Element with Square Cap	Chrome	8.383	226.00	**271.20**
Spare Remote Controller for Type F Element		8.319	67.00	**80.40**
Fluid filling for above rail (electric only)*	-	FF	60.00	**72.00**

*(not including appropriate element). I.P. rating 54. (Zone 2 and 3)
Please note all fluid filled rails are special order and are **non-returnable**.

FEATURES

- Comes with remote control, that acts as ambient temperature sensor.
- Turbo boost function (1-3 hours)
- Off season heating
- Cable connection cover included
- Daily & weekly programmable (only on Ambient Mode available)
- Low running costs, towel drying
- Smooth temperature adjustment (10°C to 65°C)
- Thermostat can control either water temperature or ambient room temperature
- Open window detection
- Eco Design ready
- Anti-Freeze function

TECHNICAL INFORMATION

For an all electric towel rail/radiator, fluid filling must be purchased. Electric only elements will be fitted RH side unless otherwise specified. Cable colour white & length 1.2 metre. **Only suitable with Chrome T-Piece - 8.901. Not suitable with Dual Fuel Valves.**

ELEMENT TYPE F SQUARE CAP

ECODESIGN READY

WATER OR ROOM TEMPERATURE CONTROL

Only suitable with Chrome T-Piece - 8.901

Chrome

Power	Length (mm)
150W	300
300W	340
600W	390
900W	440
1200W	470

Turbo Boost Function

For vertical installation only. Digital temp control element including remote control.

Gloss White

Element Type F With Square Cap - Gloss White

Description	Colour	Code	£ Ex VAT	£ Inc VAT
150W Type F Element with Square Cap	Gloss White	8.384	185.00	**222.00**
300W Type F Element with Square Cap	Gloss White	8.385	191.00	**229.20**
600W Type F Element with Square Cap	Gloss White	8.386	201.00	**241.20**
900W Type F Element with Square Cap	Gloss White	8.387	206.00	**247.20**
1200W Type F Element with Square Cap	Gloss White	8.388	212.00	**254.40**
Spare Remote Controller for Type F Element		8.319	67.00	**80.40**
Fluid filling for above rail (electric only)*	-	FF	60.00	**72.00**

*(not including appropriate element). I.P. rating 54. (Zone 2 and 3)
Please note all fluid filled rails are special order and are **non-returnable**.

Matt White

Element Type F With Square Cap - Matt White

Description	Colour	Code	£ Ex VAT	£ Inc VAT
150W Type F Element with Square Cap	Matt White	8.389	212.00	**254.40**
300W Type F Element with Square Cap	Matt White	8.390	216.00	**259.20**
600W Type F Element with Square Cap	Matt White	8.391	226.00	**271.20**
900W Type F Element with Square Cap	Matt White	8.392	230.00	**276.00**
1200W Type F Element with Square Cap	Matt White	8.393	236.00	**283.20**
Spare Remote Controller for Type F Element		8.319	67.00	**80.40**
Fluid filling for above rail (electric only)*	-	FF	60.00	**72.00**

*(not including appropriate element). I.P. rating 54. (Zone 2 and 3)
Please note all fluid filled rails are special order and are **non-returnable**.

Matt Anthracite

Element Type F With Square Cap - Matt Anthracite

Description	Colour	Code	£ Ex VAT	£ Inc VAT
150W Type F Element with Square Cap	Matt Anthracite	8.394	212.00	**254.40**
300W Type F Element with Square Cap	Matt Anthracite	8.395	216.00	**259.20**
600W Type F Element with Square Cap	Matt Anthracite	8.396	226.00	**271.20**
900W Type F Element with Square Cap	Matt Anthracite	8.397	230.00	**276.00**
1200W Type F Element with Square Cap	Matt Anthracite	8.398	236.00	**283.20**
Spare Remote Controller for Type F Element		8.319	67.00	**80.40**
Fluid filling for above rail (electric only)*	-	FF	60.00	**72.00**

*(not including appropriate element). I.P. rating 54. (Zone 2 and 3)
Please note all fluid filled rails are special order and are **non-returnable**.

Matt Black

Element Type F With Square Cap - Matt Black

Description	Colour	Code	£ Ex VAT	£ Inc VAT
150W Type F Element with Square Cap	Matt Black	8.399	212.00	**254.40**
300W Type F Element with Square Cap	Matt Black	8.400	216.00	**259.20**
600W Type F Element with Square Cap	Matt Black	8.401	226.00	**271.20**
900W Type F Element with Square Cap	Matt Black	8.402	230.00	**276.00**
1200W Type F Element with Square Cap	Matt Black	8.403	236.00	**283.20**
Spare Remote Controller for Type F Element		8.319	67.00	**80.40**
Fluid filling for above rail (electric only)*	-	FF	60.00	**72.00**

*(not including appropriate element). I.P. rating 54. (Zone 2 and 3)
Please note all fluid filled rails are special order and are **non-returnable**.

Elements

WATER OR ROOM TEMPERATURE CONTROL

ELEMENT TYPE F WI-FI D SHAPE CAP

Only suitable with Chrome T-Piece - 8.901

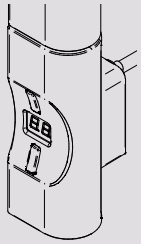

Wi-Fi 2.4 GHz

Includes remote control.

Chrome

Power	Length (mm)
150W	300
300W	340
600W	390
900W	440
1200W	470

Turbo Boost Function

For vertical installation only. Digital temp control element including remote control.

Element Type F WiFi With D Shape Cap - Chrome

Description	Colour	Code	£ Ex VAT	£ Inc VAT
150W Type F Element Wi-Fi with D Shape Cap	Chrome	8.479	296.00	**355.20**
300W Type F Element Wi-Fi with D Shape Cap	Chrome	8.480	302.00	**362.40**
600W Type F Element Wi-Fi with D Shape Cap	Chrome	8.481	306.00	**367.20**
900W Type F Element Wi-Fi with D Shape Cap	Chrome	8.482	310.00	**372.00**
1200W Type F Element Wi-Fi with D Shape Cap	Chrome	8.483	317.00	**380.40**
Spare Remote Controller for Type F Element		8.319	67.00	**80.40**
Fluid filling for above rail (electric only)*	-	FF	60.00	**72.00**

*(not including appropriate element). I.P. rating 54. (Zone 2 and 3)
Please note all fluid filled rails are special order and are **non-returnable**.

FEATURES

- Wi-Fi & App Control
- Comes with remote control, that acts as ambient temperature sensor
- Turbo boost function (1-3 hours)
- Off season heating
- Cable connection cover included
- Anti-Freeze function
- Daily & weekly programmable (only on Ambient Mode available)
- Low running costs, towel drying
- Smooth temperature adjustment (10°C - 65°C)
- Thermostat can control either water temperature or ambient room temperature
- Open window detection
- Eco Design ready

TECHNICAL INFORMATION

For an all electric towel rail/radiator, fluid filling must be purchased. Electric only elements will be fitted RH side unless otherwise specified. Cable colour white & length 1.2 metre. **Only suitable with Chrome T-Piece - 8.901. Not suitable with Dual Fuel Valves.**

WI-FI SMARTPHONE APPLICATION

Your WI-FI Element has the option of programming the air temperature in the daily and weekly cycles and meets the requirements of the EcoDesign Directive (Lot 20) is compatible with the EcoDirective 2018 for electric elements.

Wi-Fi 2.4 GHz

Model is distinguished by modern design, equipped with an electronic controller with an LED display. Additionally, the model is equipped with a cover covering the electrical connection.

Download the "SUPLA" app from Google Play Store or Apple App Store.

Video instructions for the smartphone app available on our website.

Gloss White

Element Type F WiFi With D Shape Cap - Gloss White

Description	Colour	Code	£ Ex VAT	£ Inc VAT
150W Type F Element Wi-Fi with D Shape Cap	Gloss White	8.484	282.00	**338.40**
300W Type F Element Wi-Fi with D Shape Cap	Gloss White	8.485	288.00	**345.60**
600W Type F Element Wi-Fi with D Shape Cap	Gloss White	8.486	292.00	**350.40**
900W Type F Element Wi-Fi with D Shape Cap	Gloss White	8.487	302.00	**362.40**
1200W Type F Element Wi-Fi with D Shape Cap	Gloss White	8.488	308.00	**369.60**
Spare Remote Controller for Type F Element		8.319	67.00	**80.40**
Fluid filling for above rail (electric only)*	-	FF	60.00	**72.00**

*(not including appropriate element). I.P. rating 54. (Zone 2 and 3)
Please note all fluid filled rails are special order and are **non-returnable**.

Matt Anthracite

Element Type F WiFi With D Shape Cap - Matt Anthracite

Description	Colour	Code	£ Ex VAT	£ Inc VAT
150W Type F Element Wi-Fi with D Shape Cap	Matt Anthracite	8.489	305.00	**366.00**
300W Type F Element Wi-Fi with D Shape Cap	Matt Anthracite	8.490	311.00	**373.20**
600W Type F Element Wi-Fi with D Shape Cap	Matt Anthracite	8.491	315.00	**378.00**
900W Type F Element Wi-Fi with D Shape Cap	Matt Anthracite	8.492	325.00	**390.00**
1200W Type F Element Wi-Fi with D Shape Cap	Matt Anthracite	8.493	331.00	**397.20**
Spare Remote Controller for Type F Element		8.319	67.00	**80.40**
Fluid filling for above rail (electric only)*	-	FF	60.00	**72.00**

*(not including appropriate element). I.P. rating 54. (Zone 2 and 3)
Please note all fluid filled rails are special order and are **non-returnable**.

Matt Black

Element Type F WiFi With D Shape Cap - Matt Black

Description	Colour	Code	£ Ex VAT	£ Inc VAT
150W Type F Element Wi-Fi with D Shape Cap	Matt Black	8.494	305.00	**366.00**
300W Type F Element Wi-Fi with D Shape Cap	Matt Black	8.495	311.00	**373.20**
600W Type F Element Wi-Fi with D Shape Cap	Matt Black	8.496	315.00	**378.00**
900W Type F Element Wi-Fi with D Shape Cap	Matt Black	8.497	325.00	**390.00**
1200W Type F Element Wi-Fi with D Shape Cap	Matt Black	8.498	331.00	**397.20**
Spare Remote Controller for Type F Element		8.319	67.00	**80.40**
Fluid filling for above rail (electric only)*	-	FF	60.00	**72.00**

*(not including appropriate element). I.P. rating 54. (Zone 2 and 3)
Please note all fluid filled rails are special order and are **non-returnable**.

Elements

Element Type F WiFi With Round Cap - Chrome				
Description	Colour	Code	£ Ex VAT	£ Inc VAT
150W Type F Element Wi-Fi with Round Cap	Chrome	8.499	296.00	**355.20**
300W Type F Element Wi-Fi with Round Cap	Chrome	8.500	302.00	**362.40**
600W Type F Element Wi-Fi with Round Cap	Chrome	8.501	306.00	**367.20**
900W Type F Element Wi-Fi with Round Cap	Chrome	8.502	310.00	**372.00**
1200W Type F Element Wi-Fi with Round Cap	Chrome	8.503	317.00	**380.40**
Spare Remote Controller for Type F Element		8.319	67.00	**80.40**
Fluid filling for above rail (electric only)*	-	FF	60.00	**72.00**

*(not including appropriate element). I.P. rating 54. (Zone 2 and 3)
Please note all fluid filled rails are special order and are **non-returnable**.

FEATURES

- Wi-Fi & App Control
- Comes with remote control, that acts as ambient temperature sensor
- Turbo boost function (1-3 hours)
- Off season heating
- Cable connection cover included
- Anti-Freeze function
- Daily & weekly programmable (only on Ambient Mode available)
- Low running costs, towel drying
- Smooth temperature adjustment (10°C - 65°C)
- Thermostat can control either water temperature or ambient room temperature
- Open window detection
- Eco Design ready

TECHNICAL INFORMATION

For an all electric towel rail/radiator, fluid filling must be purchased. Electric only elements will be fitted RH side unless otherwise specified. Cable colour white & length 1.2 metre. **Only suitable with Chrome T-Piece - 8.901. Not suitable with Dual Fuel Valves.**

ELEMENT TYPE F WI-FI ROUND CAP

WATER OR ROOM TEMPERATURE CONTROL

ECODESIGN READY

Only suitable with Chrome T-Piece - 8.901

Chrome

Power	Length (mm)
150W	300
300W	340
600W	390
900W	440
1200W	470

Turbo Boost Function

For vertical installation only. Digital temp control element including remote control.

Gloss White

Element Type F WiFi With Round Cap - Gloss White				
Description	Colour	Code	£ Ex VAT	£ Inc VAT
150W Type F Element Wi-Fi with Round Cap	Gloss White	8.504	282.00	**338.40**
300W Type F Element Wi-Fi with Round Cap	Gloss White	8.505	288.00	**345.60**
600W Type F Element Wi-Fi with Round Cap	Gloss White	8.506	292.00	**350.40**
900W Type F Element Wi-Fi with Round Cap	Gloss White	8.507	302.00	**362.40**
1200W Type F Element Wi-Fi with Round Cap	Gloss White	8.508	308.00	**369.60**
Spare Remote Controller for Type F Element		8.319	67.00	**80.40**
Fluid filling for above rail (electric only)*	-	FF	60.00	**72.00**

*(not including appropriate element). I.P. rating 54. (Zone 2 and 3)
Please note all fluid filled rails are special order and are **non-returnable**.

WI-FI SMARTPHONE APPLICATION

Wi-Fi
2.4 GHz

Your WIFI Element has the option of programming the air temperature in the daily and weekly cycles and meets the requirements of the EcoDesign Directive (Lot 20) is compatible with the EcoDirective 2018 for electric elements.

Model is distinguished by modern design, equipped with an electronic controller with an LED display. Additionally, the model is equipped with a cover covering the electrical connection.

Download the "SUPLA" app from Google Play Store or Apple App Store.

Video instructions for the smartphone app available on our website.

Matt Anthracite

Element Type F WiFi With Round Cap - Matt Anthracite				
Description	Colour	Code	£ Ex VAT	£ Inc VAT
150W Type F Element Wi-Fi with Round Cap	Matt Anthracite	8.509	305.00	**366.00**
300W Type F Element Wi-Fi with Round Cap	Matt Anthracite	8.510	311.00	**373.20**
600W Type F Element Wi-Fi with Round Cap	Matt Anthracite	8.511	315.00	**378.00**
900W Type F Element Wi-Fi with Round Cap	Matt Anthracite	8.512	325.00	**390.00**
1200W Type F Element Wi-Fi with Round Cap	Matt Anthracite	8.513	331.00	**397.20**
Spare Remote Controller for Type F Element		8.319	67.00	**80.40**
Fluid filling for above rail (electric only)*	-	FF	60.00	**72.00**

*(not including appropriate element). I.P. rating 54. (Zone 2 and 3)
Please note all fluid filled rails are special order and are **non-returnable**.

Matt Black

Element Type F WiFi With Round Cap - Matt Black				
Description	Colour	Code	£ Ex VAT	£ Inc VAT
150W Type F Element Wi-Fi with Round Cap	Matt Black	8.514	305.00	**366.00**
300W Type F Element Wi-Fi with Round Cap	Matt Black	8.515	311.00	**373.20**
600W Type F Element Wi-Fi with Round Cap	Matt Black	8.516	315.00	**378.00**
900W Type F Element Wi-Fi with Round Cap	Matt Black	8.517	325.00	**390.00**
1200W Type F Element Wi-Fi with Round Cap	Matt Black	8.518	331.00	**397.20**
Spare Remote Controller for Type F Element		8.319	67.00	**80.40**
Fluid filling for above rail (electric only)*	-	FF	60.00	**72.00**

*(not including appropriate element). I.P. rating 54. (Zone 2 and 3)
Please note all fluid filled rails are special order and are **non-returnable**.

Elements

WATER OR ROOM TEMPERATURE CONTROL

ELEMENT TYPE F WI-FI SQUARE CAP

Only suitable with Chrome T-Piece - 8.901

Chrome

Power	Length (mm)
150W	300
300W	340
600W	390
900W	440
1200W	470

Turbo Boost Function

For vertical installation only. Digital temp control element including remote control.

Element Type F WiFi With Square Cap - Chrome

Description	Colour	Code	£ Ex VAT	£ Inc VAT
150W Type F Element Wi-Fi with Square Cap	Chrome	8.519	296.00	**355.20**
300W Type F Element Wi-Fi with Square Cap	Chrome	8.520	302.00	**362.40**
600W Type F Element Wi-Fi with Square Cap	Chrome	8.521	306.00	**367.20**
900W Type F Element Wi-Fi with Square Cap	Chrome	8.522	310.00	**372.00**
1200W Type F Element Wi-Fi with Square Cap	Chrome	8.523	317.00	**380.40**
Spare Remote Controller for Type F Element		8.319	67.00	**80.40**
Fluid filling for above rail (electric only)*	-	FF	60.00	**72.00**

*(not including appropriate element). I.P. rating 54. (Zone 2 and 3)
Please note all fluid filled rails are special order and are **non-returnable**.

FEATURES

- Wi-Fi & App Control
- Comes with remote control, that acts as ambient temperature sensor
- Turbo boost function (1-3 hours)
- Off season heating
- Cable connection cover included
- Anti-Freeze function
- Daily & weekly programmable (only on Ambient Mode available)
- Low running costs, towel drying
- Smooth temperature adjustment (10°C - 65°C)
- Thermostat can control either water temperature or ambient room temperature
- Open window detection
- Eco Design ready

TECHNICAL INFORMATION

For an all electric towel rail/radiator, fluid filling must be purchased. Electric only elements will be fitted RH side unless otherwise specified. Cable colour white & length 1.2 metre. **Only suitable with Chrome T-Piece - 8.901. Not suitable with Dual Fuel Valves.**

WI-FI SMARTPHONE APPLICATION

Your WIFI Element has the option of programming the air temperature in the daily and weekly cycles and meets the requirements of the EcoDesign Directive (Lot 20) is compatible with the EcoDirective 2018 for electric elements.

Wi-Fi 2.4 GHz

Model is distinguished by modern design, equipped with an electronic controller with an LED display. Additionally, the model is equipped with a cover covering the electrical connection.

Download the "SUPLA" app from Google Play Store or Apple App Store.

Video instructions for the smartphone app available on our website.

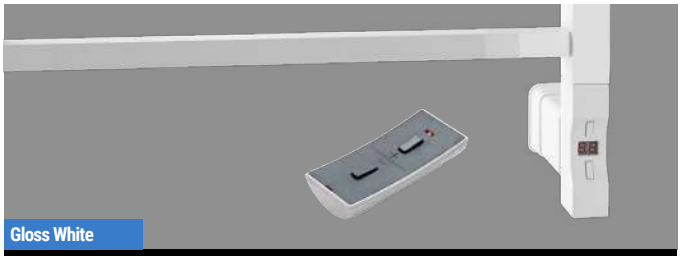

Gloss White

Element Type F WiFi With Square Cap - Gloss White

Description	Colour	Code	£ Ex VAT	£ Inc VAT
150W Type F Element Wi-Fi with Square Cap	Gloss White	8.524	282.00	**338.40**
300W Type F Element Wi-Fi with Square Cap	Gloss White	8.525	288.00	**345.60**
600W Type F Element Wi-Fi with Square Cap	Gloss White	8.526	292.00	**350.40**
900W Type F Element Wi-Fi with Square Cap	Gloss White	8.527	302.00	**362.40**
1200W Type F Element Wi-Fi with Square Cap	Gloss White	8.528	308.00	**369.60**
Spare Remote Controller for Type F Element		8.319	67.00	**80.40**
Fluid filling for above rail (electric only)*	-	FF	60.00	**72.00**

*(not including appropriate element). I.P. rating 54. (Zone 2 and 3)
Please note all fluid filled rails are special order and are **non-returnable**.

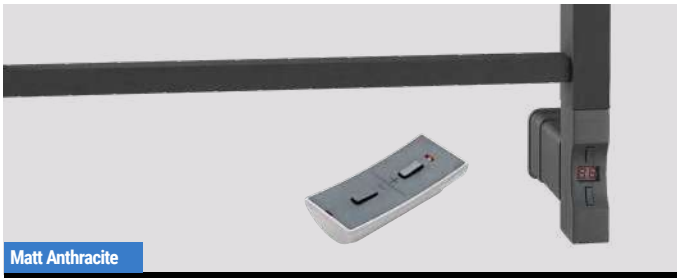

Matt Anthracite

Element Type F WiFi With Square Cap - Matt Anthracite

Description	Colour	Code	£ Ex VAT	£ Inc VAT
150W Type F Element Wi-Fi with Square Cap	Matt Anthracite	8.529	305.00	**366.00**
300W Type F Element Wi-Fi with Square Cap	Matt Anthracite	8.530	311.00	**373.20**
600W Type F Element Wi-Fi with Square Cap	Matt Anthracite	8.531	315.00	**378.00**
900W Type F Element Wi-Fi with Square Cap	Matt Anthracite	8.532	325.00	**390.00**
1200W Type F Element Wi-Fi with Square Cap	Matt Anthracite	8.533	331.00	**397.20**
Spare Remote Controller for Type F Element		8.319	67.00	**80.40**
Fluid filling for above rail (electric only)*	-	FF	60.00	**72.00**

*(not including appropriate element). I.P. rating 54. (Zone 2 and 3)
Please note all fluid filled rails are special order and are **non-returnable**.

Matt Black

Element Type F WiFi With Square Cap - Matt Black

Description	Colour	Code	£ Ex VAT	£ Inc VAT
150W Type F Element Wi-Fi with Square Cap	Matt Black	8.534	305.00	**366.00**
300W Type F Element Wi-Fi with Square Cap	Matt Black	8.535	311.00	**373.20**
600W Type F Element Wi-Fi with Square Cap	Matt Black	8.536	315.00	**378.00**
900W Type F Element Wi-Fi with Square Cap	Matt Black	8.537	325.00	**390.00**
1200W Type F Element Wi-Fi with Square Cap	Matt Black	8.538	331.00	**397.20**
Spare Remote Controller for Type F Element		8.319	67.00	**80.40**
Fluid filling for above rail (electric only)*	-	FF	60.00	**72.00**

*(not including appropriate element). I.P. rating 54. (Zone 2 and 3)
Please note all fluid filled rails are special order and are **non-returnable**.

Elements

Element Type G With D Shape Cap - Chrome

Description	Colour	Code	£ Ex VAT	£ Inc VAT
150W Type G Element with D Shape Cap	Chrome	8.404	171.00	**205.20**
300W Type G Element with D Shape Cap	Chrome	8.405	177.00	**212.40**
600W Type G Element with D Shape Cap	Chrome	8.406	185.00	**222.00**
900W Type G Element with D Shape Cap	Chrome	8.407	195.00	**234.00**
1200W Type G Element with D Shape Cap	Chrome	8.408	201.00	**241.20**
Fluid filling for above rail (electric only)*	-	FF	60.00	**72.00**

*(not including appropriate element). I.P. rating 54. (Zone 2 and 3)
Please note all fluid filled rails are special order and are **non-returnable**.

FEATURES

- Timer 1-9 hour
- Turbo boost function
- Off season heating
- Cable connection cover included
- Anti-Freeze function
- Maintains previously selected temperature for a period of 1-9 hours
- Low running costs, towel drying
- Smooth temperature adjustment (10°C to 65°C)
- Water temperature controlled Thermostat

TECHNICAL INFORMATION

For an all electric towel rail/radiator, fluid filling must be purchased. Electric only elements will be fitted RH side unless otherwise specified. Cable colour white & length 1.2 metre. **Only suitable with Chrome T-Piece - 8.901. Not suitable with Dual Fuel Valves.**

ELEMENT TYPE G WITH D SHAPE CAP

WATER TEMPERATURE CONTROL

Only suitable with Chrome T-Piece - 8.901

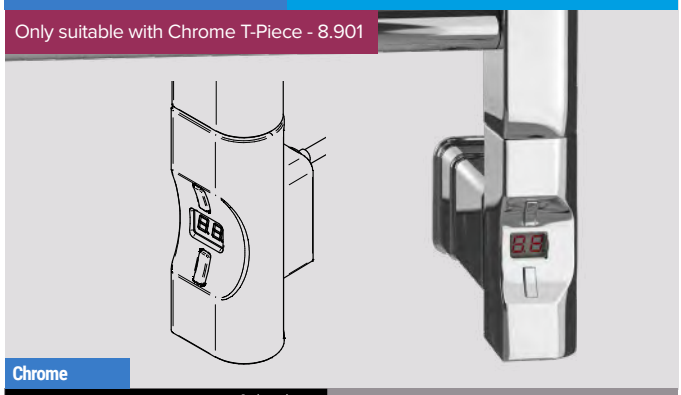

Chrome

Power	Length (mm)
150W	300
300W	340
600W	390
900W	440
1200W	470

Turbo Boost Function

For vertical installation only. Digital temp control element.

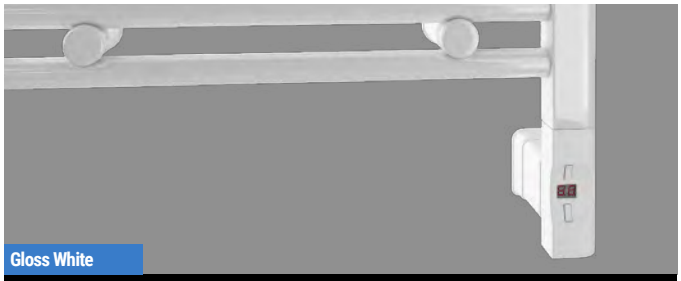

Gloss White

Element Type G With D Shape Cap - Gloss White

Description	Colour	Code	£ Ex VAT	£ Inc VAT
150W Type G Element with D Shape Cap	Gloss White	8.409	161.00	**193.20**
300W Type G Element with D Shape Cap	Gloss White	8.410	166.00	**199.20**
600W Type G Element with D Shape Cap	Gloss White	8.411	177.00	**212.40**
900W Type G Element with D Shape Cap	Gloss White	8.412	181.00	**217.20**
1200W Type G Element with D Shape Cap	Gloss White	8.413	185.00	**222.00**
Fluid filling for above rail (electric only)*	-	FF	60.00	**72.00**

*(not including appropriate element). I.P. rating 54. (Zone 2 and 3)
Please note all fluid filled rails are special order and are **non-returnable**.

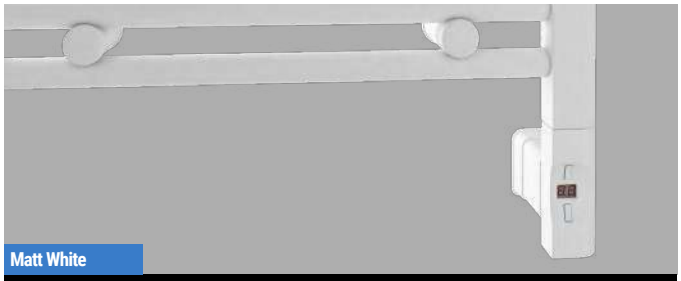

Matt White

Element Type G With D Shape Cap - Matt White

Description	Colour	Code	£ Ex VAT	£ Inc VAT
150W Type G Element with D Shape Cap	Matt White	8.414	185.00	**222.00**
300W Type G Element with D Shape Cap	Matt White	8.415	191.00	**229.20**
600W Type G Element with D Shape Cap	Matt White	8.416	201.00	**241.20**
900W Type G Element with D Shape Cap	Matt White	8.417	206.00	**247.20**
1200W Type G Element with D Shape Cap	Matt White	8.418	212.00	**254.40**
Fluid filling for above rail (electric only)*	-	FF	60.00	**72.00**

*(not including appropriate element). I.P. rating 54. (Zone 2 and 3)
Please note all fluid filled rails are special order and are **non-returnable**.

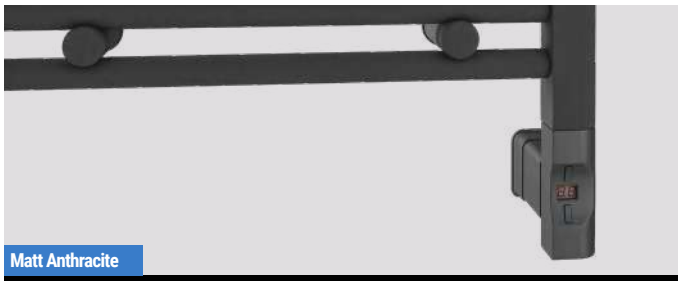

Matt Anthracite

Element Type G With D Shape Cap - Matt Anthracite

Description	Colour	Code	£ Ex VAT	£ Inc VAT
150W Type G Element with D Shape Cap	Matt Anthracite	8.419	185.00	**222.00**
300W Type G Element with D Shape Cap	Matt Anthracite	8.420	191.00	**229.20**
600W Type G Element with D Shape Cap	Matt Anthracite	8.421	201.00	**241.20**
900W Type G Element with D Shape Cap	Matt Anthracite	8.422	206.00	**247.20**
1200W Type G Element with D Shape Cap	Matt Anthracite	8.423	212.00	**254.40**
Fluid filling for above rail (electric only)*	-	FF	60.00	**72.00**

*(not including appropriate element). I.P. rating 54. (Zone 2 and 3)
Please note all fluid filled rails are special order and are **non-returnable**.

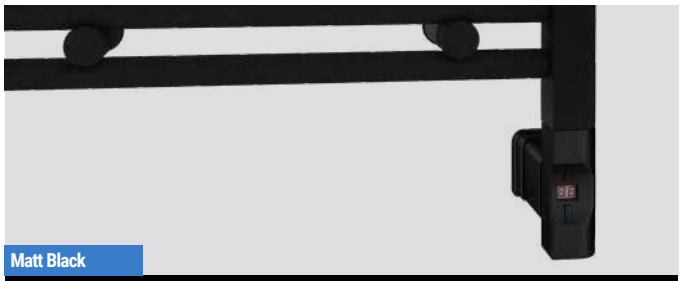

Matt Black

Element Type G With D Shape Cap - Matt Black

Description	Colour	Code	£ Ex VAT	£ Inc VAT
150W Type G Element with D Shape Cap	Matt Black	8.424	185.00	**222.00**
300W Type G Element with D Shape Cap	Matt Black	8.425	191.00	**229.20**
600W Type G Element with D Shape Cap	Matt Black	8.426	201.00	**241.20**
900W Type G Element with D Shape Cap	Matt Black	8.427	206.00	**247.20**
1200W Type G Element with D Shape Cap	Matt Black	8.428	212.00	**254.40**
Fluid filling for above rail (electric only)*	-	FF	60.00	**72.00**

*(not including appropriate element). I.P. rating 54. (Zone 2 and 3)
Please note all fluid filled rails are special order and are **non-returnable**.

Elements

ELEMENT TYPE G WITH ROUND CAP

WATER TEMPERATURE CONTROL

Only suitable with Chrome T-Piece - 8.901

Chrome

Power	Length (mm)
150W	300
300W	340
600W	390
900W	440
1200W	470

Turbo Boost Function

For vertical installation only.
Digital temp control element.

Element Type G With Round Cap - Chrome

Description	Colour	Code	£ Ex VAT	£ Inc VAT
150W Type G Element with Round Cap	Chrome	8.429	171.00	**205.20**
300W Type G Element with Round Cap	Chrome	8.430	177.00	**212.40**
600W Type G Element with Round Cap	Chrome	8.431	185.00	**222.00**
900W Type G Element with Round Cap	Chrome	8.432	195.00	**234.00**
1200W Type G Element with Round Cap	Chrome	8.433	201.00	**241.20**
Fluid filling for above rail (electric only)*	-	FF	60.00	**72.00**

*(not including appropriate element). I.P. rating 54. (Zone 2 and 3)
Please note all fluid filled rails are special order and are **non-returnable**.

FEATURES

- Timer 1-9 hour
- Turbo boost function
- Off season heating
- Cable connection cover included
- Anti-Freeze function
- Maintains previously selected temperature for a period of 1-9 hours
- Low running costs, towel drying
- Smooth temperature adjustment (10°C to 65°C)
- Water temperature controlled Thermostat

TECHNICAL INFORMATION

For an all electric towel rail/radiator, fluid filling must be purchased. Electric only elements will be fitted RH side unless otherwise specified. Cable colour white & length 1.2 metre. **Only suitable with Chrome T-Piece - 8.901. Not suitable with Dual Fuel Valves.**

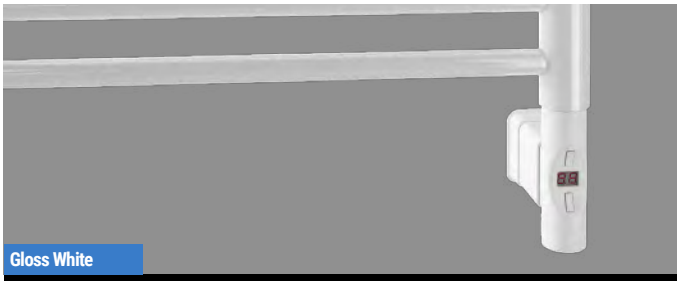

Gloss White

Element Type G With Round Cap - Gloss White

Description	Colour	Code	£ Ex VAT	£ Inc VAT
150W Type G Element with Round Cap	Gloss White	8.434	161.00	**193.20**
300W Type G Element with Round Cap	Gloss White	8.435	166.00	**199.20**
600W Type G Element with Round Cap	Gloss White	8.436	177.00	**212.40**
900W Type G Element with Round Cap	Gloss White	8.437	181.00	**217.20**
1200W Type G Element with Round Cap	Gloss White	8.438	185.00	**222.00**
Fluid filling for above rail (electric only)*	-	FF	60.00	**72.00**

*(not including appropriate element). I.P. rating 54. (Zone 2 and 3)
Please note all fluid filled rails are special order and are **non-returnable**.

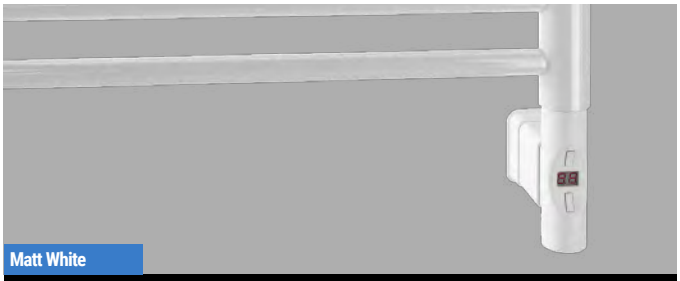

Matt White

Element Type G With Round Cap - Matt White

Description	Colour	Code	£ Ex VAT	£ Inc VAT
150W Type G Element with Round Cap	Matt White	8.439	185.00	**222.00**
300W Type G Element with Round Cap	Matt White	8.440	191.00	**229.20**
600W Type G Element with Round Cap	Matt White	8.441	201.00	**241.20**
900W Type G Element with Round Cap	Matt White	8.442	206.00	**247.20**
1200W Type G Element with Round Cap	Matt White	8.443	212.00	**254.40**
Fluid filling for above rail (electric only)*	-	FF	60.00	**72.00**

*(not including appropriate element). I.P. rating 54. (Zone 2 and 3)
Please note all fluid filled rails are special order and are **non-returnable**.

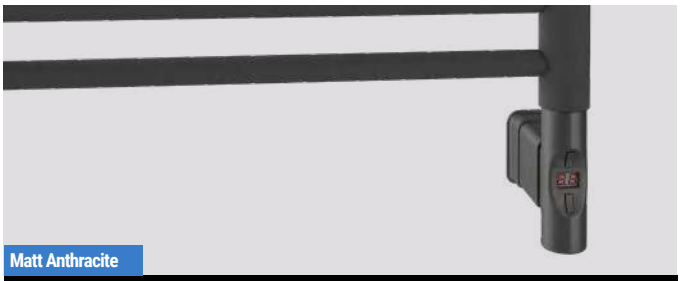

Matt Anthracite

Element Type G With Round Cap - Matt Anthracite

Description	Colour	Code	£ Ex VAT	£ Inc VAT
150W Type G Element with Round Cap	Matt Anthracite	8.444	185.00	**222.00**
300W Type G Element with Round Cap	Matt Anthracite	8.445	191.00	**229.20**
600W Type G Element with Round Cap	Matt Anthracite	8.446	201.00	**241.20**
900W Type G Element with Round Cap	Matt Anthracite	8.447	206.00	**247.20**
1200W Type G Element with Round Cap	Matt Anthracite	8.448	212.00	**254.40**
Fluid filling for above rail (electric only)*	-	FF	60.00	**72.00**

*(not including appropriate element). I.P. rating 54. (Zone 2 and 3)
Please note all fluid filled rails are special order and are **non-returnable**.

Matt Black

Element Type G With Round Cap - Matt Black

Description	Colour	Code	£ Ex VAT	£ Inc VAT
150W Type G Element with Round Cap	Matt Black	8.449	185.00	**222.00**
300W Type G Element with Round Cap	Matt Black	8.450	191.00	**229.20**
600W Type G Element with Round Cap	Matt Black	8.451	201.00	**241.20**
900W Type G Element with Round Cap	Matt Black	8.452	206.00	**247.20**
1200W Type G Element with Round Cap	Matt Black	8.453	212.00	**254.40**
Fluid filling for above rail (electric only)*	-	FF	60.00	**72.00**

*(not including appropriate element). I.P. rating 54. (Zone 2 and 3)
Please note all fluid filled rails are special order and are **non-returnable**.

Elements

Element Type G With Square Cap - Chrome

Description	Colour	Code	£ Ex VAT	£ Inc VAT
150W Type G Element with Square Cap	Chrome	8.454	171.00	**205.20**
300W Type G Element with Square Cap	Chrome	8.455	177.00	**212.40**
600W Type G Element with Square Cap	Chrome	8.456	185.00	**222.00**
900W Type G Element with Square Cap	Chrome	8.457	195.00	**234.00**
1200W Type G Element with Square Cap	Chrome	8.458	201.00	**241.20**
Fluid filling for above rail (electric only)*	-	FF	60.00	**72.00**

*(not including appropriate element). I.P. rating 54. (Zone 2 and 3)
Please note all fluid filled rails are special order and are **non-returnable**.

FEATURES

- Timer 1-9 hour
- Turbo boost function
- Off season heating
- Cable connection cover included
- Anti-Freeze function
- Maintains previously selected temperature for a period of 1-9 hours
- Low running costs, towel drying
- Smooth temperature adjustment (10°C to 65°C)
- Water temperature controlled Thermostat

TECHNICAL INFORMATION

For an all electric towel rail/radiator, fluid filling must be purchased. Electric only elements will be fitted RH side unless otherwise specified. Cable colour white & length 1.2 metre. **Only suitable with Chrome T-Piece - 8.901. Not suitable with Dual Fuel Valves.**

ELEMENT TYPE G WITH SQUARE CAP

WATER TEMPERATURE CONTROL

Only suitable with Chrome T-Piece - 8.901

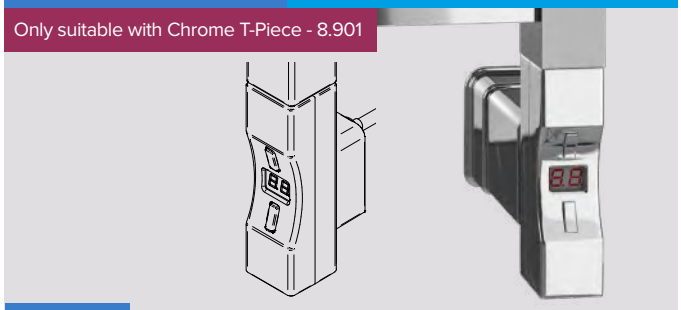

Chrome

Power	Length (mm)
150W	300
300W	340
600W	390
900W	440
1200W	470

Turbo Boost Function

For vertical installation only.
Digital temp control element.

Gloss White

Element Type G With Square Cap - Gloss White

Description	Colour	Code	£ Ex VAT	£ Inc VAT
150W Type G Element with Square Cap	Gloss White	8.459	161.00	**193.20**
300W Type G Element with Square Cap	Gloss White	8.460	166.00	**199.20**
600W Type G Element with Square Cap	Gloss White	8.461	177.00	**212.40**
900W Type G Element with Square Cap	Gloss White	8.462	181.00	**217.20**
1200W Type G Element with Square Cap	Gloss White	8.463	185.00	**222.00**
Fluid filling for above rail (electric only)*	-	FF	60.00	**72.00**

*(not including appropriate element). I.P. rating 54. (Zone 2 and 3)
Please note all fluid filled rails are special order and are **non-returnable**.

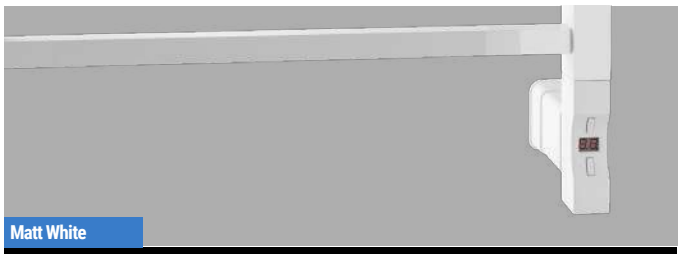

Matt White

Element Type G With Square Cap - Matt White

Description	Colour	Code	£ Ex VAT	£ Inc VAT
150W Type G Element with Square Cap	Matt White	8.464	185.00	**222.00**
300W Type G Element with Square Cap	Matt White	8.465	191.00	**229.20**
600W Type G Element with Square Cap	Matt White	8.466	201.00	**241.20**
900W Type G Element with Square Cap	Matt White	8.467	206.00	**247.20**
1200W Type G Element with Square Cap	Matt White	8.468	212.00	**254.40**
Fluid filling for above rail (electric only)*	-	FF	60.00	**72.00**

*(not including appropriate element). I.P. rating 54. (Zone 2 and 3)
Please note all fluid filled rails are special order and are **non-returnable**.

Matt Anthracite

Element Type G With Square Cap - Matt Anthracite

Description	Colour	Code	£ Ex VAT	£ Inc VAT
150W Type G Element with Square Cap	Matt Anthracite	8.469	185.00	**222.00**
300W Type G Element with Square Cap	Matt Anthracite	8.470	191.00	**229.20**
600W Type G Element with Square Cap	Matt Anthracite	8.471	201.00	**241.20**
900W Type G Element with Square Cap	Matt Anthracite	8.472	206.00	**247.20**
1200W Type G Element with Square Cap	Matt Anthracite	8.473	212.00	**254.40**
Fluid filling for above rail (electric only)*	-	FF	60.00	**72.00**

*(not including appropriate element). I.P. rating 54. (Zone 2 and 3)
Please note all fluid filled rails are special order and are **non-returnable**.

Matt Black

Element Type G With Square Cap - Matt Black

Description	Colour	Code	£ Ex VAT	£ Inc VAT
150W Type G Element with Square Cap	Matt Black	8.474	185.00	**222.00**
300W Type G Element with Square Cap	Matt Black	8.475	191.00	**229.20**
600W Type G Element with Square Cap	Matt Black	8.476	201.00	**241.20**
900W Type G Element with Square Cap	Matt Black	8.477	206.00	**247.20**
1200W Type G Element with Square Cap	Matt Black	8.478	212.00	**254.40**
Fluid filling for above rail (electric only)*	-	FF	60.00	**72.00**

*(not including appropriate element). I.P. rating 54. (Zone 2 and 3)
Please note all fluid filled rails are special order and are **non-returnable**.

All Eastbrook fluid filled rails are filled with Fernox HP-5.
With over 40 years experience and continual investment in research and development, Fernox water treatment products are manufactured to the highest quality, reliability and performance. Fernox HP-5 is a pre-blended heat transfer fluid which gives a frost protection down to -5°C. It also provides long-term protection from damage caused by corrosion, limescale and bacteria and maintains a stable pH across a range of operational temperatures.

FEATURES - FERNOX

- Anti-cavitation (lower noise)
- Better heat transfer
- Anti-corrosion properties
- Anti-freeze

FERNOX MAKES WATER WORK

Elements

WATER OR ROOM TEMPERATURE CONTROL

Power	Length (mm)
300W	340
600W	390
900W	440
1200W	470

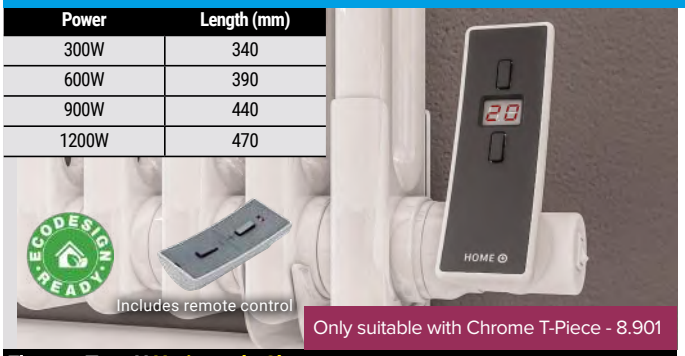

Only suitable with Chrome T-Piece - 8.901

ELEMENT TYPE H HORIZONTAL

FEATURES
- Turbo boost function (full heating for a set period 1, 2 or 3 hours)
- Off season heating
- Anti-Freeze function
- Low running costs
- Eco Design ready
- Smooth temperature adjustment (10°C to 65°C)
- Comes with remote control, that acts as ambient temperature sensor
- Thermostat can control either water temperature or ambient room temperature
- Can be fitted on LH or RH side by 180°C rotating thermostat

TECHNICAL INFORMATION

For an all electric towel rail/radiator, fluid filling must be purchased. Electric only elements will be fitted RH side unless otherwise specified. **Only suitable with Chrome T-Piece - 8.901. Not suitable with Dual Fuel Valves.**

Element Type H Horizontal - Chrome

Description	Colour	Code	£ Ex VAT	£ Inc VAT
300W Type H Element Horizontal**	Chrome	8.554	303.00	**363.60**
600W Type H Element Horizontal**	Chrome	8.555	308.00	**369.60**
900W Type H Element Horizontal**	Chrome	8.556	312.00	**374.40**
1200W Type H Element Horizontal**	Chrome	8.557	318.00	**381.60**
Fluid filling for above rail (electric only)*	-	FF	60.00	**72.00**

Element Type H Horizontal - Gloss White

Description	Colour	Code	£ Ex VAT	£ Inc VAT
300W Type H Element Horizontal**	Gloss White	8.539	279.00	**334.80**
600W Type H Element Horizontal**	Gloss White	8.540	283.00	**339.60**
900W Type H Element Horizontal**	Gloss White	8.541	288.00	**345.60**
1200W Type H Element Horizontal**	Gloss White	8.542	292.00	**350.40**
Fluid filling for above rail (electric only)*	-	FF	60.00	**72.00**

Element Type H Horizontal - Matt Anthracite

Description	Colour	Code	£ Ex VAT	£ Inc VAT
300W Type H Element Horizontal**	Matt Anthracite	8.544	299.00	**358.80**
600W Type H Element Horizontal**	Matt Anthracite	8.545	303.00	**363.60**
900W Type H Element Horizontal**	Matt Anthracite	8.546	308.00	**369.60**
1200W Type H Element Horizontal**	Matt Anthracite	8.547	312.00	**374.40**
Fluid filling for above rail (electric only)*	-	FF	60.00	**72.00**

Element Type H Horizontal - Matt Black

Description	Colour	Code	£ Ex VAT	£ Inc VAT
300W Type H Element Horizontal**	Matt Black	8.549	299.00	**358.80**
600W Type H Element Horizontal**	Matt Black	8.550	303.00	**363.60**
900W Type H Element Horizontal**	Matt Black	8.551	308.00	**369.60**
1200W Type H Element Horizontal**	Matt Black	8.552	312.00	**374.40**
Fluid filling for above rail (electric only)*	-	FF	60.00	**72.00**

*(not including appropriate element, for all colours). I.P. rating 54. (Zone 2 and 3) Please note all fluid filled rails are special order and are **non-returnable**.

WATER OR ROOM TEMPERATURE CONTROL

Power	Length (mm)
300W	340
600W	390
900W	440
1200W	470

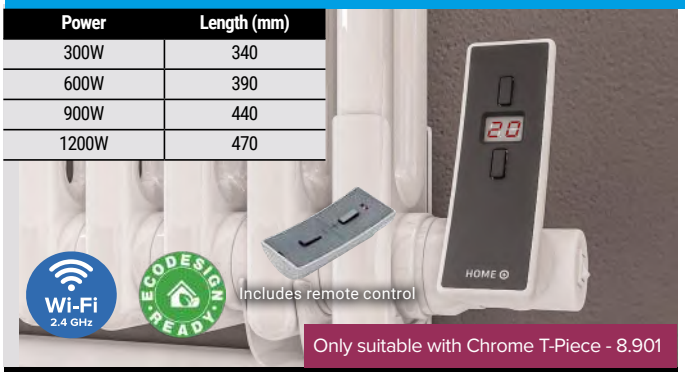

Only suitable with Chrome T-Piece - 8.901

ELEMENT TYPE H WI-FI HORIZONTAL

FEATURES
- Turbo boost function (full heating for a set period 1, 2 or 3 hours)
- Off season heating
- Anti-Freeze function
- Low running costs
- Eco Design ready
- Smooth temperature adjustment (10°C to 65°C)
- Wi-Fi & App Control
- Comes with remote control, that acts as ambient temperature sensor
- Thermostat can control either water temperature or ambient room temperature
- Can be fitted on LH or RH side by 180°C rotating thermostat

TECHNICAL INFORMATION

For an all electric towel rail/radiator, fluid filling must be purchased. Electric only elements will be fitted RH side unless otherwise specified. **Only suitable with Chrome T-Piece - 8.901. Not suitable with Dual Fuel Valves.**

Element Type H Wi-Fi Horizontal - Chrome

Description	Colour	Code	£ Ex VAT	£ Inc VAT
300W Type H Element Wi-Fi Horizontal**	Chrome	8.574	341.00	**409.20**
600W Type H Element Wi-Fi Horizontal**	Chrome	8.575	345.00	**414.00**
900W Type H Element Wi-Fi Horizontal**	Chrome	8.576	350.00	**420.00**
1200W Type H Element Wi-Fi Horizontal**	Chrome	8.577	354.00	**424.80**
Fluid filling for above rail (electric only)*	-	FF	60.00	**72.00**

Element Type H Wi-Fi Horizontal - Gloss White

Description	Colour	Code	£ Ex VAT	£ Inc VAT
300W Type H Element Wi-Fi Horizontal**	Gloss White	8.559	315.00	**378.00**
600W Type H Element Wi-Fi Horizontal**	Gloss White	8.560	321.00	**385.20**
900W Type H Element Wi-Fi Horizontal**	Gloss White	8.561	325.00	**390.00**
1200W Type H Element Wi-Fi Horizontal**	Gloss White	8.562	330.00	**396.00**
Fluid filling for above rail (electric only)*	-	FF	60.00	**72.00**

Element Type H Wi-Fi Horizontal - Matt Anthracite

Description	Colour	Code	£ Ex VAT	£ Inc VAT
300W Type H Element Wi-Fi Horizontal**	Matt Anthracite	8.564	335.00	**402.00**
600W Type H Element Wi-Fi Horizontal**	Matt Anthracite	8.565	341.00	**409.20**
900W Type H Element Wi-Fi Horizontal**	Matt Anthracite	8.566	345.00	**414.00**
1200W Type H Element Wi-Fi Horizontal**	Matt Anthracite	8.567	350.00	**420.00**
Fluid filling for above rail (electric only)*	-	FF	60.00	**72.00**

Element Type H Wi-Fi Horizontal - Matt Black

Description	Colour	Code	£ Ex VAT	£ Inc VAT
300W Type H Element Wi-Fi Horizontal**	Matt Black	8.569	335.00	**402.00**
600W Type H Element Wi-Fi Horizontal**	Matt Black	8.570	341.00	**409.20**
900W Type H Element Wi-Fi Horizontal**	Matt Black	8.571	345.00	**414.00**
1200W Type H Element Wi-Fi Horizontal**	Matt Black	8.572	350.00	**420.00**
Fluid filling for above rail (electric only)*	-	FF	60.00	**72.00**

*(not including appropriate element, for all colours). I.P. rating 54. (Zone 2 and 3) Please note all fluid filled rails are special order and are **non-returnable**.

WI-FI SMARTPHONE APPLICATION

Your WIFI Element has the option of programming the air temperature in the daily and weekly cycles and meets the requirements of the EcoDesign Directive (Lot 20) is compatible with the EcoDirective 2018 for electric elements.

Download the "SUPLA" App from Google Play Store or Apple App Store. Video instructions for the smartphone app available on our website.

Crafton Control Panel, T Pieces & Elbows

Crafton Temperature Control Panel

Description	Code	£ Ex VAT	£ Inc VAT
Crafton Temperature Control Panel White	67.0004	113.00	**135.60**
Crafton Temperature Control Panel Chrome Cover	67.0005	38.00	**45.60**

FEATURES
- Can be fitted in the bathroom (Zone 2 rated)
- IPX5 rated
- Active LED display
- 2 hour boost function
- Low running costs
- Wattage range 100-1000 watts
- 20-100% output control
- Can be used on dual fuel and electric only installations
- **Can only be fitted with Type A+/ A+ Eco, Type A Element and Biava Dry Element towel rail**
- Will fit all standard electrical back boxes

CRAFTON TEMPERATURE CONTROL PANEL

White Panel

Chrome Cover

Crafton II Temperature Control Panel

Description	Code	£ Ex VAT	£ Inc VAT
Crafton II Temperature Control Panel White	67.0010	82.00	**98.40**
Crafton II Temperature Control Panel Anthracite	67.0011	93.00	**111.60**
Crafton II Temperature Control Panel Black	67.0012	93.00	**111.60**
Crafton II Temperature Control Panel Chrome Effect	67.0013	88.00	**105.60**
Crafton II Temperature Control Panel Brass Effect	67.0014	97.00	**116.40**

FEATURES
- 85 x 85mm square in size
- Available in 5 colours
- Can be fitted in the bathroom (Zone 2, 3 rated)
- IPX4 rated
- Can be used in electric only and dual fuel applications
- Active LED display
- ECO function : When pressed will run for 30 minutes on highest output. Next 90 minutes will run in a lower pre-set output and then switch off. Total running time 120 minutes.
- Low running costs
- Wattage range 100-1000 watts
- Will remember the last setting when turned off and on again
- Output control ;
  1 LED = 40% power
  2 LEDs = 55% power
  3 LEDs = 70% power
  4 LEDs = 85% power
  5 LEDs = 100% power
- **Can only be fitted with Type A+/ A+ Eco, Type A Element and Biava Dry Element towel rail**
- Will fit all standard electrical back boxes

CRAFTON II TEMPERATURE CONTROL PANEL

White Panel

Anthracite Panel

Black Panel

Chrome Effect Panel

Brass Effect Panel

Wi-Fi On/Off Spur Switch

Description	Code	£ Ex VAT	£ Inc VAT
Wi-Fi On/Off Spur Switch White	41.0799	39.00	**46.80**

FEATURES
- Replaceable 13AMP BS1362 fuse
- Works with Wi-Fi 2.4 Ghz
- Program modes : Permanent On, Permanent Off, Boost & Countdown
- Daily & Weekly programmable
- Low running costs
- Max. load 3000 Watts
- Works with Smart Life APP.
- Wall box min. depth 25mm
- Ideal replacement for BS1363 fused spur
- **Would ideally work with Type A+/A+ Eco, Type A Element and Biava Dry Element towel rail**

WI-FI SMARTPHONE APPLICATION

Compatible with Alexa and Google Assistant. Works on Android & IOS.

Scan QR Code to download "Smart Life" App. Or download from either the Google Play Store or Apple App Store.

WI-FI ON/OFF SPUR SWITCH

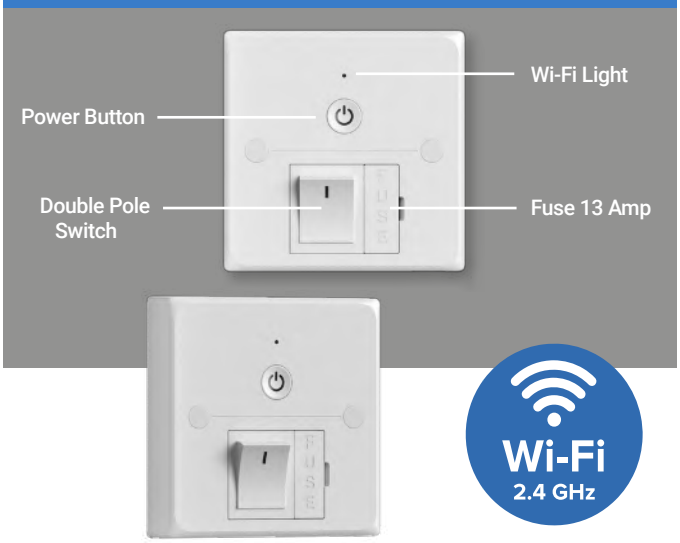

Dual Fuel - Element T Pieces & Elbows

Dual Fuel Elbows

Dual Fuel Elbows

Description	Code	£ Ex VAT	£ Inc VAT
Elbow Chrome	41.3003	17.00	**20.40**
Elbow Matt White	41.4040	19.00	**22.80**
Elbow Matt Grey	41.4041	19.00	**22.80**
Elbow Matt Cappuccino	41.4042	19.00	**22.80**
Elbow Matt Anthracite	41.4043	19.00	**22.80**
Elbow Matt Black	41.4044	19.00	**22.80**
Elbow Brushed Brass	41.0607	19.00	**22.80**

Dual Fuel T Pieces

Duel Fuel T Pieces

Description	Code	£ Ex VAT	£ Inc VAT
T Piece Chrome	8.901	18.00	**21.60**
T Piece Matt White	41.3030	23.00	**27.60**
T Piece Matt Grey	41.3031	23.00	**27.60**
T Piece Matt Cappuccino	41.3032	23.00	**27.60**
T Piece Matt Anthracite	41.3033	23.00	**27.60**
T Piece Matt Black	41.3034	23.00	**27.60**
T Piece Brushed Brass	41.0606	21.00	**25.20**

Valve Buying Guide

Radiator Valve Buying Guide

Step 1
Choose your towel rail or radiator. Remember to check where your central heating pipework is located.

Step 2
Check which type of connection your chosen radiator has. (Side or bottom connection).

Step 3
Choose from one of the below valve types which compatible with your pipework.

Angled Valves

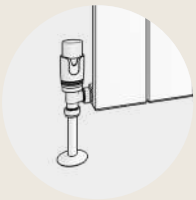

Manual Options **P346, 347, 348, 349, 350, 351 & 352**
Thermostatic (TRV) Options **P339, 340, 341, 343 & 345**

FEATURES
- Most used valve type.
- Connects radiator at 90° angle.
- Pipework can be from the wall or floor.

COMPATIBLE WITH:
- Connections at the sides & pipework from the floor.
- Connections at the sides & pipework from the wall.
- Connections at the bottom & pipework from the wall.

Corner Valves

Manual Options **P346, 348, 349 & 351**
Thermostatic (TRV) Options **P340, 341, 344 & 345**

FEATURES
- Connects radiator at 90° angle.
- On side connections, valve head sits vertically.
- On bottom connections, valve head sits under the radiator.

COMPATIBLE WITH:
- Connections at the sides & pipework from the wall.
- Connections at the bottom & pipework from the wall.

Straight Valves

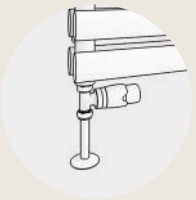

Manual Options **P346, 347, 348, 349, 350 & 351**
Thermostatic (TRV) Options **P339, 342 & 345**

FEATURES
- Fits best to bottom connection towel rails & radiators.
- Suitable only with bottom connection radiators & towel rails with pipework from the floor or along the wall.
- Can be connected vertically or horizontally depending on the pipework.

COMPATIBLE WITH:
- Connections at the bottom & pipework from the floor.

Twin Thermostatic Valves

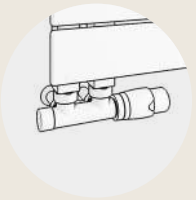

Thermostatic (TRV) Options **P340**

FEATURES
- Angled & Straight versions available.
- 50mm connection centres.
- Saves space by using one valve instead of two.
- Only suitable for selected models in our ranges.

COMPATIBLE WITH:
- Connections at the bottom & pipework from the floor.
- Connections at the bottom & pipework from the wall.

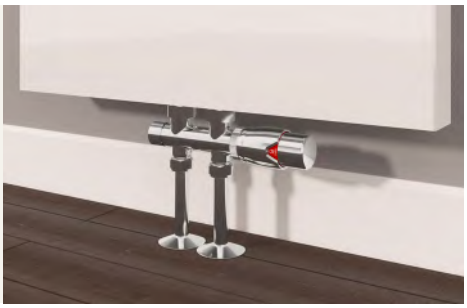

Dual Fuel Valves

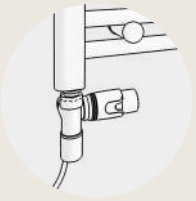

Manual Options **P353**
Thermostatic (TRV) Options **P353**

FEATURES
- Only corner version available.
- Elements can be fitted from both sides. (a selection of valves)
- Only Type A, Type A+ & Type A+ Eco elements can be used.

COMPATIBLE WITH:
- Connections at the bottom & pipework from the wall.

Drain Off Valves

P352

- Can be used to drain off radiators.

Pipe Shrouds & Collar Kits

P354-355

- 15mm pipe covering shrouds & collars for asthetic perfection.

Darlington Thermostatic Valves

DARLINGTON STRAIGHT TRV

BI-DIRECTIONAL — White/Chrome

Straight TRV with Lockshield 15mm (pair)

Code	£ Ex VAT	£ Inc VAT
54.0005	40.00	**48.00**

BI-DIRECTIONAL — Chrome

Straight TRV with Lockshield 15mm (pair)

Code	£ Ex VAT	£ Inc VAT
54.0003	39.00	**46.80**

BI-DIRECTIONAL — Brushed Nickel

Straight TRV with Lockshield 15mm (pair)

Code	£ Ex VAT	£ Inc VAT
54.0065	50.00	**60.00**

BI-DIRECTIONAL — Brushed Brass

Straight TRV with Lockshield 15mm (pair)

Code	£ Ex VAT	£ Inc VAT
54.0029	57.00	**68.40**

BI-DIRECTIONAL — Matt White

Straight TRV with Lockshield 15mm (pair)

Code	£ Ex VAT	£ Inc VAT
54.0019	45.00	**54.00**

BI-DIRECTIONAL — Matt Anthracite

Straight TRV with Lockshield 15mm (pair)

Code	£ Ex VAT	£ Inc VAT
54.0020	45.00	**54.00**

BI-DIRECTIONAL — Matt Black

Straight TRV with Lockshield 15mm (pair)

Code	£ Ex VAT	£ Inc VAT
54.0021	45.00	**54.00**

DARLINGTON ANGLED TRV

BI-DIRECTIONAL — White/Chrome

Angled TRV with Lockshield 15mm (pair)

Code	£ Ex VAT	£ Inc VAT
54.0006	39.00	**46.80**

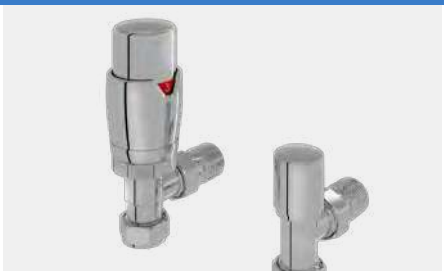

BI-DIRECTIONAL — Chrome

Angled TRV with Lockshield 15mm (pair)

Code	£ Ex VAT	£ Inc VAT
54.0002	38.00	**45.60**

BI-DIRECTIONAL — Brushed Nickel

Angled TRV with Lockshield 15mm (pair)

Code	£ Ex VAT	£ Inc VAT
54.0066	50.00	**60.00**

BI-DIRECTIONAL — Brushed Brass

Angled TRV with Lockshield 15mm (pair)

Code	£ Ex VAT	£ Inc VAT
54.0030	57.00	**68.40**

BI-DIRECTIONAL — Matt White

Angled TRV with Lockshield 15mm (pair)

Code	£ Ex VAT	£ Inc VAT
54.0016	44.00	**52.80**

FEATURES

- Approved to EN 1074-2:2000
- Produced to GB/T 19001-2016
- Produced to ISO 9001:2015
- 2 Year warranty with conditions

TECHNICAL INFORMATION

On all Darlington valves, the materials used can have a slight difference between their parts colours. The numbers on the TRV heads do not represent specific room temperatures as the temperature at which the valve operates depends on the water temperature flowing through the radiator, airflow around the head of the TRV, the room size and any heat loss in that space through walls, windows and floors.

Darlington Thermostatic Valves

DARLINGTON ANGLED TRV

BI-DIRECTIONAL — Matt Anthracite

Angled TRV with Lockshield 15mm (pair)

Code	£ Ex VAT	£ Inc VAT
54.0017	44.00	**52.80**

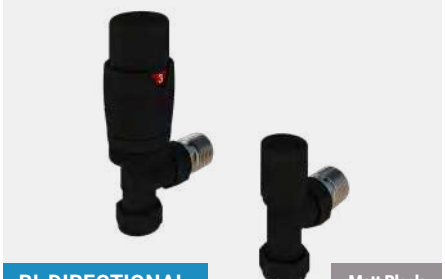

BI-DIRECTIONAL — Matt Black

Angled TRV with Lockshield 15mm (pair)

Code	£ Ex VAT	£ Inc VAT
54.0018	44.00	**52.80**

DARLINGTON CORNER TRV

BI-DIRECTIONAL — White/Chrome

Corner TRV with Lockshield 15mm (pair)

Code	£ Ex VAT	£ Inc VAT
54.0007	44.00	**52.80**

BI-DIRECTIONAL — Chrome

Corner TRV with Lockshield 15mm (pair)

Code	£ Ex VAT	£ Inc VAT
54.0004	40.00	**48.00**

BI-DIRECTIONAL — Brushed Nickel

Corner TRV with Lockshield 15mm (pair)

Code	£ Ex VAT	£ Inc VAT
54.0067	60.00	**72.00**

BI-DIRECTIONAL — Brushed Brass

Corner TRV with Lockshield 15mm (pair)

Code	£ Ex VAT	£ Inc VAT
54.0031	68.00	**81.60**

BI-DIRECTIONAL — Matt White

Corner TRV with Lockshield 15mm (pair)

Code	£ Ex VAT	£ Inc VAT
54.0022	52.00	**62.40**

BI-DIRECTIONAL — Matt Anthracite

Corner TRV with Lockshield 15mm (pair)

Code	£ Ex VAT	£ Inc VAT
54.0023	52.00	**62.40**

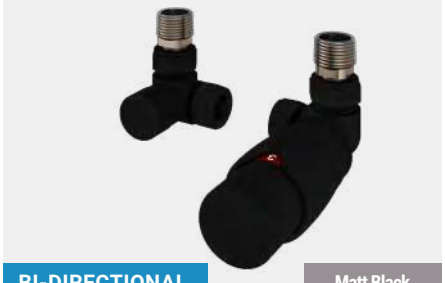

BI-DIRECTIONAL — Matt Black

Corner TRV with Lockshield 15mm (pair)

Code	£ Ex VAT	£ Inc VAT
54.0024	52.00	**62.40**

TWIN THERMOSTATIC VALVES

54.0012

Gloss White

54.0013

Chrome

54.0014

Gloss White

54.0015

Chrome

Twin Thermostatic Valves

Description	Colour	Code	£ Ex VAT	£ Inc VAT
Straight Twin inlet Thermostatic Radiator Valve 15mm	Gloss White	54.0012	74.00	**88.80**
Straight Twin inlet Thermostatic Radiator Valve 15mm	Chrome	54.0013	68.00	**81.60**
Angled Twin inlet Thermostatic Radiator Valve 15mm	Gloss White	54.0014	74.00	**88.80**
Angled Twin inlet Thermostatic Radiator Valve 15mm	Chrome	54.0015	68.00	**81.60**

FEATURES

- All twin thermostatic vales are 15 mm
- Tapping Centres: 50mm
- Approved to EN 1074-2:2000
- Produced to GB/T 19001-2016 and ISO 9001:2015
- 2 Year warranty*

*With conditions

Traditional Thermostatic Valves

TRADITIONAL ANGLED TRV

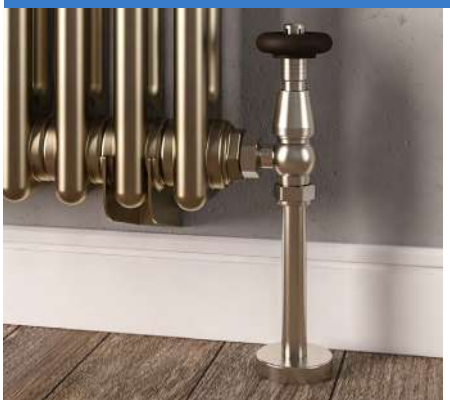

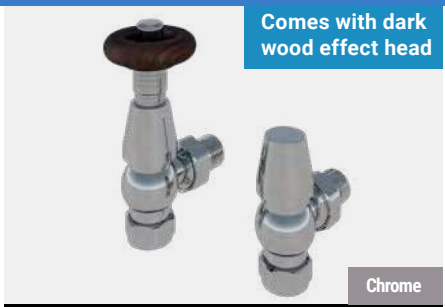

Angled TRV with Lockshield 15mm (pair)

Code	£ Ex VAT	£ Inc VAT
54.0008	90.00	**108.00**

Angled TRV with Lockshield 15mm (pair)

Code	£ Ex VAT	£ Inc VAT
54.0009	97.00	**116.40**

Angled TRV with Lockshield 15mm (pair)

Code	£ Ex VAT	£ Inc VAT
54.0032	93.00	**111.60**

Angled TRV with Lockshield 15mm (pair)

Code	£ Ex VAT	£ Inc VAT
54.0033	93.00	**111.60**

Angled TRV with Lockshield 15mm (pair)

Code	£ Ex VAT	£ Inc VAT
54.0034	93.00	**111.60**

TRADITIONAL CORNER TRV

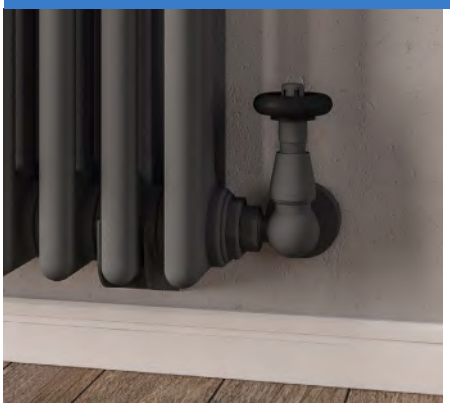

Corner TRV with Lockshield 15mm (pair)

Code	£ Ex VAT	£ Inc VAT
54.0010	113.00	**135.60**

Corner TRV with Lockshield 15mm (pair)

Code	£ Ex VAT	£ Inc VAT
54.0011	116.00	**139.20**

Corner TRV with Lockshield 15mm (pair)

Code	£ Ex VAT	£ Inc VAT
54.0035	114.00	**136.80**

Corner TRV with Lockshield 15mm (pair)

Code	£ Ex VAT	£ Inc VAT
54.0036	114.00	**136.80**

Corner TRV with Lockshield 15mm (pair)

Code	£ Ex VAT	£ Inc VAT
54.0037	114.00	**136.80**

FEATURES

- Approved to EN 1074-2:2000
- All valves are 15mm models
- Produced to GB/T 19001-2016 and ISO 9001:2015
- Not bi-directional, TRV head must be fitted to flow side.
- 2 Year warranty*

*With conditions

Thermostatic Valves

STRAIGHT TRV

Straight TRV with Lockshield 15mm (pair)

Code	£ Ex VAT	£ Inc VAT
12.050	10.00	**12.00**

While Stocks Last.

Straight TRV with Lockshield 15mm (pair)

Code	£ Ex VAT	£ Inc VAT
41.3038	19.00	**22.80**

While Stocks Last.

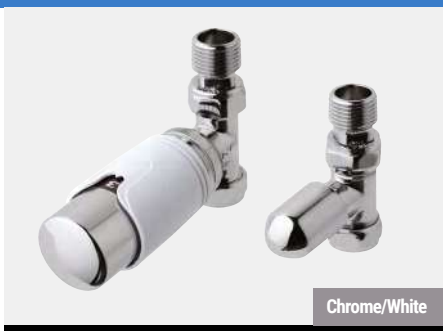

15mm TRV & Lockshield

Code	£ Ex VAT	£ Inc VAT
12.048	44.00	**52.80**

15mm TRV & Lockshield - Chrome

Code	£ Ex VAT	£ Inc VAT
12.043	54.00	**64.80**

15mm TRV & Lockshield

Code	£ Ex VAT	£ Inc VAT
12.033	60.00	**72.00**

15mm TRV & Lockshield

Code	£ Ex VAT	£ Inc VAT
41.3035	69.00	**82.80**

15mm TRV & Lockshield

Code	£ Ex VAT	£ Inc VAT
41.3020	50.00	**60.00**

15mm TRV & Lockshield

Code	£ Ex VAT	£ Inc VAT
41.3026	60.00	**72.00**

15mm TRV & Lockshield

Code	£ Ex VAT	£ Inc VAT
41.3028	60.00	**72.00**

15mm TRV & Lockshield

Code	£ Ex VAT	£ Inc VAT
41.3021	50.00	**60.00**

15mm TRV & Lockshield

Code	£ Ex VAT	£ Inc VAT
41.3022	50.00	**60.00**

FEATURES (STRAIGHT)

- 15mm straight models
- Approved to EN215
- Produced to ISO 9001: - 2008
- Energy saving - lower fuel bills
- Controls individual radiators to allow varying comfort levels throughout the home
- Reversible tail piece facilitates vertical or horizontal installation
- 2 Year warranty with conditions

TECHNICAL INFORMATION

(Same as Thermostatic Angled version)

All straight TRV's are BI-DIRECTIONAL

Thermostatic Valves

ANGLED TRV

Angled TRV with Lockshield 15mm (pair)

Code	£ Ex VAT	£ Inc VAT
41.3039	19.00	**22.80**

While Stocks Last.

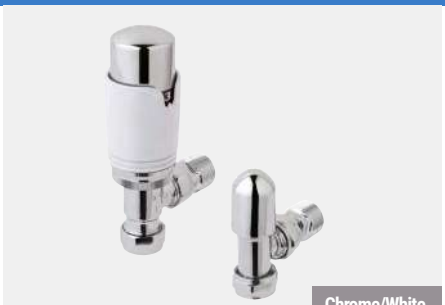

15mm TRV & Lockshield

Code	£ Ex VAT	£ Inc VAT
12.047	44.00	**52.80**

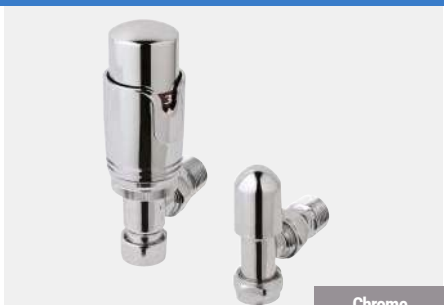

15mm TRV & Lockshield

Code	£ Ex VAT	£ Inc VAT
12.041	54.00	**64.80**

15mm TRV & Lockshield

Code	£ Ex VAT	£ Inc VAT
12.031	60.00	**72.00**

15mm TRV & Lockshield

Code	£ Ex VAT	£ Inc VAT
41.3036	69.00	**82.80**

15mm TRV & Lockshield

Code	£ Ex VAT	£ Inc VAT
41.3023	47.00	**56.40**

15mm TRV & Lockshield

Code	£ Ex VAT	£ Inc VAT
41.3027	56.00	**67.20**

15mm TRV & Lockshield

Code	£ Ex VAT	£ Inc VAT
41.3029	56.00	**67.20**

15mm TRV & Lockshield

Code	£ Ex VAT	£ Inc VAT
41.3024	47.00	**56.40**

15mm TRV & Lockshield

Code	£ Ex VAT	£ Inc VAT
41.3025	47.00	**56.40**

FEATURES (ANGLED)

- 15mm straight models
- Approved to EN215
- Produced to ISO 9001: - 2008
- Energy saving - lower fuel bills
- Controls individual radiators to allow varying comfort levels throughout the home
- Reversible tail piece facilitates vertical or horizontal installation
- Luxury gloss white/chrome, matt white, matt grey, matt cappuccino, matt black, brushed nickel, brushed brass and chrome finishes
- 2 Year warranty with conditions

TECHNICAL INFORMATION

On all TRV's, due to different materials used, there can be a slight difference between the parts colours. The numbers on the TRV heads do not represent specific room temperatures as the temperature at which the valve operates depends on the water temperature flowing through the radiator, airflow around the head of the TRV, the room size and any heat loss in that space through walls, windows and floors.

All angled TRV's are BI-DIRECTIONAL

Thermostatic Valves

CORNER TRV

Corner TRV with Lockshield 15mm (pair)

Code	£ Ex VAT	£ Inc VAT
41.3040	27.00	**32.40**

While Stocks Last.

15mm TRV & Lockshield

Code	£ Ex VAT	£ Inc VAT
12.049	44.00	**52.80**

15mm TRV & Lockshield - Chrome

Code	£ Ex VAT	£ Inc VAT
12.045	54.00	**64.80**

15mm TRV & Lockshield

Code	£ Ex VAT	£ Inc VAT
12.061	62.00	**74.40**

15mm TRV & Lockshield

Code	£ Ex VAT	£ Inc VAT
41.3037	80.00	**96.00**

15mm TRV & Lockshield

Code	£ Ex VAT	£ Inc VAT
12.053	76.00	**91.20**

15mm TRV & Lockshield

Code	£ Ex VAT	£ Inc VAT
12.054	76.00	**91.20**

15mm TRV & Lockshield

Code	£ Ex VAT	£ Inc VAT
12.055	80.00	**96.00**

15mm TRV & Lockshield

Code	£ Ex VAT	£ Inc VAT
12.056	76.00	**91.20**

15mm TRV & Lockshield

Code	£ Ex VAT	£ Inc VAT
12.057	76.00	**91.20**

FEATURES (STRAIGHT)

- 15mm straight models
- Approved to EN215
- Produced to ISO 9001: - 2008
- Energy saving - lower fuel bills
- Controls individual radiators to allow varying comfort levels throughout the home
- Reversible tail piece facilitates vertical or horizontal installation
- Luxury gloss white/chrome, matt white, matt grey, matt cappuccino, matt black, brushed nickel, brushed brass and chrome finishes
- 2 Year warranty with conditions

TECHNICAL INFORMATION

On all TRV's, due to different materials used, there can be a slight difference between the parts colours. The numbers on the TRV heads do not represent specific room temperatures as the temperature at which the valve operates depends on the water temperature flowing through the radiator, airflow around the head of the TRV, the room size and any heat loss in that space through walls, windows and floors.

Corner TRV's are **not** compatible with 91 code Addington radiators.

The Corner TRV can only be fitted RH if fitting on bottom connection or LH if fitting on side connection.

Thermostatic Valves

BLACK GOLD TRV

15mm TRV & Lockshield - Straight

Code	£ Ex VAT	£ Inc VAT
12.075	69.00	**82.80**

15mm TRV & Lockshield - Angled

Code	£ Ex VAT	£ Inc VAT
12.076	69.00	**82.80**

15mm TRV & Lockshield - Corner

Code	£ Ex VAT	£ Inc VAT
12.077	80.00	**96.00**

BRUSHED GUNMETAL TRV

15mm TRV & Lockshield - Straight

Code	£ Ex VAT	£ Inc VAT
12.078	69.00	**82.80**

15mm TRV & Lockshield - Angled

Code	£ Ex VAT	£ Inc VAT
12.079	69.00	**82.80**

15mm TRV & Lockshield - Corner

Code	£ Ex VAT	£ Inc VAT
12.080	80.00	**96.00**

BRUSHED BRONZE TRV

NEW

15mm TRV & Lockshield - Straight

Code	£ Ex VAT	£ Inc VAT
12.084	69.00	**82.80**

NEW

15mm TRV & Lockshield - Angled

Code	£ Ex VAT	£ Inc VAT
12.085	69.00	**82.80**

NEW

15mm TRV & Lockshield - Corner

Code	£ Ex VAT	£ Inc VAT
12.086	80.00	**96.00**

• NEW COLOUR HERE •

Manual Valves

BLACK GOLD MANUAL VALVES

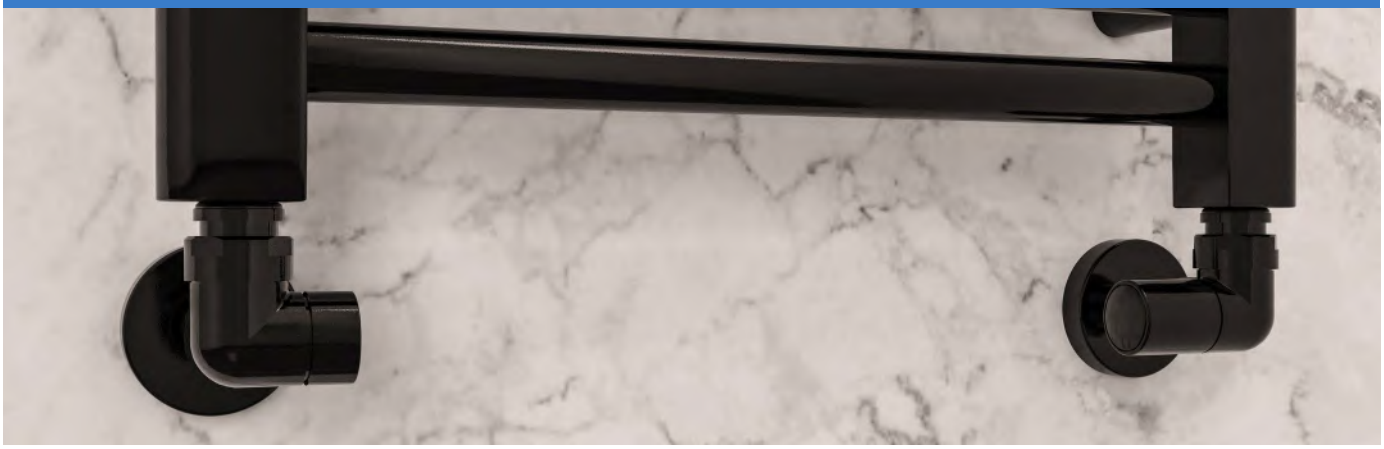

Radiator Valve (Pair) - Straight

Code	£ Ex VAT	£ Inc VAT
12.069	49.00	**58.80**

Radiator Valve (Pair) - Angled

Code	£ Ex VAT	£ Inc VAT
12.070	51.00	**61.20**

Radiator Valve (Pair) - Corner

Code	£ Ex VAT	£ Inc VAT
12.071	54.00	**64.80**

BRUSHED GUNMETAL MANUAL VALVES

Radiator Valve (Pair) - Straight

Code	£ Ex VAT	£ Inc VAT
12.072	49.00	**58.80**

Radiator Valve (Pair) - Angled

Code	£ Ex VAT	£ Inc VAT
12.073	51.00	**61.20**

Radiator Valve (Pair) - Corner

Code	£ Ex VAT	£ Inc VAT
12.074	54.00	**64.80**

BRUSHED BRONZE MANUAL VALVES

NEW

Radiator Valve (Pair) - Straight

Code	£ Ex VAT	£ Inc VAT
12.081	49.00	**58.80**

NEW

Radiator Valve (Pair) - Angled

Code	£ Ex VAT	£ Inc VAT
12.082	51.00	**61.20**

NEW

Radiator Valve (Pair) - Corner

Code	£ Ex VAT	£ Inc VAT
12.083	54.00	**64.80**

Manual Valves

ROUND STRAIGHT MANUAL VALVES

Chrome

Straight Radiator Valves (pair)

Code	£ Ex VAT	£ Inc VAT
54.0038	35.00	**42.00**

Brushed Nickel

Straight Radiator Valves (pair)

Code	£ Ex VAT	£ Inc VAT
54.0068	44.00	**52.80**

Brushed Brass

Straight Radiator Valves (pair)

Code	£ Ex VAT	£ Inc VAT
54.0042	41.00	**49.20**

Matt White

Straight Radiator Valves (pair)

Code	£ Ex VAT	£ Inc VAT
54.0039	39.00	**46.80**

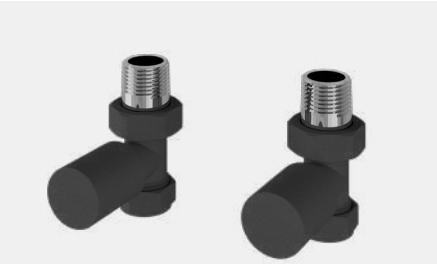

Matt Anthracite

Straight Radiator Valves (pair)

Code	£ Ex VAT	£ Inc VAT
54.0040	39.00	**46.80**

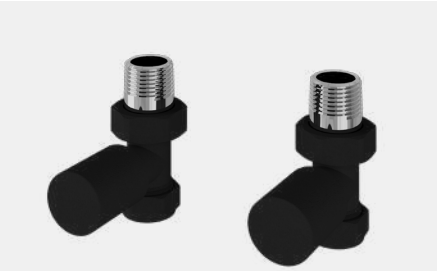

Matt Black

Straight Radiator Valves (pair)

Code	£ Ex VAT	£ Inc VAT
54.0041	39.00	**46.80**

ROUND ANGLED MANUAL VALVES

Chrome

Angled Radiator Valves (pair)

Code	£ Ex VAT	£ Inc VAT
54.0043	34.00	**40.80**

Chrome

Angled Crosshead Radiator Valves (pair)

Code	£ Ex VAT	£ Inc VAT
54.0025	46.00	**55.20**

Brushed Nickel

Angled Radiator Valves (pair)

Code	£ Ex VAT	£ Inc VAT
54.0069	45.00	**54.00**

Brushed Brass

Angled Radiator Valves (pair)

Code	£ Ex VAT	£ Inc VAT
54.0047	39.00	**46.80**

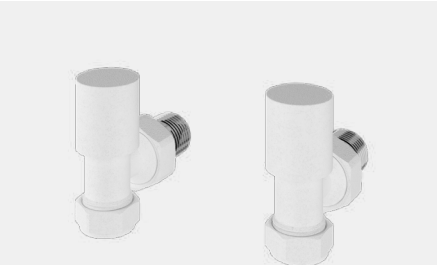

Matt White

Angled Radiator Valves (pair)

Code	£ Ex VAT	£ Inc VAT
54.0044	38.00	**45.60**

Matt Anthracite

Angled Radiator Valves (pair)

Code	£ Ex VAT	£ Inc VAT
54.0045	38.00	**45.60**

Manual Valves

ROUND ANGLED VALVES

Matt Black

Angled Radiator Valves (pair)

Code	£ Ex VAT	£ Inc VAT
54.0046	38.00	**45.60**

ROUND CORNER MANUAL VALVES

Chrome

Corner Radiator Valves (pair)

Code	£ Ex VAT	£ Inc VAT
54.0048	42.00	**50.40**

Brushed Nickel

Corner Radiator Valves (pair)

Code	£ Ex VAT	£ Inc VAT
54.0070	51.00	**61.20**

Brushed Brass

Corner Radiator Valves (pair)

Code	£ Ex VAT	£ Inc VAT
54.0052	49.00	**58.80**

Matt White

Corner Radiator Valves (pair)

Code	£ Ex VAT	£ Inc VAT
54.0049	47.00	**56.40**

Matt Anthracite

Corner Radiator Valves (pair)

Code	£ Ex VAT	£ Inc VAT
54.0050	47.00	**56.40**

Matt Black

Corner Radiator Valves (pair)

Code	£ Ex VAT	£ Inc VAT
54.0051	47.00	**56.40**

SQUARE STRAIGHT MANUAL VALVES

Chrome

Square Straight Radiator Valves (pair)

Code	£ Ex VAT	£ Inc VAT
41.3002	73.00	**87.60**

Chrome

Square Straight Radiator Valves (pair)

Code	£ Ex VAT	£ Inc VAT
54.0053	66.00	**79.20**

While Stocks Last

Brushed Nickel

Square Straight Radiator Valves (pair)

Code	£ Ex VAT	£ Inc VAT
12.039	27.00	**32.40**

Matt White

Square Straight Radiator Valves (pair)

Code	£ Ex VAT	£ Inc VAT
54.0054	70.00	**84.00**

Matt Anthracite

Square Straight Radiator Valves (pair)

Code	£ Ex VAT	£ Inc VAT
54.0055	70.00	**84.00**

Manual Valves

SQUARE STRAIGHT VALVES

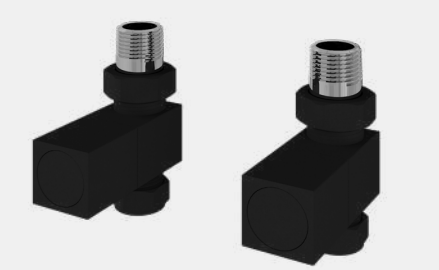

Matt Black

Square Straight Radiator Valves (pair)

Code	£ Ex VAT	£ Inc VAT
54.0056	70.00	**84.00**

SQUARE ANGLED VALVES

Chrome

Square Angled Radiator Valves (pair)

Code	£ Ex VAT	£ Inc VAT
41.3001	70.00	**84.00**

Chrome

Square Angled Radiator Valves (pair)

Code	£ Ex VAT	£ Inc VAT
54.0057	66.00	**79.20**

While Stocks Last

Brushed Nickel

Square Angled Radiator Valves (pair)

Code	£ Ex VAT	£ Inc VAT
12.037	27.00	**32.40**

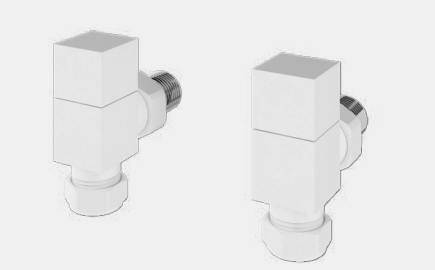

Matt White

Square Angled Radiator Valves (pair)

Code	£ Ex VAT	£ Inc VAT
54.0058	70.00	**84.00**

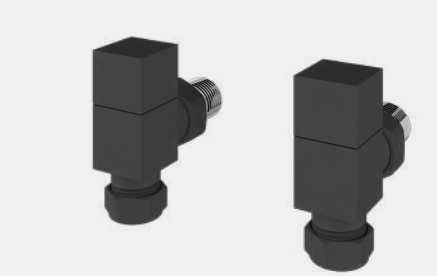

Matt Anthracite

Square Angled Radiator Valves (pair)

Code	£ Ex VAT	£ Inc VAT
54.0059	70.00	**84.00**

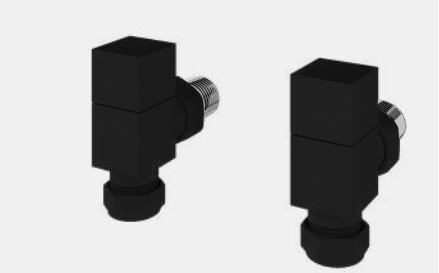

Matt Black

Square Angled Radiator Valves (pair)

Code	£ Ex VAT	£ Inc VAT
54.0060	70.00	**84.00**

SQUARE CORNER VALVES

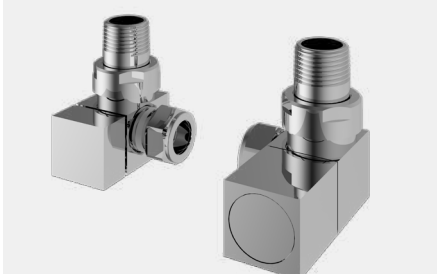

Chrome

Square Corner Radiator Valves (pair)

Code	£ Ex VAT	£ Inc VAT
54.0061	67.00	**80.40**

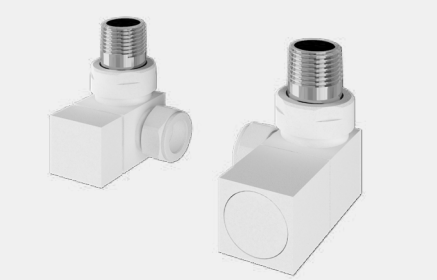

Matt White

Square Corner Radiator Valves (pair)

Code	£ Ex VAT	£ Inc VAT
54.0062	71.00	**85.20**

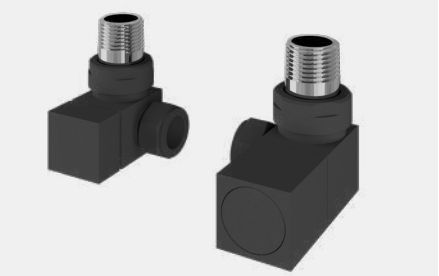

Matt Anthracite

Square Corner Radiator Valves (pair)

Code	£ Ex VAT	£ Inc VAT
54.0063	71.00	**85.20**

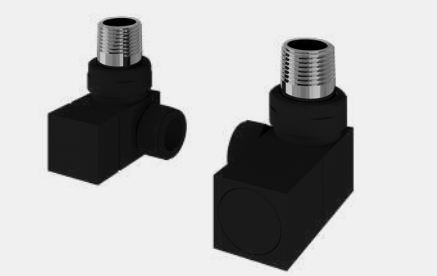

Matt Black

Square Corner Radiator Valves (pair)

Code	£ Ex VAT	£ Inc VAT
54.0064	71.00	**85.20**

FEATURES

- 15mm compression fittings
- Approved to EN215
- Produced to ISO 9001:2008
- Solid brass construction
- Compatible with radiators & towel rails
- Standard 1/2" BSP threads
- Comes in pair
- 2 Year Warranty*

*With conditions

Pipe Shrouds & Collar Kits

Page 354-355

Manual Valves

ROUND STRAIGHT VALVES

Chrome

Round Straight Radiator Valves (pair)

Code	£ Ex VAT	£ Inc VAT
41.3005	45.00	**54.00**

Chrome

Round Straight Radiator Valves (pair)

Code	£ Ex VAT	£ Inc VAT
41.3008	46.00	**55.20**

Brushed Nickel

Round Straight Radiator Valves (pair)

Code	£ Ex VAT	£ Inc VAT
12.016	52.00	**62.40**

Brushed Brass

Round Straight Radiator Valves (pair)

Code	£ Ex VAT	£ Inc VAT
41.0609	49.00	**58.80**

Matt White

Round Straight Radiator Valves (pair)

Code	£ Ex VAT	£ Inc VAT
41.3013	46.00	**55.20**

Matt Anthracite

Round Straight Radiator Valves (pair)

Code	£ Ex VAT	£ Inc VAT
41.3016	45.00	**54.00**

Matt Black

Round Straight Radiator Valves (pair)

Code	£ Ex VAT	£ Inc VAT
41.3014	46.00	**55.20**

ROUND ANGLED VALVES

Chrome

Round Angled Radiator Valves (pair)

Code	£ Ex VAT	£ Inc VAT
41.3004	44.00	**52.80**

Chrome

Round Angled Radiator Valves (pair)

Code	£ Ex VAT	£ Inc VAT
41.3007	47.00	**56.40**

Brushed Nickel

Round Angled Radiator Valves (pair)

Code	£ Ex VAT	£ Inc VAT
12.017	54.00	**64.80**

Brushed Brass

Round Angled Radiator Valves (pair)

Code	£ Ex VAT	£ Inc VAT
41.0610	51.00	**61.20**

FEATURES
- 15mm compression fittings
- Approved to EN215
- Produced to ISO 9001:2008
- Solid brass construction
- Compatible with radiators & towel rails
- Standard 1/2" BSP threads
- Comes in pair
- 2 Year Warranty*

*With conditions

Pipe Shrouds & Collar Kits
Page 354-355

Manual Valves

ROUND ANGLED VALVES

Matt White

Round Angled Radiator Valves (pair)

Code	£ Ex VAT	£ Inc VAT
41.3011	45.00	**54.00**

Matt Anthracite

Round Angled Radiator Valves (pair)

Code	£ Ex VAT	£ Inc VAT
41.3015	46.00	**55.20**

Matt Black

Round Angled Radiator Valves (pair)

Code	£ Ex VAT	£ Inc VAT
41.3012	45.00	**54.00**

ROUND CORNER VALVES

Chrome

Round Corner Radiator Valves (pair)

Code	£ Ex VAT	£ Inc VAT
41.3006	50.00	**60.00**

Brushed Nickel

Round Corner Radiator Valves (pair)

Code	£ Ex VAT	£ Inc VAT
12.018	57.00	**68.40**

Brushed Brass

Round Corner Radiator Valves (pair)

Code	£ Ex VAT	£ Inc VAT
41.0611	54.00	**64.80**

Matt White

Round Corner Radiator Valves (pair)

Code	£ Ex VAT	£ Inc VAT
41.3017	52.00	**62.40**

Matt Anthracite

Round Corner Radiator Valves (pair)

Code	£ Ex VAT	£ Inc VAT
41.3018	52.00	**62.40**

Matt Black

Round Corner Radiator Valves (pair)

Code	£ Ex VAT	£ Inc VAT
41.3019	52.00	**62.40**

SQUARE MANUAL VALVES

Chrome

Straight Square Radiator Valves (pair)

Code	£ Ex VAT	£ Inc VAT
12.038	97.00	**116.40**

Chrome

Angled Square Radiator Valves (pair)

Code	£ Ex VAT	£ Inc VAT
12.036	107.00	**128.40**

Chrome

Corner Square Radiator Valves (pair)

Code	£ Ex VAT	£ Inc VAT
41.3010	90.00	**108.00**

Traditional Manual Valves

TRADITIONAL VALVES

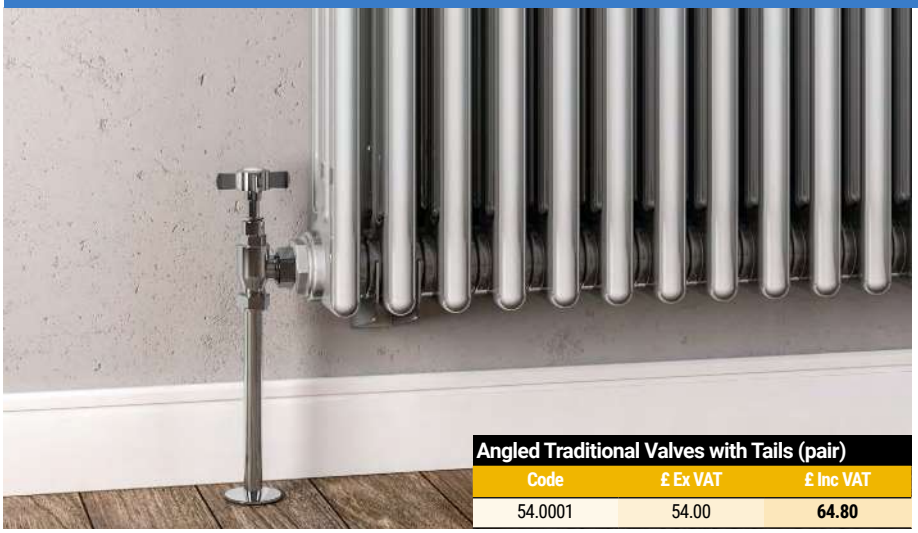

Angled Traditional Valves with Tails (pair)

Code	£ Ex VAT	£ Inc VAT
54.0001	54.00	**64.80**

TRADITIONAL MANUAL VALVES

Pair of Radiator Valves + Tails Chrome

Code	£ Ex VAT	£ Inc VAT
41.3009	79.00	**94.80**

Pair of Radiator Valves + Tails Gloss White

Code	£ Ex VAT	£ Inc VAT
41.0729	77.00	**92.40**

Pair of Radiator Valves + Tails Matt Anthracite

Code	£ Ex VAT	£ Inc VAT
41.0730	77.00	**92.40**

Pair of Radiator Valves + Tails Matt Black

Code	£ Ex VAT	£ Inc VAT
41.0731	77.00	**92.40**

Pair of Radiator Valves + Tails Brushed Brass

Code	£ Ex VAT	£ Inc VAT
41.0710	89.00	**106.80**

TRADITIONAL VALVE SHROUDS FEATURES
- Material : High Quality Brass
- Shroud length : 150mm, can be cut to desired length

Drain Off Valve

Drain Off Valve

Description	Colour	Code	£ Ex VAT	£ Inc VAT
15mm Lockshield with Drain Valve	Chrome	12.052	15.00	**18.00**

FEATURES
- Can be used to drain off radiators.
- Chrome plated brass body, comes with white cover cap.

Traditional Manual Valves

CORNER DUAL FUEL TRV

Chrome

Dual Fuel TRV & Lockshield Valve 15mm

Code	£ Ex VAT	£ Inc VAT
12.058	78.00	**93.60**

Brushed Brass

Dual Fuel TRV & Lockshield Valve 15mm

Code	£ Ex VAT	£ Inc VAT
41.0608	81.00	**97.20**

Matt White

Dual Fuel TRV & Lockshield Valve 15mm

Code	£ Ex VAT	£ Inc VAT
54.0026	74.00	**88.80**

Matt Anthracite

Dual Fuel TRV & Lockshield Valve 15mm

Code	£ Ex VAT	£ Inc VAT
54.0027	74.00	**88.80**

Matt Black

Dual Fuel TRV & Lockshield Valve 15mm

Code	£ Ex VAT	£ Inc VAT
54.0028	74.00	**88.80**

FEATURES
- Approved to EN215
- Produced to ISO 9001:2008
- Integrated T Piece
- Only fitted with Type A, A+ & B Elements
- Element entry inlet only on flow side
- Brass construction
- 2 Year Warranty*

*With conditions

Dual Fuel TRV's are **not** compatible with 91 code Addington & 62 code Addington II Type 10 radiators and Type 10 towel rails.

CORNER DUAL FUEL MANUAL VALVES

Chrome

Corner Manual Dual Fuel Radiator Valves (Pair)

Code	£ Ex VAT	£ Inc VAT
12.062	71.00	**85.20**

Brushed Brass

Corner Manual Dual Fuel Radiator Valves (Pair)

Code	£ Ex VAT	£ Inc VAT
12.063	73.00	**87.60**

Matt White

Corner Manual Dual Fuel Radiator Valves (Pair)

Code	£ Ex VAT	£ Inc VAT
12.064	65.00	**78.00**

Matt Anthracite

Corner Manual Dual Fuel Radiator Valves (Pair)

Code	£ Ex VAT	£ Inc VAT
12.065	65.00	**78.00**

Matt Black

Corner Manual Dual Fuel Radiator Valves (Pair)

Code	£ Ex VAT	£ Inc VAT
12.066	65.00	**78.00**

FEATURES
- Approved to EN215
- Produced to ISO 9001:2008
- Integrated T Piece
- Only fitted with Type A, A+ & B Elements
- Element entry inlets from both sides
- Brass construction
- 2 Year Warranty*

*With conditions

Dual Fuel Manual Valves are **not** compatible with 91 code Addington & 62 code Addington II Type 10 radiators and Type 10 towel rails.

• NEW COLOUR HERE •

Accessories

Pipe Shrouds and Collar Kits (Slide On)

Pipe Shrouds and Collar Kits - Slide On			
Description	Code	£ Ex VAT	£ Inc VAT
15mm Pipe Shroud & Collar Kit Gloss White	41.0597	23.00	**27.60**
15mm Pipe Shroud & Collar Kit Matt White	41.0598	23.00	**27.60**
15mm Pipe Shroud & Collar Kit Matt Grey	41.0599	23.00	**27.60**
15mm Pipe Shroud & Collar Kit Matt Cappuccino	41.0600	23.00	**27.60**
15mm Pipe Shroud & Collar Kit Matt Anthracite	41.0601	23.00	**27.60**
15mm Pipe Shroud & Collar Kit Matt Black	41.0602	23.00	**27.60**
15mm Pipe Shroud & Collar Kit Chrome	41.0603	21.00	**25.20**
15mm Pipe Shroud & Collar Kit Brushed Brass	41.0604	29.00	**34.80**
15mm Pipe Shroud & Collar Kit Satin Nickel	41.0605	29.00	**34.80**
15mm Pipe Shroud & Collar Kit Black Gold	41.0988	29.00	**34.80**
15mm Pipe Shroud & Collar Kit Brushed Gunmetal	41.0989	29.00	**34.80**
15mm Pipe Shroud & Collar Kit Brushed Bronze	41.1220	29.00	**34.80**

FEATURES
- Manufactured from high quality brass
- Suitable for 15mm pipes, must be fitted together with radiator installation
- Each kit includes two pipe shrouds and two collars
- Shroud length 200mm., can be cut to desired length

41.0598 - Matt White

41.0603 - Chrome

41.0604 - Brushed Brass

41.0597

41.0598

41.0601

41.0602

41.0603

41.0604

41.0605

41.0988

41.0989

41.0605

41.0988

41.1220

Accessories

Pipe Shrouds and Collar Kits (Clip On)

Pipe Shrouds and Collar Kits - Clip On			
Description	Code	£ Ex VAT	£ Inc VAT
15mm Pipe Shroud & Collar Kit White	92.0001	14.00	**16.80**
15mm Pipe Shroud & Collar Kit Chrome	92.0002	21.00	**25.20**
15mm Pipe Shroud & Collar Kit Anthracite	92.0003	15.00	**18.00**
15mm Pipe Shroud & Collar Kit Black	92.0004	15.00	**18.00**

FEATURES
- Manufactured from high grade polypropylene
- Suitable for 15mm pipes, easy-fit after radiator installation
- Available in white, anthracite, black and chrome
- Each kit includes two pipe shrouds and two collars
- Shroud length 200mm., can be cut to desired length
- Easy push-fit installation

Rivassa & Imperia - Towel Hangers

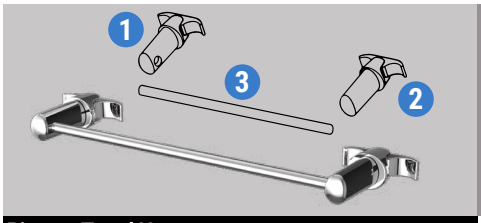

Towel hanger comes in three unassembled pieces. Please cut 600mm bar to required column-to-column length.

Rivassa Towel Hanger				
Size	Colour	Code	£ Ex VAT	£ Inc VAT
600mm	Chrome	16.158	121.00	**145.20**
600mm	White	16.157	84.00	**100.80**

Can be fitted after installation!

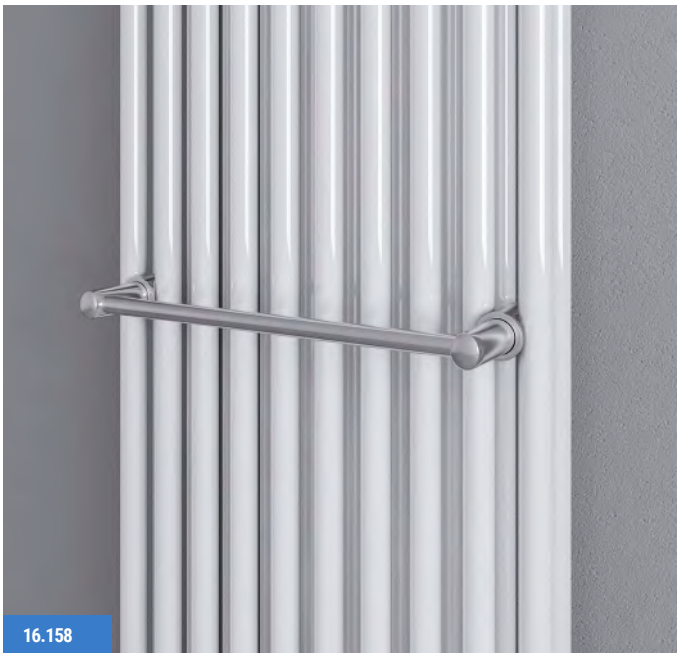

Rivassa & Imperia - Robe Hooks

Robe Hook- Chrome			
Details	Code	£ Ex VAT	£ Inc VAT
Single Hook	16.006	20.00	**24.00**

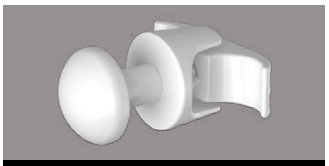

Robe Hook- White			
Details	Code	£ Ex VAT	£ Inc VAT
Single Hook	16.005	17.00	**20.40**

Can be fitted after installation!

Towel Rail - Towel Hangers

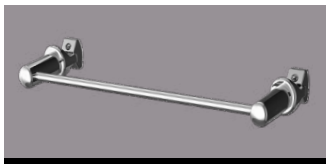

Towel Hanger - Chrome			
Size	Code	£ Ex VAT	£ Inc VAT
210mm	16.002	67.00	**80.40**
310mm	16.004	68.00	**81.60**
360mm	16.352	70.00	**84.00**
470mm	16.350	72.00	**86.40**
600mm	16.351	74.00	**88.80**

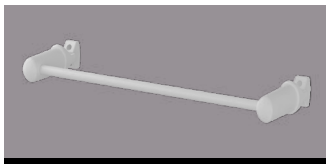

Towel Hanger - White			
Size	Code	£ Ex VAT	£ Inc VAT
210mm	16.001	50.00	**60.00**
310mm	16.003	53.00	**63.60**
360mm	16.152	56.00	**67.20**
470mm	16.150	60.00	**72.00**
600mm	16.151	62.00	**74.40**

Can be fitted after installation! Cannot be cut down.

Towel Rail - Robe Hooks

Robe Hook- Chrome			
Details	Code	£ Ex VAT	£ Inc VAT
Hook Pair	16.500	45.00	**54.00**

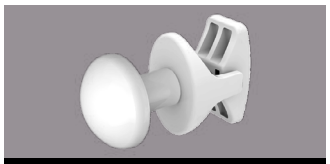

Robe Hook- White			
Details	Code	£ Ex VAT	£ Inc VAT
Hook Pair	16.600	37.00	**44.40**

Can be fitted after installation!

Accessories

Multi-Rail Towel Hangers

Multi-Rail Hanger - Gloss White

Size	Code	£ Ex VAT	£ Inc VAT
300mm	101.0010	46.00	**55.20**
400mm	101.0012	47.00	**56.40**
450mm	101.0016	52.00	**62.40**
500mm	101.0018	54.00	**64.80**
600mm	101.0022	60.00	**72.00**
750mm	101.0026	63.00	**75.60**

Multi-Rail Hanger - Chrome

Size	Code	£ Ex VAT	£ Inc VAT
300mm	101.0011	62.00	**74.40**
400mm	101.0015	63.00	**75.60**
450mm	101.0017	70.00	**84.00**
500mm	101.0021	78.00	**93.60**
600mm	101.0025	83.00	**99.60**
750mm	101.0027	88.00	**105.60**

Must be fitted before installation

Multi-Rail Hanger - Matt Anthracite

Size	Code	£ Ex VAT	£ Inc VAT
400mm	101.0014	47.00	**56.40**
500mm	101.0020	54.00	**64.80**
600mm	101.0024	60.00	**72.00**

Multi-Rail Hanger - Matt White

Size	Code	£ Ex VAT	£ Inc VAT
400mm	101.0013	47.00	**56.40**
500mm	101.0019	54.00	**64.80**
600mm	101.0023	60.00	**72.00**

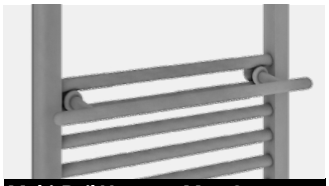

Multi-Rail Hanger - Matt Grey

Size	Code	£ Ex VAT	£ Inc VAT
400mm	101.0111	47.00	**56.40**
500mm	101.0112	54.00	**64.80**
600mm	101.0113	60.00	**72.00**

Multi-Rail Hanger - Matt Black

Size	Code	£ Ex VAT	£ Inc VAT
400mm	101.0061	47.00	**56.40**
500mm	101.0062	54.00	**64.80**
600mm	101.0063	60.00	**72.00**

Compatible Radiators

Wendover Straight	**All Models**	Wingrave Straight	**All Models**	Biava Dry Element	**All Models**	Westward	**All Models**
Biava Tube on Tube	**All Models**	Biava Multirail	**All Models**	Biava Multirail Hidden Vent	**All Models**		

Accessories

Round Vent Caps

Round Vent Caps - White

Description	Code	£ Ex VAT	£ Inc VAT
Round Vent Cap (pair)	101.0001	17.00	**20.40**

Round Vent Caps - Grey

Description	Code	£ Ex VAT	£ Inc VAT
Round Vent Cap (pair)	101.0002	17.00	**20.40**

Round Vent Caps - Cappuccino

Description	Code	£ Ex VAT	£ Inc VAT
Round Vent Cap (pair)	101.0003	17.00	**20.40**

Round Vent Caps - Anthracite

Description	Code	£ Ex VAT	£ Inc VAT
Round Vent Cap (pair)	101.0004	17.00	**20.40**

Round Vent Caps - Black

Description	Code	£ Ex VAT	£ Inc VAT
Round Vent Cap (pair)	101.0005	17.00	**20.40**

Round Vent Caps - Chrome

Description	Code	£ Ex VAT	£ Inc VAT
Round Vent Cap (pair)	101.0006	17.00	**20.40**

Compatible Radiators

Wingrave	Biava Square	Marlow E-Style	Deddington Towel Rail	Witney
Wendover	Leonardo	Rubano	Tordino	Rivassa 2 - 3 - 4 Column
Tuscan	Hurley	Rowsham	Corinium Round	Imperia 2 - 3 - 4 - 6 Column
Biava Multirail	Helmsley	Tunstall	Berkeley	Imperia Mu;ltirail 2 Column
Biava Multirail HV	Staverton Tube on Tube Straight	Tunstall Double	Preston	Corinium Round
Westward	Staverton	Tunstall Mirror	Charlton	Reinbach
Biava Round	Staverton Tube on Tube Curved	Addington II Type10	Withington	Warrington Type 10
Biava Tube on Tube	Mezzo Tondo	Addington II Type20	Malmesbury	Warrington Type 20
Launton	Pesaro	Deddington	Platani	
Haddenham	Marlow	Addington II Type10 Towel Rail	Fairford	
Tuscan Round	Tuscan Square	Addington Type20 Towel Rail	Burford	
Murano	Tuscan Square Multirail	Tuscan Round	Kelmscott	

D-Shape Vent Caps

D-Shape Vent Caps - White

Description	Code	£ Ex VAT	£ Inc VAT
D-Shape Vent Cap (pair)	101.0007	19.00	**22.80**

D-Shape Vent Caps - Anthracite

Description	Code	£ Ex VAT	£ Inc VAT
D-Shape Vent Cap (pair)	101.0008	19.00	**22.80**

D-Shape Vent Caps - Grey

Description	Code	£ Ex VAT	£ Inc VAT
D-Shape Vent Cap (pair)	101.0114	19.00	**22.80**

D-Shape Vent Caps - Chrome

Description	Code	£ Ex VAT	£ Inc VAT
D-Shape Vent Cap (pair)	101.0009	19.00	**22.80**

D-Shape Vent Caps - Black

Description	Code	£ Ex VAT	£ Inc VAT
D-Shape Vent Cap (pair)	101.0060	19.00	**22.80**

With Vent Caps 101.0009

Compatible Radiators

Wingrave	Westward	Defford	Santero	Rion Multirail

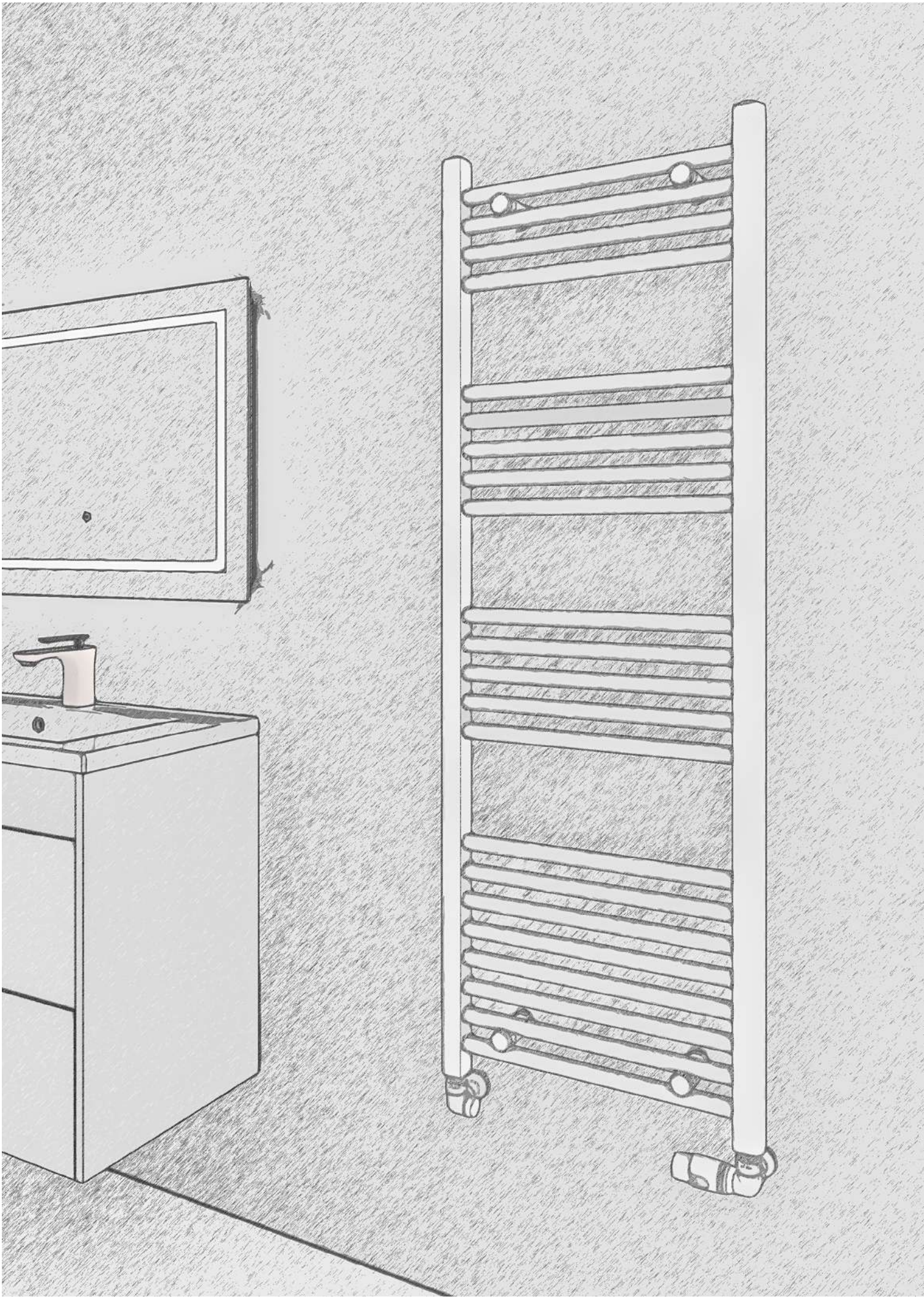

Technical Section

In this section you'll find the technical specifications for every single model / size within the Radiator Collection brochure.

Jump quickly from the model page, to the relevant technical page by using the 'Technical Table & Drawings' boxes.

Technical Tables & Drawings
Page 00-00

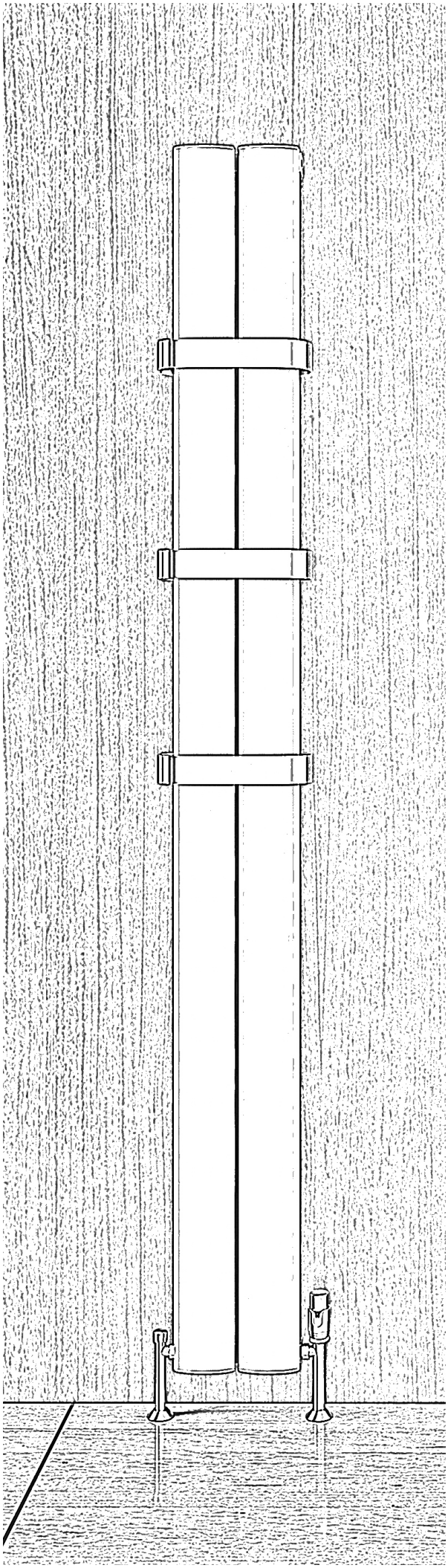

Technical Section Contents

The Multirail Range	360-371
The All Electric Range	372-375
The Stainless Steel Range	374-377
The Designer Range	376-417
The Aluminium Range	416-423
The Traditional Range	424-435

Technical Tables & Drawings

WENDOVER - THE MULTIRAIL RANGE

Wendover - Straight

Height H (mm)	Width W (mm)	Tappings C (mm)	Tappings from wall - A (mm)	Distance from wall - D (mm)	Tube Qty	Water Content L	Weight KG	Colour	▲T30 Watts	▲T50 Watts	Element Output	Element Type	Colour	▲T30 Watts	▲T50 Watts	Element Output	Element Type
360	400	350	75-95	90-110	7	1.36	2.38	Coloured	80	147	150W	B	Chrome	54	104	150W	B
600	300	250	75-95	90-110	10	1.81	3.08	Coloured	98	182	100W	A,A+,B,D,E,F,G	Chrome	67	128	100W	A,A+,B,D,E,F,G
600	400	350	75-95	90-110	10	2.13	3.55	Coloured	120	220	150W	A,A+,B,D,E,F,G	Chrome	83	156	100W	A,A+,B,D,E,F,G
600	500	450	75-95	90-110	10	2.45	4.01	Coloured	141	260	150W	A,A+,B,D,E,F,G	Chrome	98	185	100W	A,A+,B,D,E,F,G
600	600	550	75-95	90-110	10	2.77	4.48	Coloured	163	299	150W	A,A+,B,D,E,F,G	Chrome	113	213	150W	A,A+,B,D,E,F,G
600	750	700	75-95	90-110	10	3.25	5.18	Coloured	193	361	150W	A,A+,B,D,E,F,G	Chrome	134	258	150W	A,A+,B,D,E,F,G
600	1000	950	75-95	90-110	10	4.05	6.35	Coloured	248	460	300W	A,A+,B,D,E,F,G	Chrome	173	327	150W	A,A+,B,D,E,F,G
600	1200	1150	75-95	90-110	10	4.69	7.28	Coloured	291	541	300W	A,A+,B,D,E,F,G	Chrome	212	392	150W	A,A+,B,D,E,F,G
800	300	250	75-95	90-110	14	2.46	4.04	Coloured	99	181	150W	A,A+,B,D,E,F,G	Chrome	73	139	100W	A,A+,B,D,E,F,G
800	400	350	75-95	90-110	14	2.91	4.69	Coloured	152	281	150W	A,A+,B,D,E,F,G	Chrome	91	173	150W	A,A+,B,D,E,F,G
800	500	450	75-95	90-110	14	3.36	5.34	Coloured	180	332	150W	A,A+,B,D,E,F,G	Chrome	109	208	150W	A,A+,B,D,E,F,G
800	600	550	75-95	90-110	14	3.80	6.00	Coloured	204	386	150W	A,A+,B,D,E,F,G	Chrome	124	238	150W	A,A+,B,D,E,F,G
800	750	700	75-95	90-110	14	4.48	6.98	Coloured	250	461	300W	A,A+,B,D,E,F,G	Chrome	173	327	150W	A,A+,B,D,E,F,G
1000	300	250	75-95	90-110	16	2.97	4.78	Coloured	149	277	150W	A,A+,B,D,E,F,G	Chrome	103	198	150W	A,A+,B,D,E,F,G
1000	400	350	75-95	90-110	16	3.48	5.53	Coloured	184	343	150W	A,A+,B,D,E,F,G	Chrome	113*	216*	150W	A,A+,B,D,E,F,G
1000	500	450	75-95	90-110	16	3.99	6.27	Coloured	219	408	150W	A,A+,B,D,E,F,G	Chrome	132	256	150W	A,A+,B,D,E,F,G
1000	600	550	75-95	90-110	16	4.51	7.02	Coloured	254	472	300W	A,A+,B,D,E,F,G	Chrome	154	298	150W	A,A+,B,D,E,F,G
1000	750	700	75-95	90-110	16	5.28	8.14	Coloured	303	565	300W	A,A+,B,D,E,F,G	Chrome	208	396	300W	A,A+,B,D,E,F,G
1200	300	250	75-95	90-110	20	3.62	5.73	Coloured	176	331	150W	A,A+,B,D,E,F,G	Chrome	109	210	150W	A,A+,B,D,E,F,G
1200	400	350	75-95	90-110	20	4.26	6.67	Coloured	218	409	300W	A,A+,B,D,E,F,G	Chrome	136	262	150W	A,A+,B,D,E,F,G
1200	500	450	75-95	90-110	20	4.90	7.60	Coloured	264	497	300W	A,A+,B,D,E,F,G	Chrome	161	311	150W	A,A+,B,D,E,F,G
1200	600	550	75-95	90-110	20	5.54	8.54	Coloured	294*	560*	300W	A,A+,B,D,E,F,G	Chrome	205*	393*	300W	A,A+,B,D,E,F,G
1200	750	700	75-95	90-110	20	6.50	9.94	Coloured	363	680	450W	A,A+,B,D,E,F,G	Chrome	247	473	300W	A,A+,B,D,E,F,G
1400	300	250	75-95	90-110	22	4.09	5.87	Coloured	194	371	150W	A,A+,B,D,E,F,G	Chrome	128	249	150W	A,A+,B,D,E,F,G
1400	400	350	75-95	90-110	22	4.50	7.41	Coloured	245	467	300W	A,A+,B,D,E,F,G	Chrome	160	311	150W	A,A+,B,D,E,F,G
1400	500	450	75-95	90-110	22	5.50	9.10	Coloured	293	560	300W	A,A+,B,D,E,F,G	Chrome	190	369	150W	A,A+,B,D,E,F,G
1400	600	550	75-95	90-110	22	6.20	10.10	Coloured	340	649	300W	A,A+,B,D,E,F,G	Chrome	219	424	300W	A,A+,B,D,E,F,G
1400	750	700	75-95	90-110	22	7.20	12.30	Coloured	407	778	450W	A,A+,B,D,E,F,G	Chrome	260	504	300W	A,A+,B,D,E,F,G
1600	300	250	75-95	90-110	26	4.74	8.35	Coloured	237	444	300W	A,A+,B,D,E,F,G	Chrome	155	303	150W	A,A+,B,D,E,F,G
1600	400	350	75-95	90-110	26	5.61	8.65	Coloured	289	551	300W	A,A+,B,D,E,F,G	Chrome	186	363	300W	A,A+,B,D,E,F,G
1600	500	450	75-95	90-110	26	6.44	9.86	Coloured	346	657	450W	A,A+,B,D,E,F,G	Chrome	220	431	300W	A,A+,B,D,E,F,G
1600	600	550	75-95	90-110	26	7.28	11.08	Coloured	398	763	450W	A,A+,B,D,E,F,G	Chrome	240	453	300W	A,A+,B,D,E,F,G
1600	750	700	75-95	90-110	26	8.41	14.15	Coloured	491	915	600W	A,A+,B,D,E,F,G	Chrome	324	632	450W	A,A+,B,D,E,F,G
1800	300	250	75-95	90-110	30	5.38	9.28	Coloured	261	489	300W	A,A+,B,D,E,F,G	Chrome	181	353	150W	A,A+,B,D,E,F,G
1800	400	360	75-95	90-110	30	6.39	9.79	Coloured	326	615	300W	A,A+,B,D,E,F,G	Chrome	222	431	300W	A,A+,B,D,E,F,G
1800	500	450	75-95	90-110	30	7.35	11.19	Coloured	391	741	450W	A,A+,B,D,E,F,G	Chrome	262	510	300W	A,A+,B,D,E,F,G
1800	600	550	75-95	90-110	30	8.31	12.59	Coloured	459	868	600W	A,A+,B,D,E,F,G	Chrome	304	576	450W	A,A+,B,D,E,F,G
1800	750	700	75-95	90-110	30	9.62	15.96	Coloured	561	1060	600W	A,A+,B,D,E,F,G	Chrome	370	702	450W	A,A+,B,D,E,F,G

* Further heat output information available on eastbrooktrade.com **E&OA**

Watts to BTU conversion multiple is 3.41

Wendover Straight - PVD Finish

Height H (mm)	Width W (mm)	Tappings from wall - A (mm)	Distance from wall - D (mm)	▲T30 Watts	▲T50 Watts	Element Output	Element Type	Height H (mm)	Width W (mm)	Tappings from wall - A (mm)	Distance from wall - D (mm)	▲T30 Watts	▲T50 Watts	Element Output	Element Type
360	400	59-69	74-84	68	126	100W	A,A+,B	1200	400	59-69	74-84	157	301	150W	A, A+, B, D, E, F, G
600	300	59-69	74-84	80	149	100W	A,A+,B	1200	500	59-69	74-84	186	357	150W	A, A+, B, D, E, F, G
600	400	59-69	74-84	78	150	100W	A,A+,B,D,E,F,G	1200	600	59-69	74-84	216	414	300W	A, A+, B, D, E, F, G
600	500	59-69	74-84	93	178	100W	A,A+,B,D,E,F,G	1200	750	59-69	74-84	319	609	300W	A, A+, B, D, E, F, G
600	600	59-69	74-84	108	207	150W	A,A+,B,D,E,F,G	1400	300	59-69	74-84	173	334	150W	A, A+, B, D, E, F, G
600	750	59-69	74-84	172	321	150W	A,A+,B,D,E,F,G	1400	400	59-69	74-84	177	339	150W	A, A+, B, D, E, F, G
600	1000	59-69	74-84	218	407	150W	A,A+,B,D,E,F,G	1400	500	59-69	74-84	209	401	300W	A, A+, B, D, E, F, G
600	1200	59-69	74-84	254	474	150W	A,A+,B,D,E,F,G	1400	600	59-69	74-84	241	463	300W	A, A+, B, D, E, F, G
800	300	59-69	74-84	102	192	100W	A,A+,B,D,E,F,G	1400	750	59-69	74-84	372	717	300W	A, A+, B, D, E, F, G
800	400	59-69	74-84	108	207	150W	A,A+,B,D,E,F,G	1600	300	59-69	74-84	200	388	150W	A, A+, B, D, E, F, G
800	500	59-69	74-84	128	246	150W	A,A+,B,D,E,F,G	1600	400	59-69	74-84	206	396	300W	A, A+, B, D, E, F, G
800	600	59-69	74-84	149	285	150W	A,A+,B,D,E,F,G	1600	500	59-69	74-84	244	469	300W	A, A+, B, D, E, F, G
800	750	59-69	74-84	219	412	150W	A,A+,B,D,E,F,G	1600	600	59-69	74-84	282	542	300W	A, A+, B, D, E, F, G
1000	300	59-69	74-84	125	236	150W	A,A+,B,D,E,F,G	1600	750	59-69	74-84	429	833	450W	A, A+, B, D, E, F, G
1000	400	59-69	74-84	127	245	150W	A,A+,B,D,E,F,G	1800	300	59-69	74-84	228	446	150W	A, A+, B, D, E, F, G
1000	500	59-69	74-84	151	290	150W	A,A+,B,D,E,F,G	1800	400	59-69	74-84	236	452	300W	A, A+, B, D, E, F, G
1000	600	59-69	74-84	186	344	150W	A,A+,B,D,E,F,G	1800	500	59-69	74-84	280	536	300W	A, A+, B, D, E, F, G
1000	750	59-69	74-84	268	508	300W	A,A+,B,D,E,F,G	1800	600	59-69	74-84	324	621	450W	A, A+, B, D, E, F, G
1200	300	59-69	74-84	148	284	150W	A,A+,B,D,E,F,G	1800	750	59-69	74-84	489	958	600W	A, A+, B, D, E, F, G

PVD Finishes are Brushed Brass, Black Gold, Brushed Gunmetal & Brushed Bronze.

Watts to BTU conversion multiple is 3.41

Technical Tables & Drawings

WENDOVER - STRAIGHT

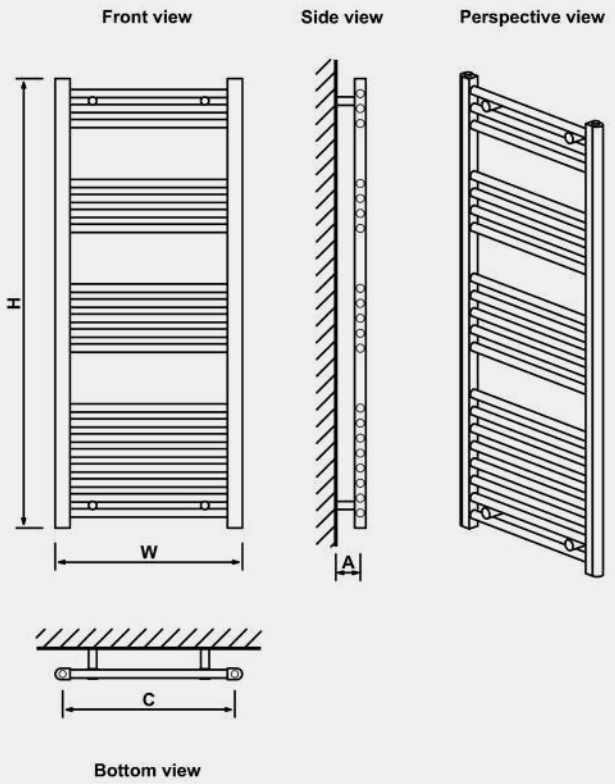

WENDOVER - CURVED

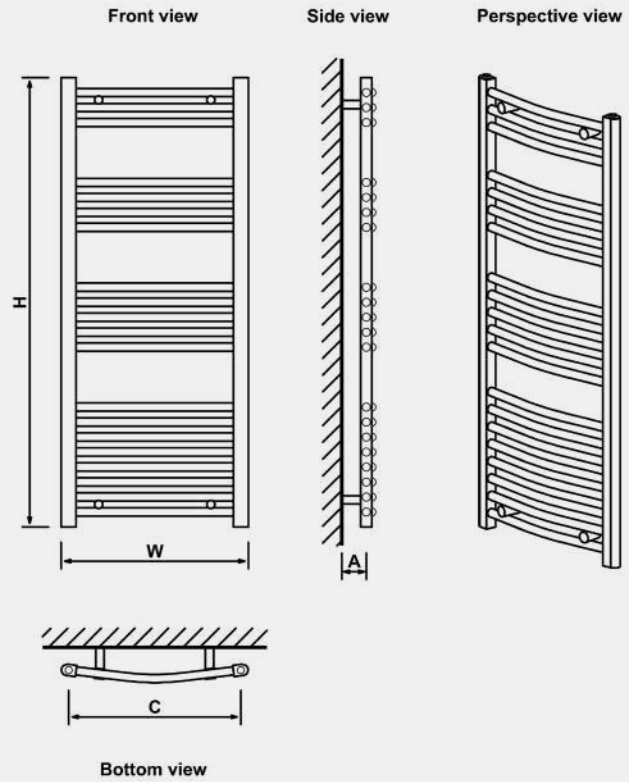

Wendover - Curved

Height H (mm)	Width W (mm)	Tappings C (mm)	Tappings from wall - A (mm)	Distance from wall - D (mm)	Tube Qty	Water Content L	Weight KG	Colour	▲T30 Watts	▲T50 Watts	Element Output	Element Type	Colour	▲T30 Watts	▲T50 Watts	Element Output	Element Type
600	400	350	60-75	87-102	10	2.13	3.55	Coloured	101*	193*	150W	A,A+,B,D,E,F,G	Chrome	79*	153*	100W	A,A+,B,D,E,F,G
600	500	450	55-70	94-109	10	2.45	4.01	Coloured	119*	229*	150W	A,A+,B,D,E,F,G	Chrome	94*	181*	100W	A,A+,B,D,E,F,G
600	600	550	50-65	98-113	10	2.77	4.48	Coloured	138*	264*	150W	A,A+,B,D,E,F,G	Chrome	109*	209*	150W	A,A+,B,D,E,F,G
600	750	700	70-90	194-214	10	3.35	5.31	Coloured	205	380	150W	A,A+,B,D,E,F,G	Chrome	133	251	150W	A,A+,B,D,E,F,G
800	400	350	60-75	87-102	14	2.93	4.72	Coloured	138*	266*	150W	A,A+,B,D,E,F,G	Chrome	91	173	150W	A,A+,B,D,E,F,G
800	500	450	55-70	94-109	14	3.37	5.37	Coloured	164*	315*	150W	A,A+,B,D,E,F,G	Chrome	109	206	150W	A,A+,B,D,E,F,G
800	600	550	50-65	98-113	14	3.82	6.02	Coloured	217	405	150W	A,A+,B,D,E,F,G	Chrome	146	282	150W	A,A+,B,D,E,F,G
800	750	700	70-90	194-214	14	4.62	7.16	Coloured	229*	440*	300W	A,A+,B,D,E,F,G	Chrome	182*	348*	150W	A,A+,B,D,E,F,G
1000	400	350	60-75	87-102	16	3.5	5.56	Coloured	164*	315*	150W	A,A+,B,D,E,F,G	Chrome	113	216	150W	A,A+,B,D,E,F,G
1000	500	450	55-70	94-109	16	4.01	6.3	Coloured	194*	372*	150W	A,A+,B,D,E,F,G	Chrome	134	257	150W	A,A+,B,D,E,F,G
1000	600	550	50-65	98-113	16	4.53	7.05	Coloured	223*	429*	300W	A,A+,B,D,E,F,G	Chrome	155	295	150W	A,A+,B,D,E,F,G
1000	750	700	70-90	194-214	16	5.44	8.35	Coloured	268*	514*	300W	A,A+,B,D,E,F,G	Chrome	212*	406*	300W	A,A+,B,D,E,F,G
1200	400	350	60-75	87-102	20	4.28	6.71	Coloured	202*	387*	300W	A,A+,B,D,E,F,G	Chrome	136	262	150W	A,A+,B,D,E,F,G
1200	500	450	55-70	94-109	20	4.93	7.64	Coloured	254	483	300W	A,A+,B,D,E,F,G	Chrome	161	311	150W	A,A+,B,D,E,F,G
1200	600	550	50-65	98-113	20	5.57	8.57	Coloured	310	576	300W	A,A+,B,D,E,F,G	Chrome	204	386	300W	A,A+,B,D,E,F,G
1200	750	700	70-90	194-214	20	6.71	10.2	Coloured	332*	636*	450W	A,A+,B,D,E,F,G	Chrome	262*	502*	300W	A,A+,B,D,E,F,G
1600	400	350	60-75	87-102	26	5.64	8.7	Coloured	265*	508*	300W	A,A+,B,D,E,F,G	Chrome	186	363	300W	A,A+,B,D,E,F,G
1600	500	450	55-70	94-109	26	6.48	9.91	Coloured	313*	601*	450W	A,A+,B,D,E,F,G	Chrome	220	431	300W	A,A+,B,D,E,F,G
1600	600	550	50-65	98-113	26	7.31	11.12	Coloured	386	740	450W	A,A+,B,D,E,F,G	Chrome	254	496	300W	A,A+,B,D,E,F,G
1600	750	700	70-90	194-214	26	8.79	13.24	Coloured	434*	832*	600W	A,A+,B,D,E,F,G	Chrome	343*	657*	450W	A,A+,B,D,E,F,G
1800	400	350	60-75	87-102	30	6.43	9.85	Coloured	303*	581*	300W	A,A+,B,D,E,F,G	Chrome	239*	459*	300W	A,A+,B,D,E,F,G
1800	500	450	55-70	94-109	30	7.39	11.25	Coloured	358*	687*	450W	A,A+,B,D,E,F,G	Chrome	283*	543*	300W	A,A+,B,D,E,F,G
1800	600	550	50-65	98-113	30	8.35	12.65	Coloured	538	1012	600W	A,A+,B,D,E,F,G	Chrome	371	703	450W	A,A+,B,D,E,F,G
1800	750	700	70-90	194-214	30	10.06	15.09	Coloured	594	1116	600W	A,A+,B,D,E,F,G	Chrome	403	766	450W	A,A+,B,D,E,F,G

* Further heat output information available on eastbrooktrade.com **E&OA**

Watts to BTU conversion multiple is 3.41

Technical Tables & Drawings

BIAVA MULTIRAIL HV - THE MULTIRAIL RANGE

Biava Multirail Hidden Vent (HV) - Straight

Height H (mm)	Width W (mm)	Tappings C (mm)	Tappings from wall - A (mm)	Tube Qty	Water Content L	Weight KG	Colour	▲T30 Watts	▲T50 Watts	Element Output	Element Type	Colour	▲T30 Watts	▲T50 Watts	Element Output	Element Type
360	400	350	70-85	6	1.40	2.2	Coloured	73	139	100W	A,A+,B,D,E,F,G	Chrome	48	91	150W	B
688	450	400	70-85	14	3.10	4.9	Coloured	149	282	150W	A,A+,B,D,E,F,G	Chrome	96	184	150W	A,A+,B,D,E,F,G
688	500	450	70-85	14	3.27	5.2	-	-	-	-	-	Chrome	108*	211*	150W	A,A+,B,D,E,F,G
688	600	550	70-85	14	3.70	5.9	Coloured	191	363	150W	A,A+,B,D,E,F,G	Chrome	124	238	150W	A,A+,B,D,E,F,G
688	750	700	70-85	14	4.40	7	Coloured	233	441	300W	A,A+,B,D,E,F,G	Chrome	152	291	150W	A,A+,B,D,E,F,G
1118	450	400	70-85	22	4.88	7.7	Coloured	238	454	300W	A,A+,B,D,E,F,G	Chrome	152	295	150W	A,A+,B,D,E,F,G
1118	500	450	70-85	22	5.21	8	-	-	-	-	-	Chrome	173*	335*	150W	A,A+,B,D,E,F,G
1118	600	550	70-85	22	5.94	9.4	Coloured	306	583	300W	A,A+,B,D,E,F,G	Chrome	197	381	300W	A,A+,B,D,E,F,G
1118	750	700	70-85	22	7.00	11	Coloured	372	709	450W	A,A+,B,D,E,F,G	Chrome	241	466	300W	A,A+,B,D,E,F,G
1720	450	400	70-85	34	7.53	11.9	Coloured	368	707	450W	A,A+,B,D,E,F,G	Chrome	235	460	300W	A,A+,B,D,E,F,G
1720	500	450	70-85	34	8.04	12.3	-	-	-	-	-	Chrome	266*	517*	300W	A,A+,B,D,E,F,G
1720	600	550	70-85	34	9.17	14.4	Coloured	473	909	600W	A,A+,B,D,E,F,G	Chrome	305	595	450W	A,A+,B,D,E,F,G
1720	750	700	70-85	34	10.80	17	Coloured	575	1104	750W	A,A+,B,D,E,F,G	Chrome	372	727	600W	A,A+,B,D,E,F,G

* Further heat output information available on eastbrooktrade.com **E&OA**

Watts to BTU conversion multiple is 3.41

WINGRAVE - THE MULTIRAIL RANGE

Wingrave - Straight

Height H (mm)	Width W (mm)	Tappings C (mm)	Tappings from wall - A (mm)	Distance from wall - D (mm)	Tube Qty	Water Content L	Weight KG	Colour	▲T30 Watts	▲T50 Watts	Element Output	Element Type	Colour	▲T30 Watts	▲T50 Watts	Element Output	Element Type
600	300	256	79	64	10	2.1	2.9	Coloured	87	163	100W	A,A+,B,D,E,F,G	Chrome	56	105	100W	A,A+
600	400	356	79	64	10	2.4	3.32	Coloured	110	206	150W	A,A+,B,D,E,F,G	Chrome	71	133	100W	A,A+
600	500	456	79	64	10	2.7	3.87	Coloured	132	247	150W	A,A+,B,D,E,F,G	Chrome	85	160	100W	A,A+,B,D,E,F,G
600	600	556	79	64	10	3.1	3.91	Coloured	153	286	150W	A,A+,B,D,E,F,G	Chrome	99	186	150W	A,A+,B,D,E,F,G
600	1000	955	79	64	10	4.4	5.2	Coloured	231	434	300W	A,A+,B,D,F,G	Chrome	150	283	150W	A,A+,B,D,F,G
600	1200	955	79	64	10	5	7.3	Coloured	268	503	300W	A,A+,B,D,F,G	Chrome	175	330	150W	A,A+,B,D,F,G
800	300	256	79	64	14	2.8	3.55	Coloured	113	213	150W	A,A+,B,D,E,F,G	Chrome	72	136	150W	B,D,E,F,G
800	400	356	79	64	14	2.94	4.9	Coloured	143	269	150W	A,A+,B,D,E,F,G	Chrome	91	172	150W	A,A+,B,D,E,F,G
800	500	456	79	64	14	3.39	5.7	Coloured	171	322	150W	A,A+,B,D,E,F,G	Chrome	109	207	150W	A,A+,B,D,E,F,G
800	600	556	79	64	14	3.85	6.5	Coloured	198	374	300W	A,A+,B,D,E,F,G	Chrome	127	241	150W	A,A+,B,D,E,F,G
1000	300	256	79	64	16	3.4	4.2	Coloured	139	264	150W	A,A+,B,D,E,F,G	Chrome	88	168	150W	A,A+,B,D,E,F,G
1000	400	356	79	64	16	3.51	5.9	Coloured	176	333	150W	A,A+,B,D,E,F,G	Chrome	112	214	150W	A,A+,B,D,E,F,G
1000	500	456	79	64	16	4.04	6.8	Coloured	211	400	300W	A,A+,B,D,E,F,G	Chrome	135	257	150W	A,A+,B,D,E,F,G
1000	600	556	79	64	16	4.56	7.7	Coloured	245	464	300W	A,A+,B,D,E,F,G	Chrome	156	299	150W	A,A+,B,D,E,F,G
1200	300	256	79	64	20	4.2	5.1	Coloured	167	317	150W	A,A+,B,D,E,F,G	Chrome	105	203	150W	A,A+,B,D,E,F,G
1200	400	356	79	64	20	4.3	7.2	Coloured	210	400	300W	A,A+,B,D,E,F,G	Chrome	134	257	150W	A,A+,B,D,E,F,G
1200	500	456	79	64	20	4.95	8.3	Coloured	252	480	300W	A,A+,B,D,E,F,G	Chrome	161	309	150W	A,A+,B,D,E,F,G
1200	600	556	79	64	20	5.61	9.4	Coloured	293	557	300W	A,A+,B,D,E,F,G	Chrome	187	359	300W	A,A+,B,D,E,F,G
1400	300	256	79	64	22	4.7	5.6	Coloured	195	372	150W	A,A+,B,D,E,F,G	Chrome	123	239	150W	A,A+,B,D,E,F,G
1400	400	356	79	64	22	4.88	8.4	Coloured	246	470	300W	A,A+,B,D,E,F,G	Chrome	156	303	150W	A,A+,B,D,E,F,G
1400	500	456	79	64	22	5.6	9.4	Coloured	295	564	300W	A,A+,B,D,E,F,G	Chrome	188	364	150W	A,A+,B,D,E,F,G
1400	600	556	79	64	22	6.3	10.4	Coloured	342	654	450W	A,A+,B,D,E,F,G	Chrome	219	424	300W	A,A+,B,D,E,F,G
1600	300	256	79	64	26	5.5	6.3	Coloured	224	429	300W	A,A+,B,D,E,F,G	Chrome	142	277	150W	A,A+,B,D,E,F,G
1600	400	356	79	64	26	5.66	9.5	Coloured	283	543	300W	A,A+,B,D,E,F,G	Chrome	180	352	150W	A,A+,B,D,E,F,G
1600	500	456	79	64	26	6.51	10.8	Coloured	339	651	450W	A,A+,B,D,E,F,G	Chrome	217	423	300W	A,A+,B,D,E,F,G
1600	600	556	79	64	26	7.36	12.2	Coloured	393	755	450W	A,A+,B,D,E,F,G	Chrome	252	492	300W	A,A+,B,D,E,F,G
1800	300	256	79	64	30	6.3	7.3	Coloured	254	490	300W	A,A+,B,D,E,F,G	Chrome	163	318	150W	A,A+,B,D,E,F,G
1800	400	356	79	64	30	6.45	10.8	Coloured	321	619	450W	A,A+,B,D,E,F,G	Chrome	206	404	300W	A,A+,B,D,E,F,G
1800	500	456	79	64	30	7.43	12.2	Coloured	385	742	450W	A,A+,B,D,E,F,G	Chrome	247	486	300W	A,A+,B,D,E,F,G
1800	600	556	79	64	30	8.41	13.8	Coloured	446	861	600W	A,A+,B,D,E,F,G	Chrome	288	565	450W	A,A+,B,D,E,F,G

Watts to BTU conversion multiple is 3.41

Biava Multirail HV Straight

Wingrave Straight

Technical Tables & Drawings

BIAVA HIDDEN VENT (HV) - STRAIGHT

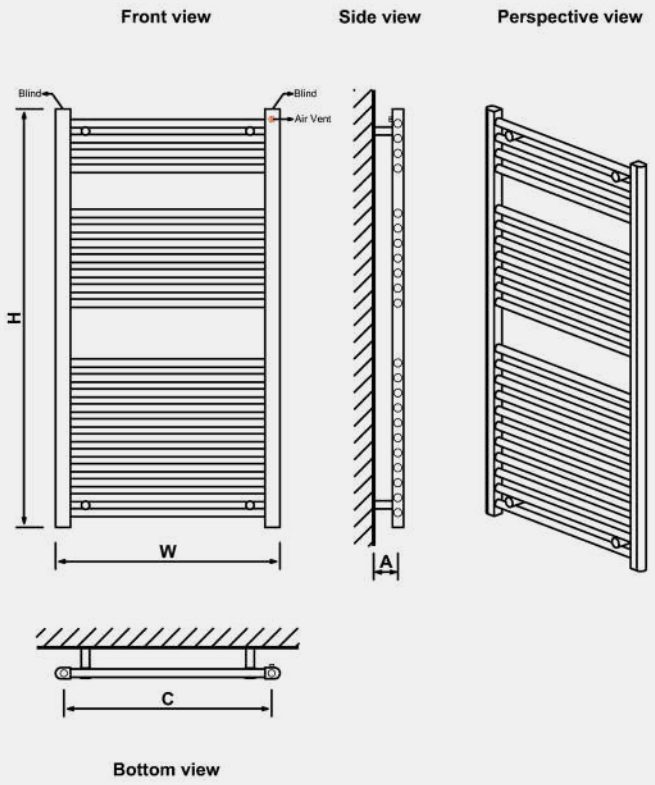

WINGRAVE - STRAIGHT

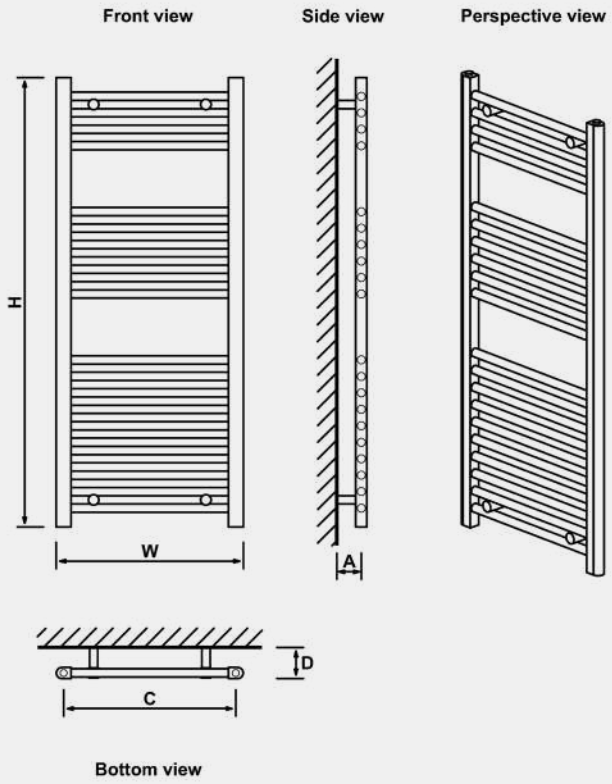

Technical Tables & Drawings

WINGRAVE - THE MULTIRAIL RANGE

Wingrave - Curved

Height H (mm)	Width W (mm)	Tappings C (mm)	Tappings from wall - A (mm)	Distance from wall - D (mm)	Tube Qty	Water Content L	Weight KG	Colour	▲T30 Watts	▲T50 Watts	Element Output	Element Type	Colour	▲T30 Watts	▲T50 Watts	Element Output	Element Type
800	400	356	92	65	14	3	4.9	Coloured	143	269	150W	A,A+,B,D,E,F,G	Chrome	91	172	150W	A,A+,B,D,E,F,G
800	500	456	92	65	14	3.58	5.9	Coloured	171	322	150W	A,A+,B,D,E,F,G	Chrome	108	207	150W	A,A+,B,D,E,F,G
800	600	556	92	65	14	4.39	7.2	Coloured	198	374	300W	A,A+,B,D,E,F,G	Chrome	127	241	150W	A,A+,B,D,E,F,G
1000	400	356	92	65	16	5.77	9.5	Coloured	176	333	150W	A,A+,B,D,E,F,G	Chrome	112	214	150W	A,A+,B,D,E,F,G
1000	500	456	92	65	16	6.58	10.8	Coloured	211	400	300W	A,A+,B,D,E,F,G	Chrome	135	257	150W	A,A+,B,D,E,F,G
1000	600	556	92	65	16	3.46	5.7	Coloured	245	464	300W	A,A+,B,D,E,F,G	Chrome	156	299	150W	A,A+,B,D,E,F,G
1200	400	356	92	65	20	4.12	6.8	Coloured	210	400	300W	A,A+,B,D,E,F,G	Chrome	134	257	150W	A,A+,B,D,E,F,G
1200	500	456	92	65	20	5.05	8.3	Coloured	252	480	300W	A,A+,B,D,E,F,G	Chrome	161	309	150W	A,A+,B,D,E,F,G
1200	600	556	92	65	20	6.64	10.8	Coloured	293	557	300W	A,A+,B,D,E,F,G	Chrome	187	359	300W	A,A+,B,D,E,F,G
1600	400	356	92	65	26	7.58	12.2	Coloured	283	543	300W	A,A+,B,D,E,F,G	Chrome	180	352	150W	A,A+,B,D,E,F,G
1600	500	456	92	65	26	3.93	6.5	Coloured	339	651	450W	A,A+,B,D,E,F,G	Chrome	217	423	300W	A,A+,B,D,E,F,G
1600	600	556	92	65	26	4.65	7.7	Coloured	393	755	450W	A,A+,B,D,E,F,G	Chrome	252	492	300W	A,A+,B,D,E,F,G
1800	400	356	92	65	30	5.72	9.4	Coloured	321	619	450W	A,A+,B,D,E,F,G	Chrome	206	404	300W	A,A+,B,D,E,F,G
1800	500	456	92	65	30	7.51	12.2	Coloured	385	742	450W	A,A+,B,D,E,F,G	Chrome	257	486	300W	A,A+,B,D,E,F,G
1800	600	556	92	65	30	8.58	13.8	Coloured	446	861	600W	A,A+,B,D,E,F,G	Chrome	288	565	450W	A,A+,B,D,E,F,G

Watts to BTU conversion multiple is 3.41

BIAVA MULTIRAIL - THE MULTIRAIL RANGE

Biava Multirail - Straight

Height H (mm)	Width W (mm)	Tappings C (mm)	Tappings from wall - A (mm)	Distance from wall - D (mm)	Tube Qty	Water Content L	Weight KG	Colour	▲T30 Watts	▲T50 Watts	Element Output	Element Type	Colour	▲T30 Watts	▲T50 Watts	Element Output	Element Type
360	400	350	75-90	90-105	6	1.28	2.32	Coloured	80	147	100W	A,A+,B,D,E,F,G	Chrome	54	104	150W	B
688	450	400	75-90	90-105	14	2.93	4.74	Coloured	146	269	150W	A,A+,B,D,E,F,G	Chrome	101	192	150W	A,A+,B,D,E,F,G
688	600	550	75-90	90-105	14	3.6	5.72	Coloured	183	336	150W	A,A+,B,D,E,F,G	Chrome	123	238	150W	A,A+,B,D,E,F,G
688	750	700	75-90	90-105	14	4.27	6.7	Coloured	219	403	300W	A,A+,B,D,E,F,G	Chrome	152	287	150W	A,A+,B,D,E,F,G
1118	450	400	75-90	80-100	22	4.67	7.29	Coloured	223	418	300W	A,A+,B,D,E,F,G	Chrome	172	293	150W	A,A+,B,D,E,F,G
1118	600	550	75-90	80-100	22	5.72	8.83	Coloured	281	525	300W	A,A+,B,D,E,F,G	Chrome	192	368	300W	A,A+,B,D,E,F,G
1118	750	700	75-90	80-100	22	6.78	10.37	Coloured	339	633	450W	A,A+,B,D,E,F,G	Chrome	231	442	300W	A,A+,B,D,E,F,G
1720	450	400	75-90	80-100	34	7.2	10.99	Coloured	348*	668*	450W	A,A+,B,D,E,F,G	Chrome	275*	528*	300W	A,A+,B,D,E,F,G
1720	600	550	75-90	80-100	34	8.83	13.37	Coloured	443*	850*	600W	A,A+,B,D,E,F,G	Chrome	350*	671*	450W	A,A+,B,D,E,F,G
1720	750	700	75-90	80-100	34	10.46	15.76	Coloured	526	1001	750W	A,A+,B,D,E,F,G	Chrome	425	674	600W	A,A+,B,D,E,F,G

* Further heat output information available on eastbrooktrade.com **E&OA**

Watts to BTU conversion multiple is 3.41

Biava Multirail - Curved

Height H (mm)	Width W (mm)	Tappings C (mm)	Tappings from wall - A (mm)	Distance from wall - D (mm)	Tube Qty	Water Content L	Weight KG	Colour	▲T30 Watts*	▲T50 Watts*	Element Output	Element Type	Colour	▲T30 Watts*	▲T50 Watts*	Element Output	Element Type
360	400	350	60-75	87-102	6	1.29	2.33	Coloured	60	116	100W	A,A+,B,D,E,F,G	Chrome	47	91	150W	B
688	450	400	57-72	90-105	14	2.94	4.76	Coloured	144	276	150W	A,A+,B,D,E,F,G	Chrome	114	218	150W	A,A+,B,D,E,F,G
688	600	550	50-65	98-113	14	3.62	5.74	Coloured	183	351	150W	A,A+,B,D,E,F,G	Chrome	144	277	150W	A,A+,B,D,E,F,G
688	750	700	75-90	194-214	14	4.42	6.86	Coloured	222	366	300W	A,A+,B,D,E,F,G	Chrome	175	336	150W	A,A+,B,D,E,F,G
1118	450	400	57-72	96-111	22	4.69	7.33	Coloured	229	387	300W	A,A+,B,D,E,F,G	Chrome	181	347	150W	A,A+,B,D,E,F,G
1118	600	550	50-65	104-119	22	5.75	8.87	Coloured	249	439	300W	A,A+,B,D,E,F,G	Chrome	229	439	300W	A,A+,B,D,E,F,G
1118	750	700	75-90	194-214	22	7.01	10.63	Coloured	277	532	450W	A,A+,B,D,E,F,G	Chrome	277	532	300W	A,A+,B,D,E,F,G
1720	450	400	57-72	96-111	34	7.24	11.06	Coloured	279	637	450W	A,A+,B,D,E,F,G	Chrome	352	607	300W	A,A+,B,D,E,F,G
1720	600	550	50-65	104-119	34	8.87	13.44	Coloured	448	859	600W	A,A+,B,D,E,F,G	Chrome	354	679	450W	A,A+,B,D,E,F,G
1720	750	700	75-90	194-214	34	10.81	16.18	Coloured	543	1041	750W	A,A+,B,D,E,F,G	Chrome	429	822	600W	A,A+,B,D,E,F,G

* Further heat output information available on eastbrooktrade.com **E&OA**

Watts to BTU conversion multiple is 3.41

Wingrave Curved

Biava Multirail Straight

Biava Multirail Curved

Technical Tables & Drawings

WINGRAVE - CURVED

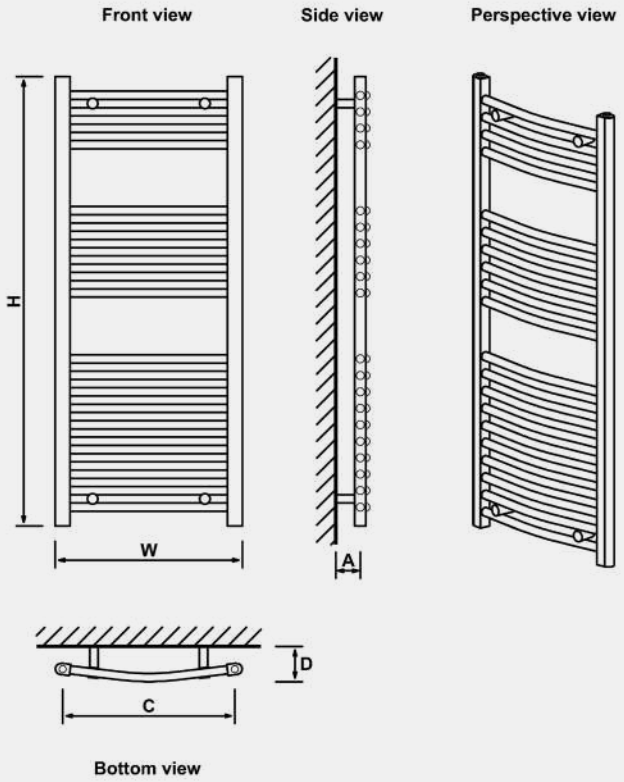

BIAVA MULTIRAIL - STRAIGHT

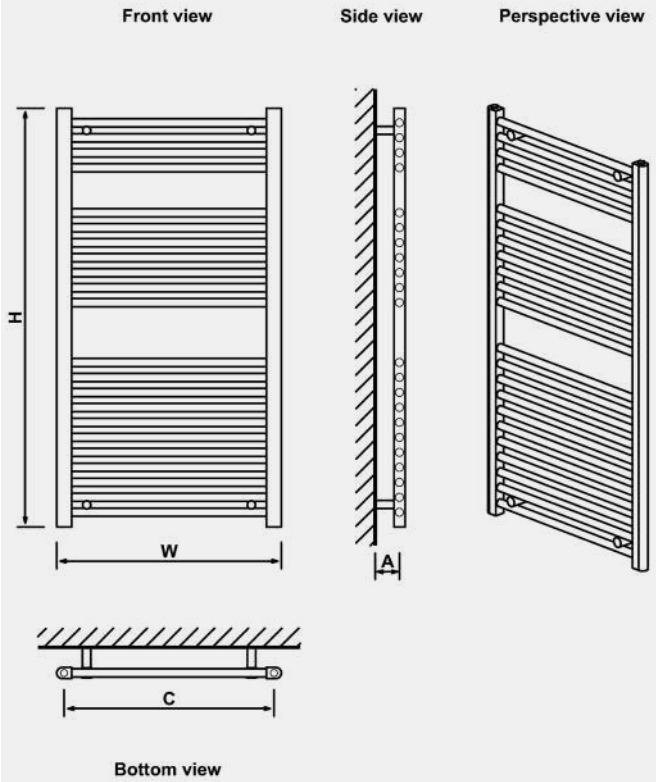

BIAVA MULTIRAIL - CURVED

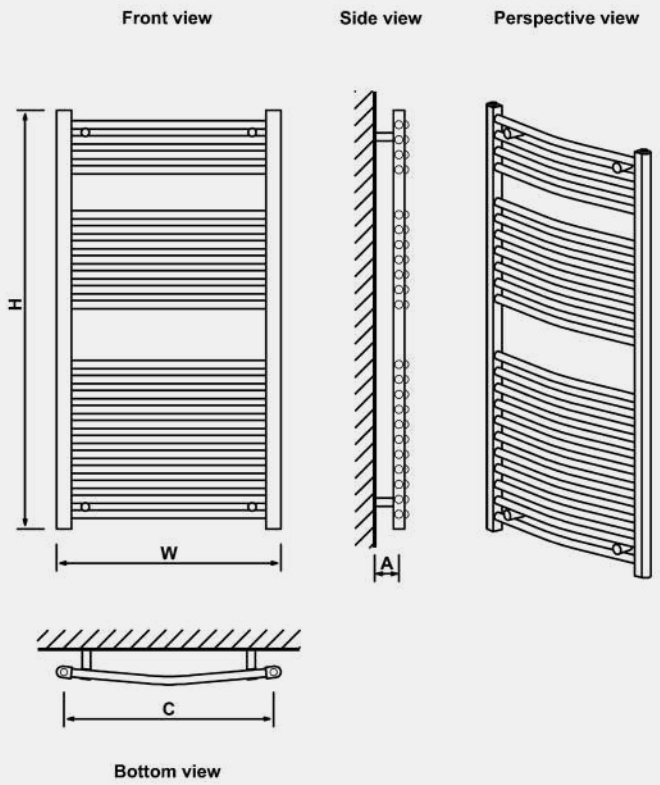

Technical Tables & Drawings

WESTWARD - THE MULTIRAIL RANGE

Westward - Straight

Height H (mm)	Width W (mm)	Tappings C (mm)	Distance from wall - D (mm)	Tappings from wall - A (mm)	Tube Qty	Water Content L	Weight KG	Colour	▲T30 Watts	▲T50 Watts	Element Output	Element Type	Colour	▲T30 Watts	▲T50 Watts	Element Output	Element Type
600	500	456	79	65	11	3	5.7	Coloured	138	260	150W	A,A+,B,D,E,F,G	Chrome	88	169	150W	A,A+,B,D,E,F,G
600	600	556	79	65	11	3.5	6.4	Coloured	161	304	150W	A,A+,B,D,E,F,G	Chrome	104	198	150W	A,A+,B,D,E,F,G
600	800	756	79	65	11	4.4	8	Coloured	206	389	300W	A,A+,B,D,E,F,G	Chrome	133	255	150W	A,A+,B,D,E,F,G
800	400	356	79	65	14	3.3	6.2	Coloured	150	284	150W	A,A+,B,D,E,F,G	Chrome	96	184	150W	A,A+,B,D,E,F,G
800	500	456	79	65	14	3.9	7.2	Coloured	181	343	300W	A,A+,B,D,E,F,G	Chrome	116	223	150W	A,A+,B,D,E,F,G
800	600	556	79	65	14	4.5	8.2	Coloured	212	401	300W	A,A+,B,D,E,F,G	Chrome	136	262	150W	A,A+,B,D,E,F,G
1200	400	356	79	65	20	4.9	8.8	Coloured	223	424	300W	A,A+,B,D,E,F,G	Chrome	142	275	150W	A,A+,B,D,E,F,G
1200	500	456	79	65	20	5.7	10.3	Coloured	270	513	300W	A,A+,B,D,E,F,G	Chrome	173	334	150W	A,A+,B,D,E,F,G
1200	600	556	79	65	20	6.5	11.8	Coloured	315	599	450W	A,A+,B,D,E,F,G	Chrome	203	391	300W	A,A+,B,D,E,F,G
1800	400	356	79	65	30	7.3	13	Coloured	337	645	450W	A,A+,B,D,E,F,G	Chrome	215	418	300W	A,A+,B,D,E,F,G
1800	500	456	79	65	30	8.5	15.2	Coloured	407	780	600W	A,A+,B,D,E,F,G	Chrome	261	508	300W	A,A+,B,D,E,F,G
1800	600	556	79	65	30	9.8	17.4	Coloured	476	912	600W	A,A+,B,D,E,F,G	Chrome	306	595	450W	A,A+,B,D,E,F,G

Watts to BTU conversion multiple is 3.41

RION MULTIRAIL - THE MULTIRAIL RANGE

Rion Multirail

Height H (mm)	Width W (mm)	Tappings C (mm)	Distance from wall - D (mm)	Tappings from wall - A (mm)	Tube Qty	Water Content L	Weight KG	Colour	▲T30 Watts	▲T50 Watts	Element Output	Element Type	Colour	▲T30 Watts	▲T50 Watts	Element Output	Element Type
800	500	455	95	80	13	3.24	7	Coloured	173	332	150W	A, A+, B, D, E, F, G	Chrome	109	212	100W	A, A+, B, D, E, F, G
800	600	555	95	80	13	3.65	8.2	Coloured	197	378	150W	A, A+, B, D, E, F, G	Chrome	123	240	100W	A, A+, B, D, E, F, G
1200	500	455	95	80	22	5.21	11	Coloured	269	515	150W	A, A+, B, D, E, F, G	Chrome	170	331	150W	A, A+, B, D, E, F, G
1200	600	555	95	80	22	5.89	13.03	Coloured	307	587	300W	A, A+, B, D, E, F, G	Chrome	192	374	150W	A, A+, B, D, E, F, G
1800	500	455	95	80	31	7.54	15.4	Coloured	413	784	300W	A, A+, B, D, E, F, G	Chrome	265	515	150W	A, A+, B, D, E, F, G
1800	600	555	95	80	31	8.5	18.4	Coloured	471	893	300W	A, A+, B, D, E, F, G	Chrome	299	582	300W	A, A+, B, D, E, F, G

Watts to BTU conversion multiple is 3.41

TUSCAN - THE MULTIRAIL RANGE

Tuscan

Height H (mm)	Width W (mm)	Tappings C (mm)	Tappings from wall - A (mm)	Distance from wall - D (mm)	Tube Qty	Water Content L	Weight KG	Colour	▲T30 Watts	▲T50 Watts	Element Output	Element Type	Colour	▲T30 Watts	▲T50 Watts	Element Output	Element Type
650	450	400	65-80	80-95	5	1.78	3.26	Coloured	105	198	100W	A,A+,B,D,E,F,G	Chrome	60	115	100W	A,A+,B,D,E,F,G
650	600	550	65-80	80-95	5	2.01	3.57	Coloured	120	226	100W	A,A+,B,D,E,F,G	Chrome	77	151	100W	A,A+,B,D,E,F,G
1200	450	400	65-80	80-95	8	3.14	5.19	Coloured	177	334	150W	A,A+,B,D,E,F,G	Chrome	105	204	150W	A,A+,B,D,E,F,G
1200	600	550	65-80	80-95	8	3.51	5.69	Coloured	185*	348*	150W	A,A+,B,D,E,F,G	Chrome	130	246	150W	A,A+,B,D,E,F,G
1750	450	400	65-80	80-95	12	4.61	7.28	Coloured	252	476	150W	A,A+,B,D,E,F,G	Chrome	168	321	150W	A,A+,B,D,E,F,G
1750	600	550	65-80	80-95	12	5.18	8.04	Coloured	282	534	300W	A,A+,B,D,E,F,G	Chrome	206	392	150W	A,A+,B,D,E,F,G

* Further heat output information available on eastbrooktrade.com **E&OA**

Watts to BTU conversion multiple is 3.41

BIAVA ROUND - MULTIRAIL RANGE

Biava Round

Height H (mm)	Width W (mm)	Tappings C (mm)	Tappings from wall - A (mm)	Distance from wall - D (mm)	Tube Qty	Water Content L	Weight KG	Colour	▲T30 Watts	▲T50 Watts	Element Output	Element Type	Colour	▲T30 Watts	▲T50 Watts	Element Output	Element Type
600	400	362	63-73	82-92	10	1.91	3.67	Coloured	107	197	100W	A, A+, B, D, E, F, G	Chrome	70	130	100W	A, A+, B, D, E, F, G
600	500	462	63-73	82-92	10	2.14	4.07	Coloured	128	236	150W	A, A+, B, D, E, F, G	Chrome	84	155	100W	A, A+, B, D, E, F, G
600	600	562	63-73	82-92	10	2.37	4.47	Coloured	149	274	150W	A, A+, B, D, E, F, G	Chrome	97	179	150W	A, A+, B, D, E, F, G
1200	400	362	63-73	82-92	18	3.66	6.25	Coloured	197	370	150W	A, A+, B, D, E, F, G	Chrome	132	249	150W	A, A+, B, D, E, F, G
1200	500	462	63-73	82-92	18	4.08	6.97	Coloured	236	444	300W	A, A+, B, D, E, F, G	Chrome	157	296	150W	A, A+, B, D, E, F, G
1200	600	562	63-73	82-92	18	4.5	7.69	Coloured	274	516	300W	A, A+, B, D, E, F, G	Chrome	181	342	150W	A, A+, B, D, E, F, G
1800	400	362	63-73	82-92	27	5.5	8.96	Coloured	297	569	300W	A, A+, B, D, E, F, G	Chrome	201	388	300W	A, A+, B, D, E, F, G
1800	500	462	63-73	82-92	27	6.12	10.04	Coloured	356	684	450W	A, A+, B, D, E, F, G	Chrome	239	462	300W	A, A+, B, D, E, F, G
1800	600	562	63-73	82-92	27	6.75	11.12	Coloured	414	794	450W	A, A+, B, D, E, F, G	Chrome	276	533	300W	A, A+, B, D, E, F, G

Watts to BTU conversion multiple is 3.41

Technical Tables & Drawings

WESTWARD - STRAIGHT

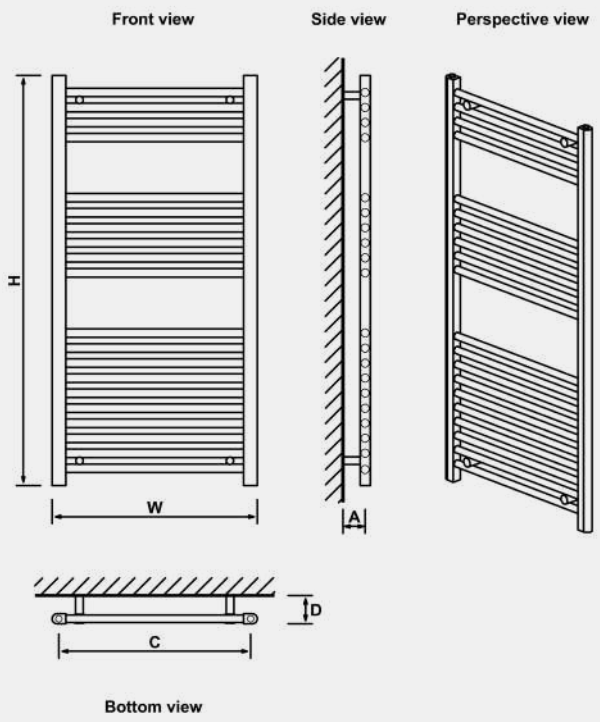

RION MULTIRAIL

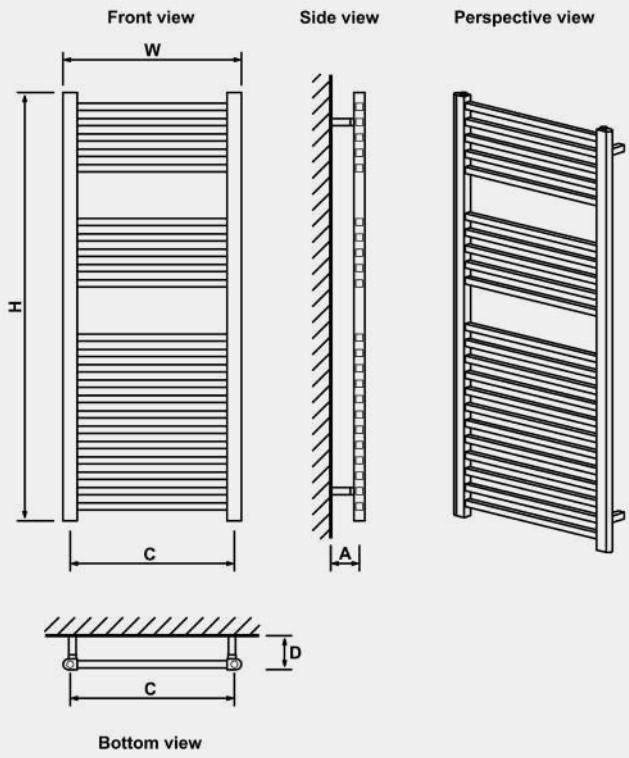

TUSCAN

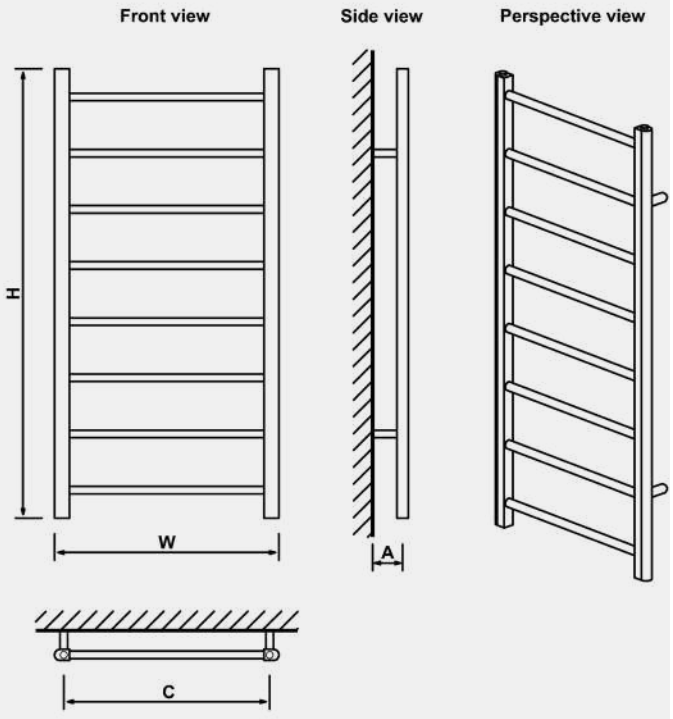

BIAVA ROUND

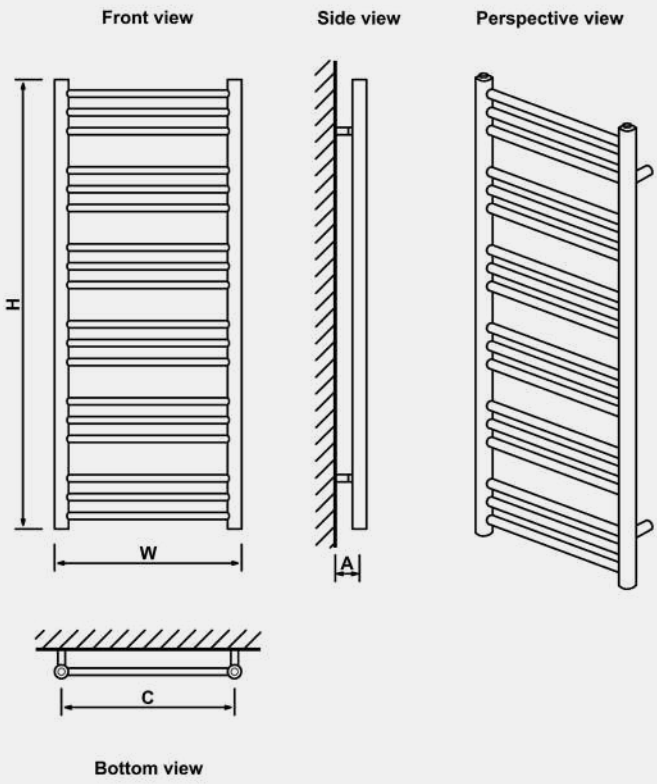

Technical Tables & Drawings

CORINIUM ROUND - THE MULTIRAIL RANGE

Corinium Round

Height H (mm)	Width W (mm)	Tappings C (mm)	Distance from wall - D (mm)	Tappings from wall - A (mm)	Tube Qty	Water Content L	Weight KG	Colour	▲T30 Watts	▲T50 Watts	Element Output	Element Type	Colour	▲T30 Watts	▲T50 Watts	Element Output	Element Type
800	500	458	106	85	12	3.9	5.07	Coloured	164	312	150W	A,A+,B,D,E,F,G	Chrome	109	207	100W	A,A+,B,D,E,F,G
800	600	558	106	85	12	4.3	5.72	Coloured	192	364	150W	A,A+,B,D,E,F,G	Chrome	127	242	100W	A,A+,B,D,E,F,G
1200	500	458	106	85	18	5.8	7.43	Coloured	250	474	300W	A,A+,B,D,E,F,G	Chrome	164	314	150W	A,A+,B,D,E,F,G
1200	600	558	106	85	18	6.4	8.41	Coloured	292	554	300W	A,A+,B,D,E,F,G	Chrome	192	366	300W	A,A+,B,D,E,F,G
1800	500	458	106	85	27	8.7	10.98	Coloured	380	721	600W	A,A+,B,D,E,F,G	Chrome	250	480	300W	A,A+,B,D,E,F,G
1800	600	558	106	85	27	9.6	12.45	Coloured	444	842	600W	A,A+,B,D,E,F,G	Chrome	292	560	300W	A,A+,B,D,E,F,G

Watts to BTU conversion multiple is 3.41

TUSCAN ROUND - THE MULTIRAIL RANGE

Tuscan Round

Height H (mm)	Width W (mm)	Tappings C (mm)	Distance from wall - D (mm)	Tappings from wall - A (mm)	Tube Qty	Water Content L	Weight KG	Colour	▲T30 Watts	▲T50 Watts	Element Output	Element Type	Colour	▲T30 Watts	▲T50 Watts	Element Output	Element Type
800	500	458	106	85	7	3.1	4.04	Coloured	129	243	150W	A,A+,B,D,E,F,G	Chrome	83	159	100W	A,A+,B,D,E,F,G
800	600	558	106	85	7	3.3	4.42	Coloured	148	281	150W	A,A+,B,D,E,F,G	Chrome	96	184	100W	A,A+,B,D,E,F,G
1200	500	458	106	85	10	4.5	5.78	Coloured	193	366	300W	A,A+,B,D,E,F,G	Chrome	126	240	150W	A,A+,B,D,E,F,G
1200	600	558	106	85	10	4.8	6.33	Coloured	223	422	300W	A,A+,B,D,E,F,G	Chrome	145	277	150W	A,A+,B,D,E,F,G
1800	500	458	106	85	15	6.7	8.51	Coloured	290	548	450W	A,A+,B,D,E,F,G	Chrome	189	361	300W	A,A+,B,D,E,F,G
1800	600	558	106	85	15	7.2	9.32	Coloured	335	632	450W	A,A+,B,D,E,F,G	Chrome	218	417	300W	A,A+,B,D,E,F,G

Watts to BTU conversion multiple is 3.41

BIAVA TUBE ON TUBE - MULTIRAIL RANGE

Biava Tube on Tube

Height H (mm)	Width W (mm)	Tappings C (mm)	Tappings from wall - A (mm)	Distance from wall - D (mm)	Tube Qty	Water Content L	Weight KG	Colour	▲T30 Watts	▲T50 Watts	Element Output	Element Type	Colour	▲T30 Watts	▲T50 Watts	Element Output	Element Type
600	400	350	51-66	85-100	10	1.72	3.34	-	-	-	-	-	Chrome	81	148	100W	A, A+, B, D, E, F, G
600	500	450	51-66	85-100	10	1.95	3.74	-	-	-	-	-	Chrome	94	175	100W	A, A+, B, D, E, F, G
600	600	550	51-66	85-100	10	2.18	4.14	-	-	-	-	-	Chrome	109	199	150W	A, A+, B, D, E, F, G
1200	400	350	51-66	85-100	25	3.89	7.05	-	-	-	-	-	Chrome	177	328	150W	A, A+, B, D, E, F, G
1200	500	450	51-66	85-100	25	4.47	8.05	-	-	-	-	-	Chrome	209	388	300W	A, A+, B, D, E, F, G
1200	600	550	51-66	85-100	25	5.05	9.05	-	-	-	-	-	Chrome	240	450	300W	A, A+, B, D, E, F, G
1800	400	350	51-66	85-100	39	5.98	10.59	-	-	-	-	-	Chrome	278	514	300W	A, A+, B, D, E, F, G
1800	500	450	51-66	85-100	39	6.88	12.15	-	-	-	-	-	Chrome	329	608	450W	A, A+, B, D, E, F, G
1800	600	550	51-66	85-100	39	7.79	13.71	-	-	-	-	-	Chrome	366	696	450W	A, A+, B, D, E, F, G

Watts to BTU conversion multiple is 3.41

BIAVA SQUARE - MULTIRAIL RANGE

Biava Square

Height H (mm)	Width W (mm)	Tappings C (mm)	Tappings from wall - A (mm)	Distance from wall - D (mm)	Tube Qty	Water Content L	Weight KG	Colour	▲T30 Watts	▲T50 Watts	Element Output	Element Type	Colour	▲T30 Watts	▲T50 Watts	Element Output	Element Type
600	400	360	61-76	82-100	9	2.77	4.56	-	-	-	-	-	Chrome	79	150	100W	A, A+, B, D, E, F, G
600	500	460	61-76	82-100	9	3.12	5.19	-	-	-	-	-	Chrome	94	178	150W	A, A+, B, D, E, F, G
600	600	560	61-76	82-100	9	3.47	5.83	-	-	-	-	-	Chrome	108	206	150W	A, A+, B, D, E, F, G
1200	400	360	61-76	82-100	23	6.17	9.77	-	-	-	-	-	Chrome	165	321	300W	A, A+, B, D, E, F, G
1200	500	460	61-76	82-100	23	7.07	11.39	-	-	-	-	-	Chrome	190	373	300W	A, A+, B, D, E, F, G
1200	600	560	61-76	82-100	23	7.97	13.02	-	-	-	-	-	Chrome	215	424	300W	A, A+, B, D, E, F, G
1800	400	360	61-76	82-100	33	9.06	14.05	-	-	-	-	-	Chrome	244	468	450W	A, A+, B, D, E, F, G
1800	500	460	61-76	82-100	33	10.35	16.38	-	-	-	-	-	Chrome	294	566	450W	A, A+, B, D, E, F, G
1800	600	560	61-76	82-100	33	11.65	18.71	-	-	-	-	-	Chrome	342	663	600W	A, A+, B, D, E, F, G

Watts to BTU conversion multiple is 3.41

Corinium Round

Tuscan Round

Biava Tube on Tube

Biava Square

Technical Tables & Drawings

CORINIUM ROUND

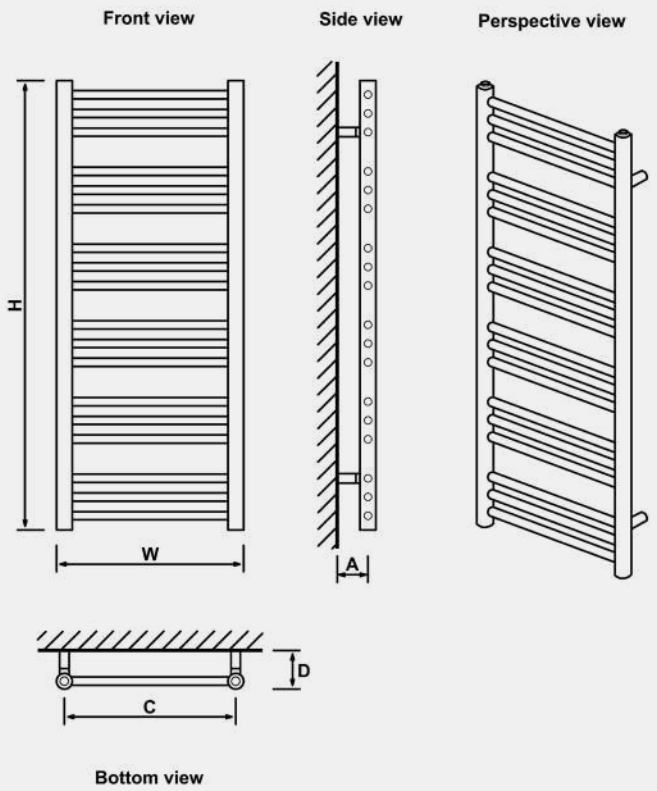

TUSCAN ROUND

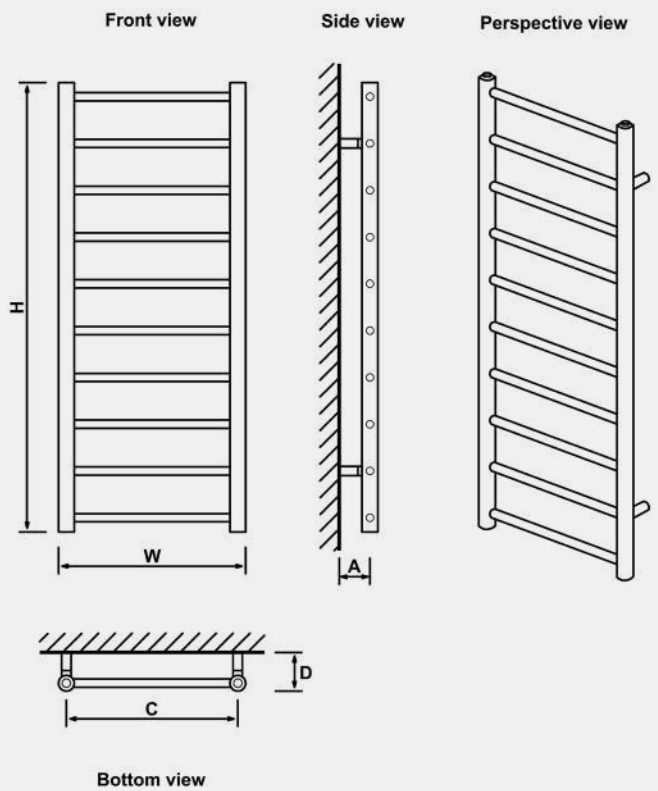

BIAVA TUBE ON TUBE

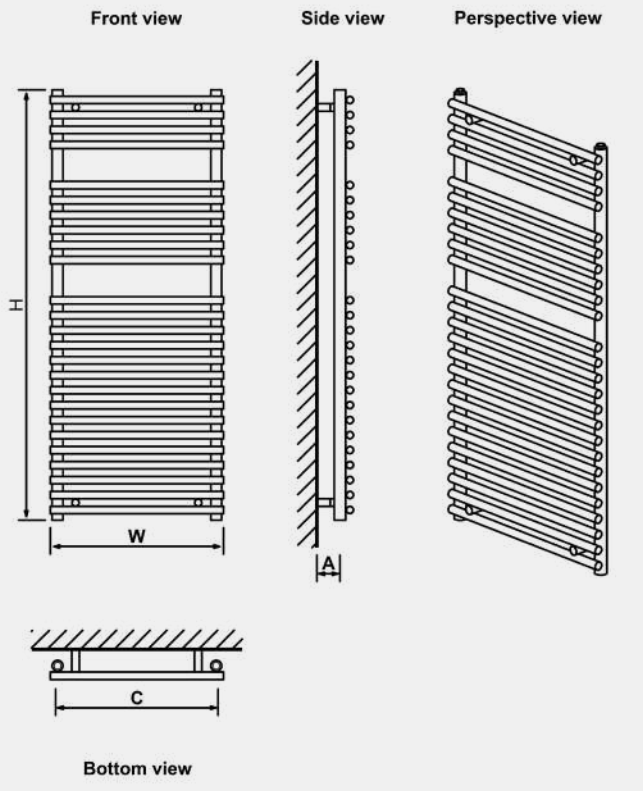

BIAVA SQUARE

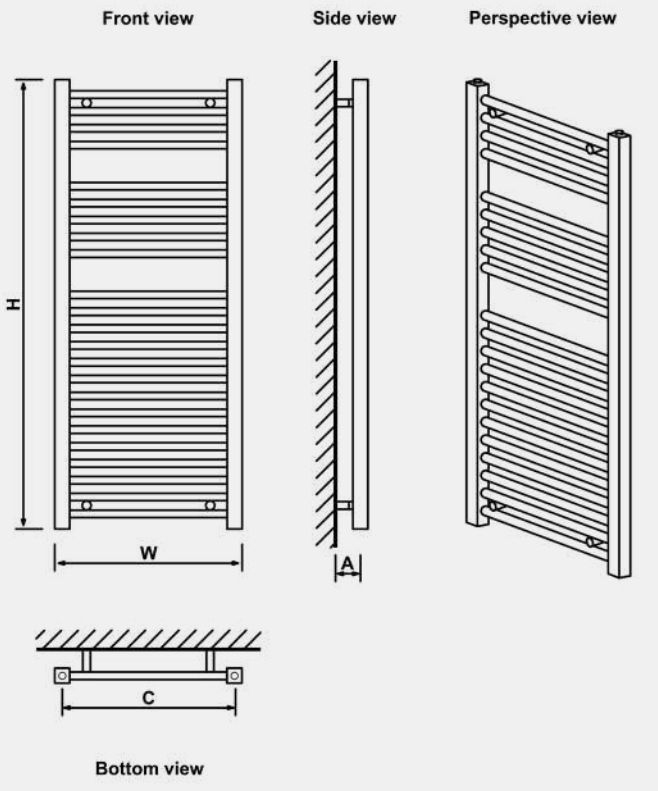

Technical Tables & Drawings

TUSCAN SQUARE - MULTIRAIL RANGE

Tuscan Square

Height H (mm)	Width W (mm)	Tappings C (mm)	Distance from wall - D (mm)	Tappings from wall - A (mm)	Tube Qty	Water Content L	Weight KG	Colour	▲T30 Watts	▲T50 Watts	Element Output	Element Type	Colour	▲T30 Watts	▲T50 Watts	Element Output	Element Type
800	500	470	95	80	7	2.1	4.6	Coloured	128	242	150W	A, A+, B, D, E, F, G	Chrome	83	159	100W	A, A+, B, D, E, F, G
800	600	570	95	80	7	2.3	4.9	Coloured	146	278	150W	A, A+, B, D, E, F, G	Chrome	96	183	100W	A, A+, B, D, E, F, G
1200	500	470	95	80	10	3.1	6.9	Coloured	193	366	300W	A, A+, B, D, E, F, G	Chrome	125	239	150W	A, A+, B, D, E, F, G
1200	600	570	95	80	10	3.4	7.1	Coloured	221	419	300W	A, A+, B, D, E, F, G	Chrome	143	275	150W	A, A+, B, D, E, F, G
1800	500	470	95	80	15	4.7	10.3	Coloured	290	548	450W	A, A+, B, D, E, F, G	Chrome	189	363	300W	A, A+, B, D, E, F, G
1800	600	570	95	80	15	5.1	11	Coloured	332	628	450W	A, A+, B, D, E, F, G	Chrome	217	416	300W	A, A+, B, D, E, F, G

Watts to BTU conversion multiple is 3.41

TUSCAN SQUARE MULTIRAIL - MULTIRAIL RANGE

Tuscan Square Multirail

Height H (mm)	Width W (mm)	Tappings C (mm)	Distance from wall - D (mm)	Tappings from wall - A (mm)	Tube Qty	Water Content L	Weight KG	Colour	▲T30 Watts	▲T50 Watts	Element Output	Element Type	Colour	▲T30 Watts	▲T50 Watts	Element Output	Element Type
800	500	470	95	80	13	2.94	8.53	Coloured	171	334	150W	A, A+, B, D, E, F, G	Chrome	109	215	150W	A, A+, B, D, E, F, G
800	600	570	95	80	13	3.34	10.22	Coloured	200	391	300W	A, A+, B, D, E, F, G	Chrome	125	248	150W	A, A+, B, D, E, F, G
1200	500	470	95	80	22	4.75	11.9	Coloured	271	523	450W	A, A+, B, D, E, F, G	Chrome	171	335	300W	A, A+, B, D, E, F, G
1200	600	570	95	80	22	5.43	13.9	Coloured	318	613	450W	A, A+, B, D, E, F, G	Chrome	197	386	300W	A, A+, B, D, E, F, G
1800	500	470	95	80	31	6.85	16.89	Coloured	412	780	600W	A, A+, B, D, E, F, G	Chrome	262	509	450W	A, A+, B, D, E, F, G
1800	600	570	95	80	31	7.81	19.4	Coloured	482	913	600W	A, A+, B, D, E, F, G	Chrome	302	587	450W	A, A+, B, D, E, F, G

Watts to BTU conversion multiple is 3.41

LAUNTON - THE MULTIRAIL RANGE

Launton

Height H (mm)	Width W (mm)	Tappings C (mm)	Distance from wall - D (mm)	Tappings from wall - A (mm)	Tube Qty	Water Content L	Weight KG	Colour	▲T30 Watts	▲T50 Watts	Element Output	Element Type	Colour	▲T30 Watts	▲T50 Watts	Element Output	Element Type
1200	500	470	255-270	70-85	11	4	8.3	Coloured	235	444	150W	A, A+, B, D, E, F, G	Chrome	155	293	150W	A, A+, B, D, E, F, G
1200	600	570	255-270	70-85	11	4.4	9.3	Coloured	268	502	300W	A, A+, B, D, E, F, G	Chrome	176	334	150W	A, A+, B, D, E, F, G

Watts to BTU conversion multiple is 3.41

HADDENHAM - THE MULTIRAIL RANGE

Haddenham

Height H (mm)	Width W (mm)	Tappings C (mm)	Distance from wall - D (mm)	Tappings from wall - A (mm)	Tube Qty	Water Content L	Weight KG	Colour	▲T30 Watts	▲T50 Watts	Element Output	Element Type	Colour	▲T30 Watts	▲T50 Watts	Element Output	Element Type
1200	500	455	255-270	70-85	25	6.1	9.5	Coloured	302	574	N/A	N/A	Chrome	199	388	N/A	N/A
1200	600	555	255-270	70-85	25	6.9	10.8	Coloured	356	676	N/A	N/A	Chrome	239	458	N/A	N/A

Watts to BTU conversion multiple is 3.41

Tuscan Square

Tuscan Square Multirail

Launton

Haddenham

Technical Tables & Drawings

TUSCAN SQUARE

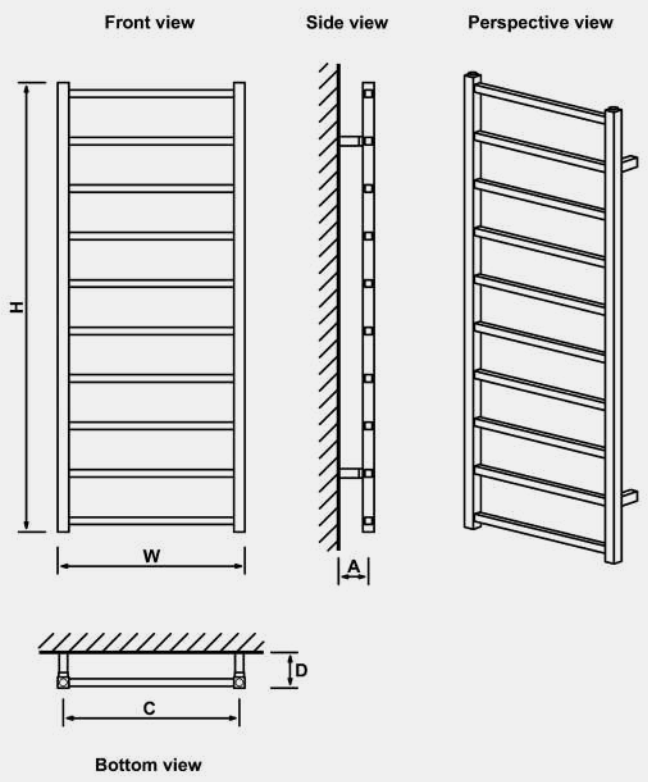

TUSCAN SQUARE MULTIRAIL

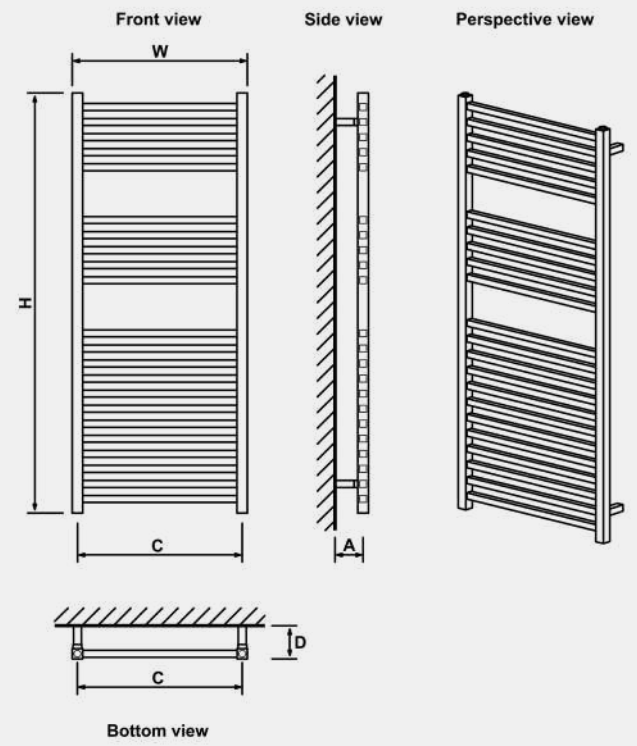

LAUNTON

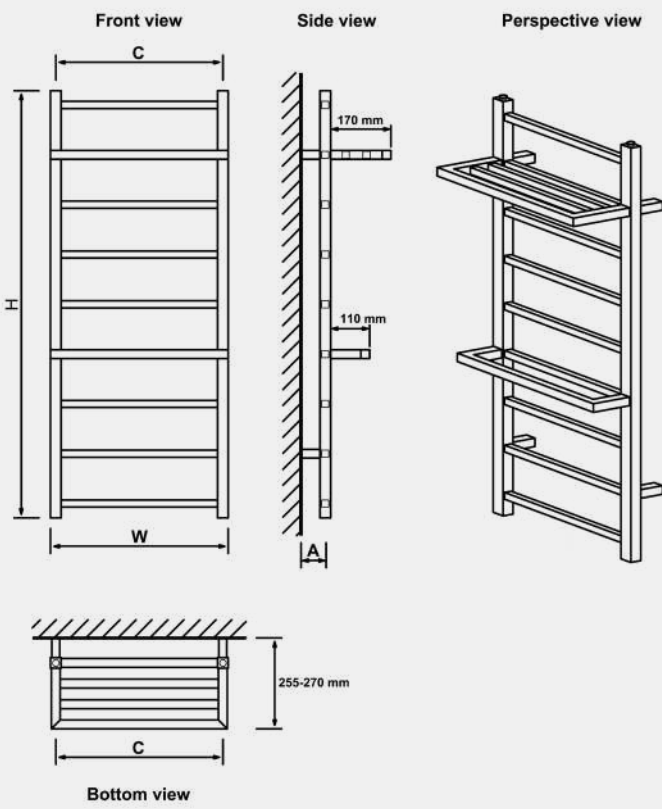

HADDENHAM

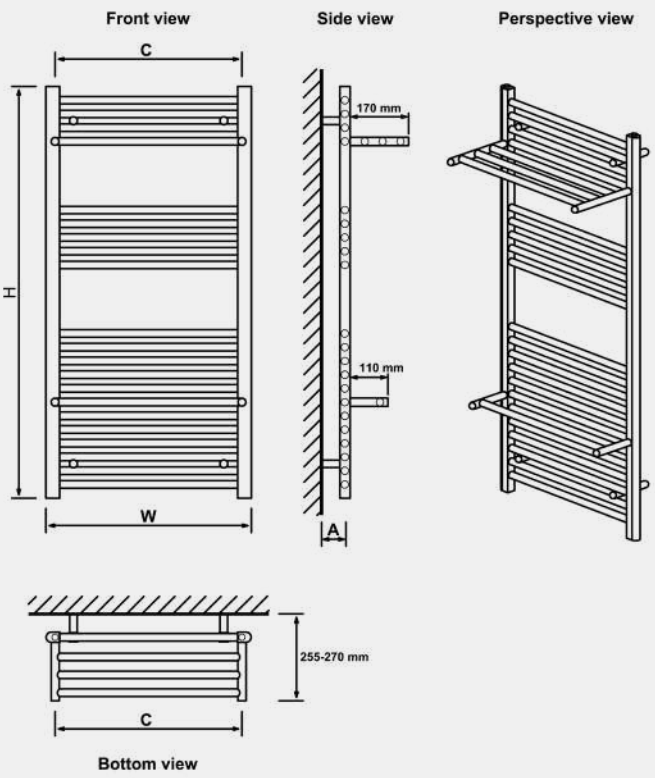

Technical Tables & Drawings

CORTONA ELECTRIC - ALL ELECTRIC RANGE

Cortona Electric

Height H (mm)	Width W (mm)	Tappings C (mm)	Radiator thickness (mm)	Distance from wall - D (mm)	Tube Qty	Water Content L	Weight KG	Colour	Watts	BTU	Element Output	Element Type	Colour	Watts	BTU	Element Output	Element Type
465	520	N/A	75	101	N/A	N/A	8.5	Coloured	600	2047	N/A	N/A	-	-	-	-	-
465	650	N/A	75	101	N/A	N/A	11.3	Coloured	800	2730	N/A	N/A	-	-	-	-	-
465	770	N/A	75	101	N/A	N/A	14	Coloured	1000	3412	N/A	N/A	-	-	-	-	-

* Front glass height is 465mm. When radiator is used as floor standing, total height will be 510mm

DERWENT ALUMINIUM DRY ELEMENT - ALL ELECTRIC RANGE

Derwent Aluminium Dry Element

Height H (mm)	Width W (mm)	Tappings C (mm)	Distance from wall - D (mm)	Tappings from wall - A (mm)	Tube Qty	Water Content L	Weight KG	Colour	Watts	BTU	Element Output	Element Type	Colour	Watts	BTU	Element Output	Element Type
1800	304	N/A	115	N/A	3	N/A	8.5	Coloured	600	2047	N/A	N/A	-	-	-	-	-
1800	404	N/A	115	N/A	4	N/A	11.3	Coloured	800	2730	N/A	N/A	-	-	-	-	-
1800	504	N/A	115	N/A	5	N/A	14	Coloured	1000	3412	N/A	N/A	-	-	-	-	-
1800	604	N/A	115	N/A	6	N/A	21	Coloured	1200	4094	N/A	N/A	-	-	-	-	-

BIAVA DRY ELEMENT - ALL ELECTRIC RANGE

Biava Dry Element

Height H (mm)	Width W (mm)	Tappings C (mm)	Distance from wall - D (mm)	Tappings from wall - A (mm)	Tube Qty	Water Content L	Weight KG	Colour	Watts	BTU	Element Output	Element Type	Colour	Watts	BTU	Element Output	Element Type
700	500	N/A	99-115	N/A	12	N/A	5.3	Coloured	250	853	N/A	N/A	Chrome	250	853	N/A	N/A
700	600	N/A	99-115	N/A	12	N/A	5.5	Coloured	300	1024	N/A	N/A	Chrome	300	1024	N/A	N/A
1100	500	N/A	99-115	N/A	20	N/A	7.5	Coloured	400	1365	N/A	N/A	Chrome	400	1365	N/A	N/A
1100	600	N/A	99-115	N/A	20	N/A	8.4	Coloured	500	1706	N/A	N/A	Chrome	500	1706	N/A	N/A

Cortona Electric

Derwent Dry Element

Biava Dry Element

Technical Tables & Drawings

CORTONA

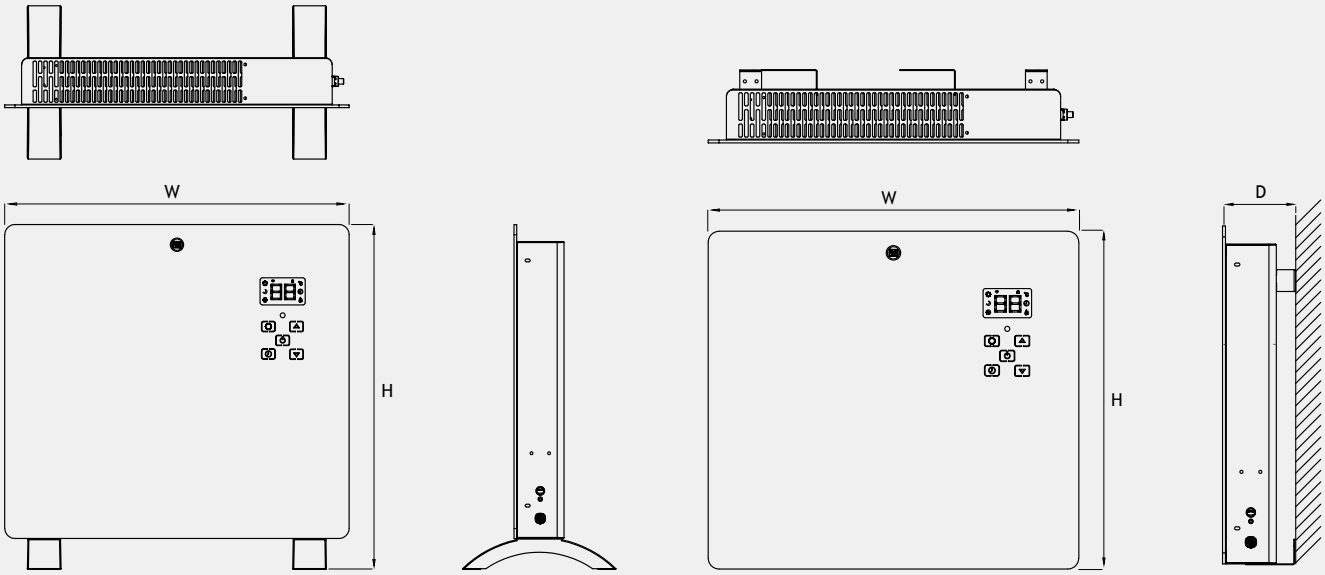

DERWENT DRY ELEMENT

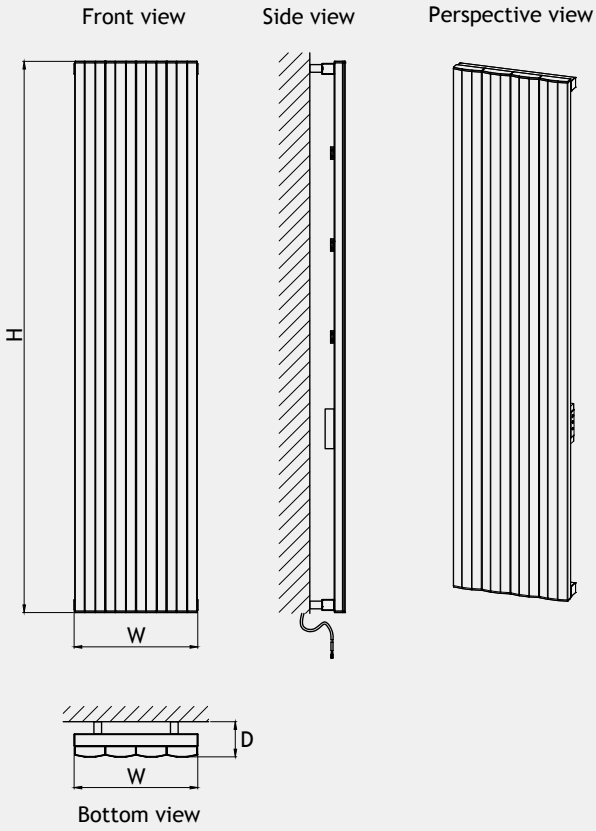

BIAVA DRY ELEMENT

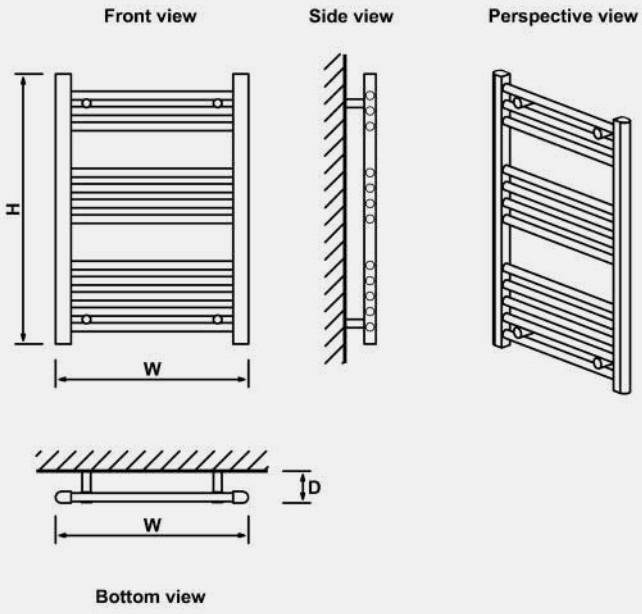

Technical Tables & Drawings

BROCKWORTH ALL ELECTRIC - DESIGNER RANGE

Brockworth All Electric

Height H (mm)	Width W (mm)	Tappings C (mm)	Tappings from wall - A (mm)	Distance from wall - D (mm)	Tube Qty	Water Content L	Weight KG	Colour	Watts	BTU	Element Output	Element Type	Colour	Watts	BTU	Element Output	Element Type
1200	500	N/A	N/A	96-106	12	5.04	17.27	Coloured	700	2387	700W	Type B Wi-Fi	-	-	-	-	-

LODDON DRY ELEMENT - ALL ELECTRIC RANGE

Loddon Dry Element

Height H (mm)	Width W (mm)	Tappings C (mm)	Distance from wall - D (mm)	Tappings from wall - A (mm)	Tube Qty	Water Content L	Weight KG	Colour	Watts	BTU	Element Output	Element Type	Colour	Watts	BTU	Element Output	Element Type
800*	500	N/A	100	N/A	9	N/A	6.65	Coloured	300	1024	N/A	N/A	Chrome	300	1024	N/A	N/A
800*	600	N/A	100	N/A	9	N/A	7.17	Coloured	350	1195	N/A	N/A	Chrome	350	1195	N/A	N/A
1200	500	N/A	100	N/A	15	N/A	10	Coloured	450	1536	N/A	N/A	Chrome	450	1536	N/A	N/A
1200	600	N/A	100	N/A	15	N/A	10.64	Coloured	500	1707	N/A	N/A	Chrome	500	1707	N/A	N/A

* The total height of this rail is 780mm

KENNET DRY ELEMENT - ALL ELECTRIC RANGE

Kennet Dry Element

Height H (mm)	Width W (mm)	Tappings C (mm)	Distance from wall - D (mm)	Tappings from wall - A (mm)	Tube Qty	Water Content L	Weight KG	Colour	Watts	BTU	Element Output	Element Type	Colour	Watts	BTU	Element Output	Element Type
700*	500	N/A	130	N/A	3	N/A	7.47	Coloured	120	410	N/A	N/A	Chrome	120	410	N/A	N/A
700*	600	N/A	130	N/A	3	N/A	8.52	Coloured	150	512	N/A	N/A	Chrome	150	512	N/A	N/A
1200**	500	N/A	130	N/A	5	N/A	12.1	Coloured	200	683	N/A	N/A	Chrome	200	683	N/A	N/A
1200**	600	N/A	130	N/A	5	N/A	13.66	Coloured	230	785	N/A	N/A	Chrome	230	785	N/A	N/A

* Height shown excludes bottom control leg. Total height is 744.5mm ** Height shown excludes bottom control leg. Total height is 1253mm

WENDOVER STRAIGHT - STAINLESS STEEL RANGE

Wendover Straight Stainless Steel

Height H (mm)	Width W (mm)	Tappings C (mm)	Distance from wall - D (mm)	Tappings from wall - A (mm)	Tube Qty	Water Content L	Weight KG	Colour	Watts	BTU	Element Output	Element Type	Colour	Watts	BTU	Element Output	Element Type
800	400	350	90-115	75-100	12	2.70	4.88	Polished	92	175	100W	A, A+, B, D, E, F, G	Brushed	97	182	100W	A, A+, B, D, E, F, G
800	500	450	90-115	75-100	12	3.08	5.20	Polished	108	206	150W	A, A+, B, D, E, F, G	Brushed	115	214	150W	A, A+, B, D, E, F, G
800	600	550	90-115	75-100	12	3.47	5.82	Polished	125	237	150W	A, A+, B, D, E, F, G	Brushed	133	247	150W	A, A+, B, D, E, F, G
1000	400	350	90-115	75-100	14	3.20	5.84	Polished	111	215	150W	A, A+, B, D, E, F, G	Brushed	118	224	150W	A, A+, B, D, E, F, G
1000	500	450	90-115	75-100	14	3.70	6.57	Polished	131	254	150W	A, A+, B, D, E, F, G	Brushed	139	264	150W	A, A+, B, D, E, F, G
1000	600	550	90-115	75-100	14	4.10	7.32	Polished	151	293	150W	A, A+, B, D, E, F, G	Brushed	161	305	150W	A, A+, B, D, E, F, G
1200	400	350	90-115	75-100	18	4.00	6.93	Polished	132	259	150W	A, A+, B, D, E, F, G	Brushed	140	270	150W	A, A+, B, D, E, F, G
1200	500	450	90-115	75-100	18	4.63	7.48	Polished	157	309	300W	A, A+, B, D, E, F, G	Brushed	167	322	300W	A, A+, B, D, E, F, G
1200	600	550	90-115	75-100	18	5.20	8.41	Polished	181	358	300W	A, A+, B, D, E, F, G	Brushed	193	374	300W	A, A+, B, D, E, F, G
1400	400	350	90-115	75-100	22	4.80	8.21	Polished	157	308	300W	A, A+, B, D, E, F, G	Brushed	167	321	300W	A, A+, B, D, E, F, G
1400	500	450	90-115	75-100	22	5.50	9.31	Polished	189	370	300W	A, A+, B, D, E, F, G	Brushed	201	386	300W	A, A+, B, D, E, F, G
1400	600	550	90-115	75-100	22	6.20	10.50	Polished	221	431	300W	A, A+, B, D, E, F, G	Brushed	236	451	300W	A, A+, B, D, E, F, G
1600	400	350	90-115	75-100	24	5.40	8.89	Polished	181	356	300W	A, A+, B, D, E, F, G	Brushed	193	372	300W	A, A+, B, D, E, F, G
1600	500	450	90-115	75-100	24	6.10	10.8	Polished	219	428	300W	A, A+, B, D, E, F, G	Brushed	234	447	300W	A, A+, B, D, E, F, G
1600	600	550	90-115	75-100	24	6.90	11.44	Polished	257	500	300W	A, A+, B, D, E, F, G	Brushed	275	523	300W	A, A+, B, D, E, F, G
1800	400	350	90-115	75-100	28	6.10	10.09	Polished	206	406	300W	A, A+, B, D, E, F, G	Brushed	220	424	300W	A, A+, B, D, E, F, G
1800	500	450	90-115	75-100	28	7.08	11.11	Polished	249	486	450W	A, A+, B, D, E, F, G	Brushed	267	509	450W	A, A+, B, D, E, F, G
1800	600	550	90-115	75-100	28	7.97	12.56	Polished	293	567	450W	A, A+, B, D, E, F, G	Brushed	314	594	450W	A, A+, B, D, E, F, G

Watts to BTU conversion multiple is 3.41

Brockworth All Electric

Loddon Dry Element

Kennet Dry Element

Wendover Straight Stainless Steel

Technical Tables & Drawings

BROCKWORTH ALL ELECTRIC

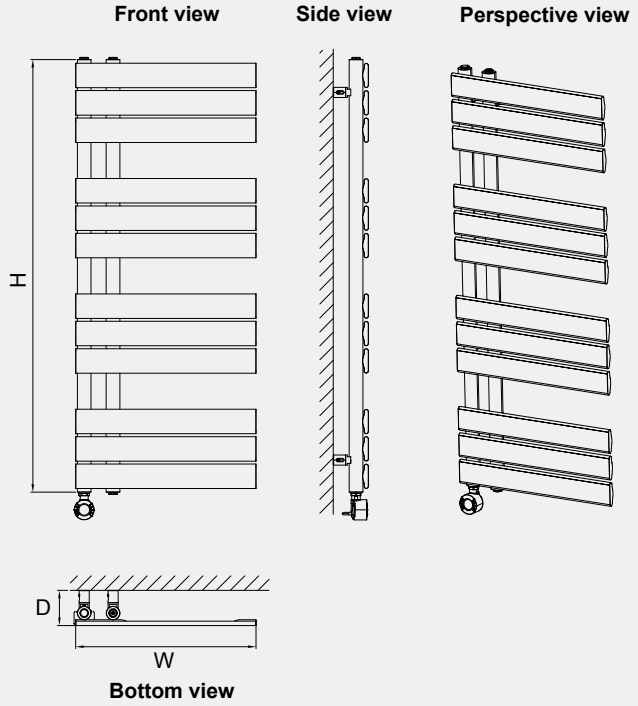

LODDON DRY ELEMENT

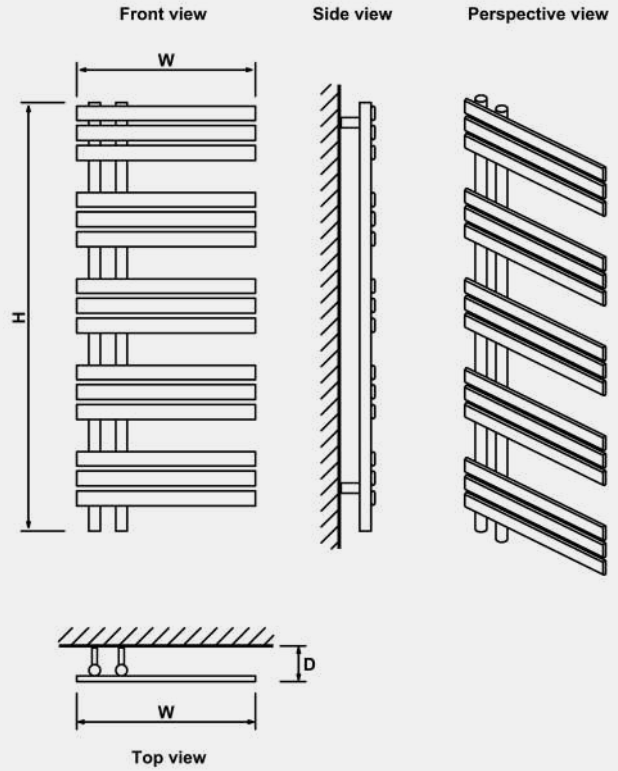

KENNET DRY ELEMENT

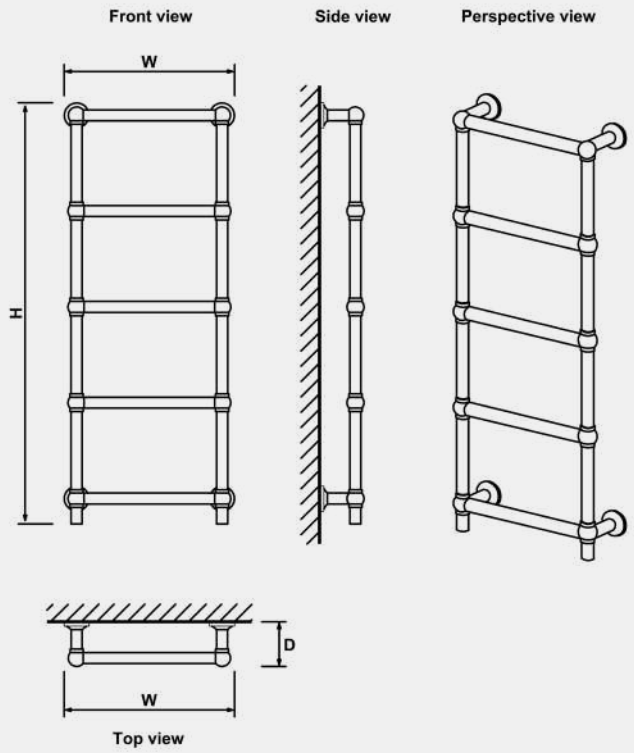

WENDOVER STRAIGHT STAINLESS STEEL

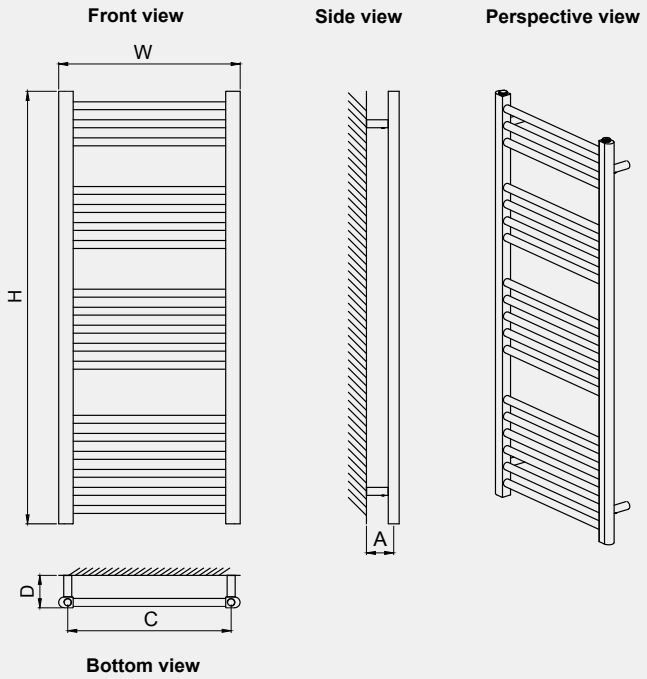

Technical Tables & Drawings

VIOLLA II - STAINLESS STEEL RANGE

Viola II Stainless Steel

Height H (mm)	Width W (mm)	Tappings C (mm)	Distance from wall - D (mm)	Tappings from wall - A (mm)	Tube Qty	Water Content L	Weight KG	Colour	Watts*	BTU*	Element Output	Element Type	Colour	Watts*	BTU*	Element Output	Element Type
790	500	468	92-117	76-101	9	1.93	3.43	Polished	90	172	100W	A, A+, B, D, E, F, G	Brushed	95	181	100W	A, A+, B, D, E, F, G
790	600	568	92-117	76-101	9	2.13	3.76	Polished	104	200	150W	A, A+, B, D, E, F, G	Brushed	110	210	150W	A, A+, B, D, E, F, G
1210	500	468	92-117	76-101	15	3.08	5.18	Polished	145	277	150W	A, A+, B, D, E, F, G	Brushed	153	291	150W	A, A+, B, D, E, F, G
1210	600	568	92-117	76-101	15	3.42	5.73	Polished	169	321	150W	A, A+, B, D, E, F, G	Brushed	178	338	150W	A, A+, B, D, E, F, G
1630	500	468	92-117	76-101	19	4.03	6.61	Polished	200	376	150W	A, A+, B, D, E, F, G	Brushed	210	395	150W	A, A+, B, D, E, F, G
1630	600	568	92-117	76-101	19	4.46	7.30	Polished	232	436	300W	A, A+, B, D, E, F, G	Brushed	244	458	300W	A, A+, B, D, E, F, G

* Further heat output information available on eastbrooktrade.com **E&OA**

Watts to BTU conversion multiple is 3.41

VELINO - STAINLESS STEEL RANGE

Velino Stainless Steel

Height H (mm)	Width W (mm)	Tappings C (mm)	Distance from wall - D (mm)	Tappings from wall - A (mm)	Tube Qty	Water Content L	Weight KG	Colour	Watts*	BTU*	Element Output	Element Type	Colour	Watts*	BTU*	Element Output	Element Type
800	500	465	290	97.5	11	2.94	4.70	Polished	125	235	150W	A, A+, B, D, E, F, G	Brushed	132	247	150W	A, A+, B, D, E, F, G
800	600	565	290	97.5	11	3.19	5.10	Polished	143	268	150W	A, A+, B, D, E, F, G	Brushed	151	282	150W	A, A+, B, D, E, F, G
1200	500	465	290	97.5	14	4.05	6.20	Polished	167	317	150W	A, A+, B, D, E, F, G	Brushed	176	333	150W	A, A+, B, D, E, F, G
1200	600	565	290	97.5	14	4.37	6.80	Polished	189	358	300W	A, A+, B, D, E, F, G	Brushed	199	376	300W	A, A+, B, D, E, F, G

* Further heat output information available on eastbrooktrade.com **E&OA**

Watts to BTU conversion multiple is 3.41

RIZANO - STAINLESS STEEL RANGE

Rizano

Height H (mm)	Width W (mm)	Tappings C (mm)	Distance from wall - D (mm)	Tappings from wall - A (mm)	Tube Qty	Water Content L	Weight KG	Colour	▲T30 Watts	▲T50 Watts	Element Output	Element Type
1000	500	50	95	65	15	3.5	7.5	Polished	133	262	300W	A, A+, B, D, E
1000	600	50	95	65	15	4.1	9.6	Polished	157	307	300W	A, A+, B, D, E

Watts to BTU conversion multiple is 3.41

WARRINGTON TYPE 10 HORIZONTAL - DESIGNER RANGE

Warrington Type 10 - Horizontal

Height H (mm)	Width W (mm)	Tappings C (mm)	Tappings from wall - A (mm)	Distance from wall - D (mm)	Tube Qty	Water Content L	Weight KG	Colour	▲T30 Watts	▲T50 Watts	Element Output	Element Type	Colour	▲T30 Watts	▲T50 Watts	Element Output	Element Type
600	452	452	51	84	6	-	7.20	Coloured	169	321	N/A	N/A	-	-	-	-	-
600	604	604	51	84	8	-	9.50	Coloured	225	427	N/A	N/A	-	-	-	-	-
600	832	832	51	84	11	-	13.10	Coloured	310	588	N/A	N/A	-	-	-	-	-
600	1060	1060	51	84	14	-	16.60	Coloured	394	748	N/A	N/A	-	-	-	-	-
600	1212	1212	51	84	16	-	19.00	Coloured	450	854	N/A	N/A	-	-	-	-	-
600	1440	1440	51	84	19	-	23.00	Coloured	535	1015	N/A	N/A	-	-	-	-	-
600	1668	1668	51	84	22	-	26.60	Coloured	619	1175	N/A	N/A	-	-	-	-	-

Watts to BTU conversion multiple is 3.41

Viola II

Velino

Rizano

Warrington Type 10 Horizontal

Technical Tables & Drawings

VIOLLA II

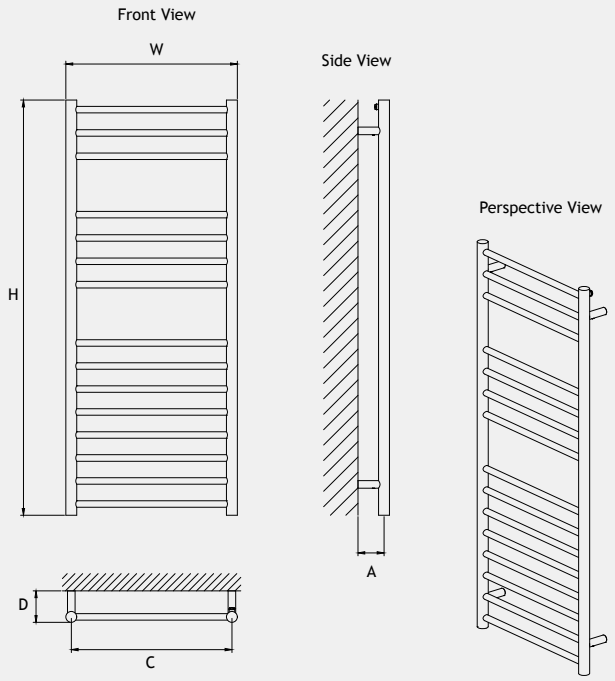

VELINO

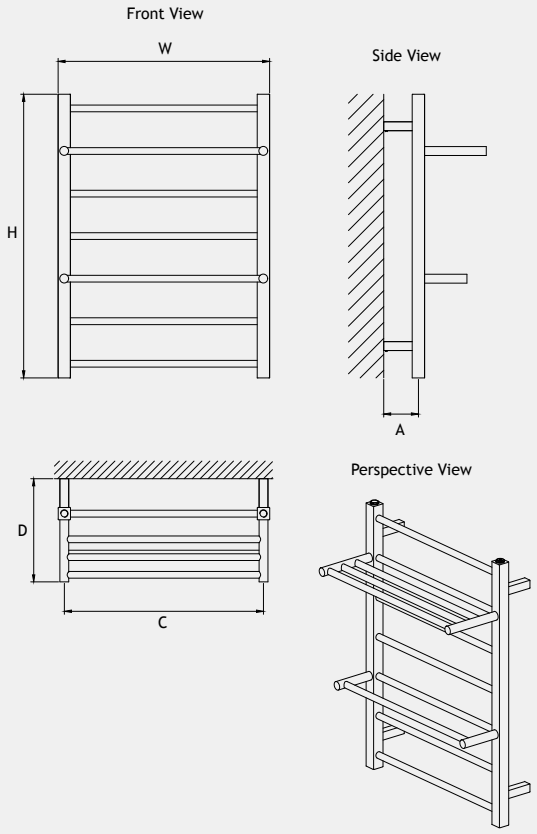

RIZANO

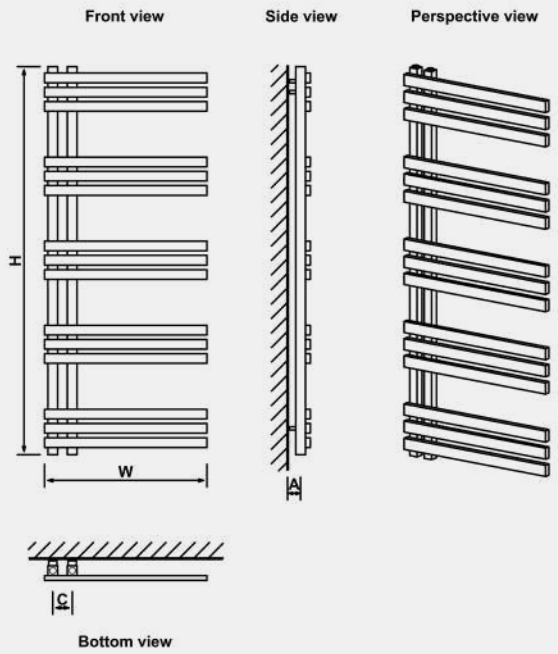

WARRINGTON TYPE 10 HORIZONTAL

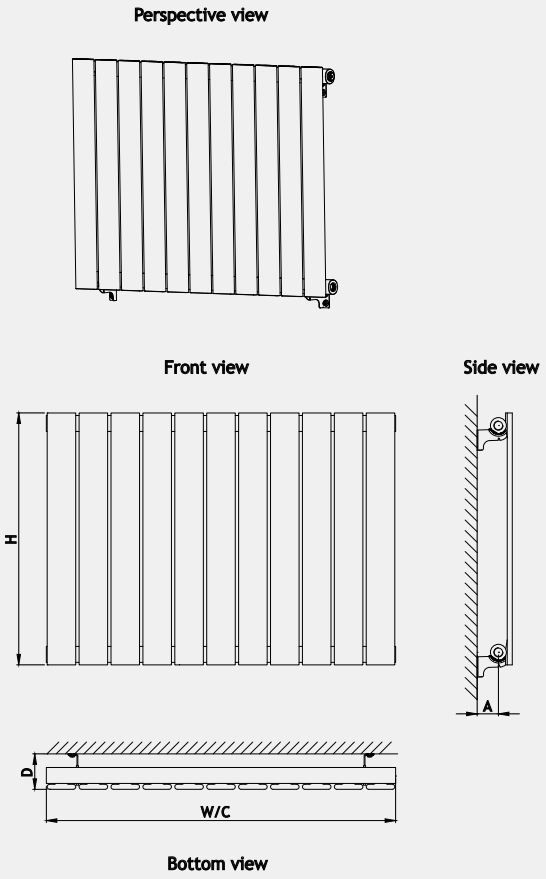

Technical Tables & Drawings

WARRINGTON TYPE 10 VERTICAL - DESIGNER RANGE

Warrington Type 10 - Vertical

Height H (mm)	Width W (mm)	Tappings C (mm)	Tappings from wall - A (mm)	Distance from wall - D (mm)	Tube Qty	Water Content L	Weight KG	Colour	▲T30 Watts	▲T50 Watts	Element Output	Element Type	Colour	▲T30 Watts	▲T50 Watts	Element Output	Element Type
1500	300	300	51	84	4	3.65	10.78	Coloured	258	490	N/A	N/A	Chrome	151	293	N/A	N/A
1500	376	376	51	84	5	4.57	13.45	Coloured	322	612	N/A	N/A	Chrome	188	366	N/A	N/A
1500	452	452	51	84	6	5.48	16.12	Coloured	387	735	N/A	N/A	Chrome	226	439	N/A	N/A
1500	528	528	51	84	7	6.40	18.79	Coloured	451	857	N/A	N/A	Chrome	263	512	N/A	N/A
1500	604	604	51	84	8	7.31	21.47	Coloured	516	980	N/A	N/A	Chrome	301	585	N/A	N/A
1500	680	680	51	84	9	8.23	24.14	Coloured	580	1102	N/A	N/A	-	-	-	-	-
1800	300	300	51	84	4	4.26	12.73	Coloured	322	616	N/A	N/A	Chrome	192*	383*	N/A	N/A
1800	376	376	51	84	5	5.33	15.90	Coloured	403	769	N/A	N/A	Chrome	240*	479*	N/A	N/A
1800	452	452	51	84	6	6.40	19.06	Coloured	483	923	N/A	N/A	Chrome	288*	575*	N/A	N/A
1800	528	528	51	84	7	7.47	22.22	Coloured	564	1077	N/A	N/A	Chrome	336*	670*	N/A	N/A
1800	604	604	51	84	8	8.54	25.38	Coloured	644	1231	N/A	N/A	Chrome	384*	766*	N/A	N/A
1800	680	680	51	84	9	-	28.50	Coloured	725	1385	N/A	N/A	-	-	-	-	-

* Further heat output information available on eastbrooktrade.com **E&OA**

Watts to BTU conversion multiple is 3.41

Warrington Type 10 - Vertical

Height H (mm)	Width W (mm)	Tappings C (mm)	Tappings from wall - A (mm)	Distance from wall - D (mm)	Tube Qty	Water Content L	Weight KG	Colour	▲T30 Watts*	▲T50 Watts*	Element Output	Element Type	Colour	▲T30 Watts	▲T50 Watts	Element Output	Element Type
1500	300	300	51	84	4	3.65	10.78	PVD Finish	151	293	N/A	N/A	-	-	-	-	-
1500	376	376	51	84	5	4.57	13.45	PVD Finish	188	366	N/A	N/A	-	-	-	-	-
1500	452	452	51	84	6	5.48	16.12	PVD Finish	226	439	N/A	N/A	-	-	-	-	-
1500	528	528	51	84	7	6.40	18.79	PVD Finish	263	512	N/A	N/A	-	-	-	-	-
1500	604	604	51	84	8	7.31	21.47	PVD Finish	301	585	N/A	N/A	-	-	-	-	-
1800	300	300	51	84	4	4.26	12.73	PVD Finish	192	383	N/A	N/A	-	-	-	-	-
1800	376	376	51	84	5	5.33	15.90	PVD Finish	240	479	N/A	N/A	-	-	-	-	-
1800	452	452	51	84	6	6.40	19.06	PVD Finish	288	575	N/A	N/A	-	-	-	-	-
1800	528	528	51	84	7	7.47	22.22	PVD Finish	336	670	N/A	N/A	-	-	-	-	-
1800	604	604	51	84	8	8.54	25.38	PVD Finish	384	766	N/A	N/A	-	-	-	-	-

PVD Finish is Brushed Brass. * Further heat output information available on eastbrooktrade.com **E&OA**

Watts to BTU conversion multiple is 3.41

WARRINGTON TYPE 20 HORIZONTAL - DESIGNER RANGE

Warrington Type 20 - Horizontal

Height H (mm)	Width W (mm)	Tappings C (mm)	Tappings from wall - A (mm)	Distance from wall - D (mm)	Tube Qty	Water Content L	Weight KG	Colour	▲T30 Watts	▲T50 Watts	Element Output	Element Type	Colour	▲T30 Watts	▲T50 Watts	Element Output	Element Type
600	456	456	51	84	12	-	13.2	Coloured	268	510	N/A	N/A	-	-	-	-	-
600	608	608	51	84	16	-	17.6	Coloured	358	680	N/A	N/A	-	-	-	-	-
600	836	836	51	84	22	-	24.2	Coloured	492	935	N/A	N/A	-	-	-	-	-
600	1064	1064	51	84	28	-	30.8	Coloured	626	1190	N/A	N/A	-	-	-	-	-
600	1216	1216	51	84	32	-	35.2	Coloured	715	1360	N/A	N/A	-	-	-	-	-
600	1444	1444	51	84	38	-	42.5	Coloured	849	1615	N/A	N/A	-	-	-	-	-
600	1672	1672	51	84	44	-	49.2	Coloured	983	1870	N/A	N/A	-	-	-	-	-

Watts to BTU conversion multiple is 3.41

WARRINGTON TYPE 20 VERTICAL - DESIGNER RANGE

Warrington Type 20 - Vertical

Height H (mm)	Width W (mm)	Tappings C (mm)	Tappings from wall - A (mm)	Distance from wall - D (mm)	Tube Qty	Water Content L	Weight KG	Colour	▲T30 Watts	▲T50 Watts	Element Output	Element Type	Colour	▲T30 Watts	▲T50 Watts	Element Output	Element Type
1500	304	304	51	84	8	7.06	20.77	Coloured	372	721	N/A	N/A	-	-	-	-	-
1500	380	380	51	84	10	8.83	25.94	Coloured	466	902	N/A	N/A	-	-	-	-	-
1500	456	456	51	84	12	10.60	31.10	Coloured	559	1082	N/A	N/A	-	-	-	-	-
1500	532	532	51	84	14	12.37	36.27	Coloured	652	1262	N/A	N/A	-	-	-	-	-
1500	608	608	51	84	16	14.13	41.44	Coloured	745	1443	N/A	N/A	-	-	-	-	-
1500	684	684	51	84	18	15.90	46.60	Coloured	838	1623	N/A	N/A	-	-	-	-	-
1800	304	304	51	84	8	-	24.50	Coloured	468	902	N/A	N/A	-	-	-	-	-
1800	380	380	51	84	10	-	30.60	Coloured	584	1127	N/A	N/A	-	-	-	-	-
1800	456	456	51	84	12	-	36.70	Coloured	701	1352	N/A	N/A	-	-	-	-	-
1800	532	532	51	84	14	-	42.80	Coloured	818	1578	N/A	N/A	-	-	-	-	-
1800	608	608	51	84	16	-	48.90	Coloured	935	1803	N/A	N/A	-	-	-	-	-
1800	684	684	51	84	18	-	55.40	Coloured	1052	2028	N/A	N/A	-	-	-	-	-

Watts to BTU conversion multiple is 3.41

Technical Tables & Drawings

WARRINGTON TYPE 10 VERTICAL

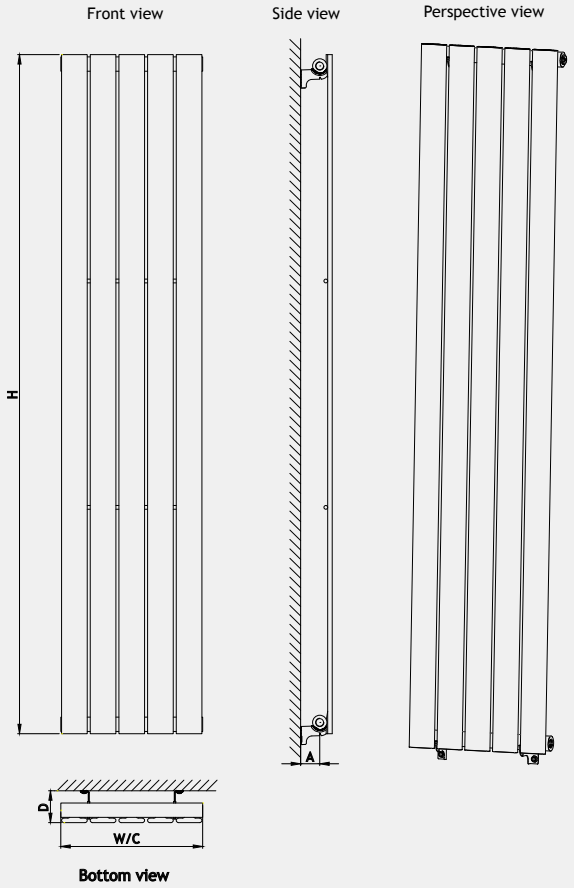

WARRINGTON TYPE 20 HORIZONTAL

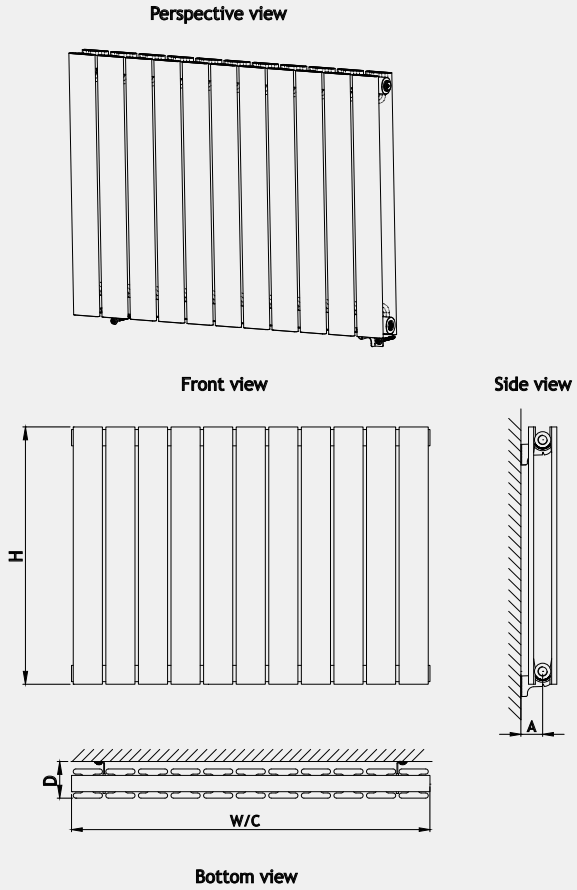

WARRINGTON TYPE 20 VERTICAL

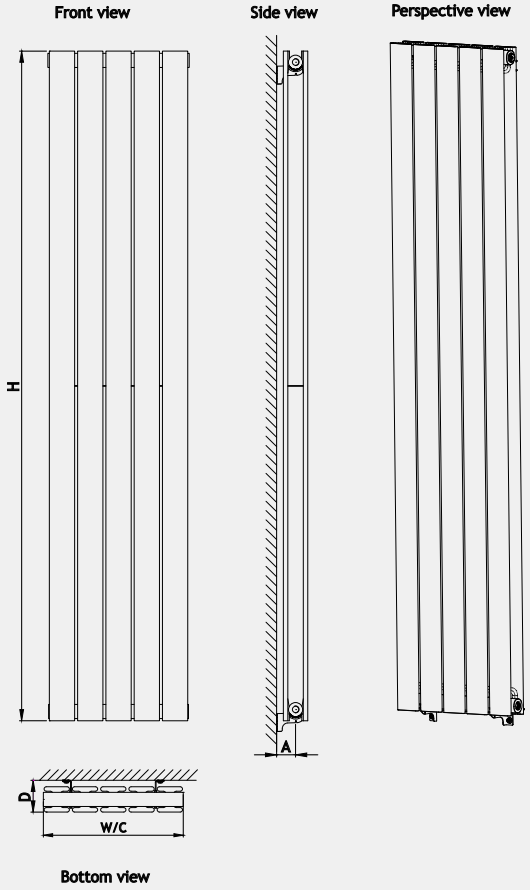

Technical Tables & Drawings

LEONARDO - DESIGNER RANGE

Leonardo

Height H (mm)	Width W (mm)	Tappings C (mm)	Tappings from wall - A (mm)	Distance from wall - D (mm)	Tube Qty	Water Content L	Weight KG	Colour	▲T30 Watts	▲T50 Watts	Element Output	Element Type	Colour	▲T30 Watts	▲T50 Watts	Element Output	Element Type
600	400	80	63-73	97-112	8	2.36	6.16	Chrome	68	135	150W	A, A+, B, D, E, F, G	-	-	-	-	-
600	500	80	63-73	97-112	8	2.71	8.95	Chrome	82	162	150W	A, A+, B, D, E, F, G	-	-	-	-	-
600	600	80	63-73	97-112	8	3.06	7.99	Chrome	95	189	150W	A, A+, B, D, E, F, G	-	-	-	-	-
688	500	80	63-73	97-112	9	3.07	7.87	Chrome	93	182	150W	A, A+, B, D, E, F, G	-	-	-	-	-
1200	400	80	63-73	97-112	15	4.54	10.92	Chrome	128	255	300W	A, A+, B, D, E, F, G	-	-	-	-	-
1200	500	80	63-73	97-112	15	5.2	12.63	Chrome	153	305	300W	A, A+, B, D, E, F, G	PVD Finish	184	366	300W	A, A+, B, D, E, F, G
1200	600	80	63-73	97-112	15	5.85	14.34	Chrome	175	350	300W	A, A+, B, D, E, F, G	PVD Finish	228	442	450W	A, A+, B, D, E, F, G
1450	500	80	63-73	97-112	18	6.25	15	Chrome	184	370	450W	A, A+, B, D, E, F, G	-	-	-	-	-
1800	400	80	63-73	97-112	21	6.55	15.19	Chrome	192	389	450W	A, A+, B, D, E, F, G	-	-	-	-	-
1800	500	80	63-73	97-112	21	7.47	17.59	Chrome	230	466	450W	A, A+, B, D, E, F, G	-	-	-	-	-
1800	600	80	63-73	97-112	21	8.39	19.99	Chrome	276	540	600W	A, A+, B, D, E, F, G	-	-	-	-	-

PVD Finish is Brushed Brass.

Watts to BTU conversion multiple is 3.41

STAVERTON TUBE ON TUBE STRAIGHT - DESIGNER RANGE

Staverton Tube on Tube - Straight

Height H (mm)	Width W (mm)	Tappings C (mm)	Tappings from wall - A (mm)	Distance from wall - D (mm)	Tube Qty	Water Content L	Weight KG	Colour	▲T30 Watts	▲T50 Watts	Element Output	Element Type	Colour	▲T30 Watts	▲T50 Watts	Element Output	Element Type
600	400	350	63-73	96-108	7	2.73	7.10	Coloured	139	260	150W	A, A+, B, D, E, F, G	Chrome	90	172	150W	A, A+, B, D, E, F, G
600	500	450	63-73	96-108	7	3.13	8.21	Coloured	166	310	150W	A, A+, B, D, E, F, G	Chrome	91	175	150W	A, A+, B, D, E, F, G
600	600	550	63-73	96-108	7	3.53	9.32	Coloured	193	358	300W	A, A+, B, D, E, F, G	Chrome	127	237	150W	A, A+, B, D, E, F, G
600	1000	950	73-83	96-108	7	5.13	13.76	-	-	-	-	-	Chrome	253*	485*	300W	A, A+, B, D, E, F, G
600	1200	1150	73-83	96-108	7	5.92	15.93	-	-	-	-	-	Chrome	217	405	300W	A, A+, B, D, E, F, G
800	1000	950	73-83	96-108	9	6.65	17.50	-	-	-	-	-	Chrome	200	389	450W	A, A+, B, D, E, F, G
800	1200	1150	73-83	96-108	9	7.67	20.23	-	-	-	-	-	Chrome	272	508	450W	A, A+, B, D, E, F, G
1200	400	350	63-73	96-108	12	5.01	11.95	Coloured	244	467	300W	A, A+, B, D, E, F, G	Chrome	146	283	300W	A, A+, B, D, E, F, G
1200	500	450	63-73	96-108	12	5.69	13.85	Coloured	295	556	450W	A, A+, B, D, E, F, G	Chrome	177	337	300W	A, A+, B, D, E, F, G
1200	600	550	63-73	96-108	12	6.38	15.75	Coloured	332	626	450W	A, A+, B, D, E, F, G	Chrome	215	412	300W	A, A+, B, D, E, F, G
1800	400	350	63-73	96-108	19	7.75	18.13	Coloured	373	702	600W	A, A+, B, D, E, F, G	Chrome	227	437	450W	A, A+, B, D, E, F, G
1800	500	450	63-73	96-108	19	8.82	21.14	Coloured	457	866	600W	A, A+, B, D, E, F, G	Chrome	243	470	450W	A, A+, B, D, E, F, G
1800	600	550	63-73	96-108	19	9.90	24.15	Coloured	515	975	750W	A, A+, B, D, E, F, G	Chrome	306	584	600W	A, A+, B, D, E, F, G

* Further heat output information available on eastbrooktrade.com **E&OA**

Watts to BTU conversion multiple is 3.41

STAVERTON TUBE ON TUBE STRAIGHT - DESIGNER RANGE

Staverton Tube on Tube - Straight

Height H (mm)	Width W (mm)	Tappings C (mm)	Tappings from wall - A (mm)	Distance from wall - D (mm)	Tube Qty	Water Content L	Weight KG	Colour	▲T30 Watts*	▲T50 Watts*	Element Output	Element Type	Colour	▲T30 Watts	▲T50 Watts	Element Output	Element Type
1200	500	450	63-73	96-108	12	5.69	13.85	PVD Finish	252	482	300W	A, A+, B, D, E, F, G	-	-	-	-	-
1200	600	550	63-73	96-108	12	6.38	15.75	PVD Finish	290	555	300W	A, A+, B, D, E, F, G	-	-	-	-	-

PVD Finish is Brushed Brass. * Further heat output information available on eastbrooktrade.com **E&OA**

Watts to BTU conversion multiple is 3.41

STAVERTON TUBE ON TUBE CURVED - DESIGNER RANGE

Staverton Tube on Tube - Curved

Height H (mm)	Width W (mm)	Tappings C (mm)	Tappings from wall - A (mm)	Distance from wall - D (mm)	Tube Qty	Water Content L	Weight KG	Colour	▲T30 Watts	▲T50 Watts	Element Output	Element Type	Colour	▲T30 Watts	▲T50 Watts	Element Output	Element Type
600	500	450	63-73	128-143	9	3.17	7.95	-	-	-	-	-	Chrome	100	190	150W	A, A+, B, D, E, F, G
600	600	550	63-73	128-143	9	3.57	8.98	-	-	-	-	-	Chrome	110	207	150W	A, A+, B, D, E, F, G
1200	500	450	63-73	128-143	17	6.12	14.36	-	-	-	-	-	Chrome	191	365	300W	A, A+, B, D, E, F, G
1200	600	550	63-73	128-143	17	6.87	16.3	-	-	-	-	-	Chrome	212	404	450W	A, A+, B, D, E, F, G
1800	500	450	63-73	128-143	25	9.07	20.77	-	-	-	-	-	Chrome	291	560	450W	A, A+, B, D, E, F, G
1800	600	550	63-73	128-143	25	10.17	23.63	-	-	-	-	-	Chrome	318	613	600W	A, A+, B, D, E, F, G

Watts to BTU conversion multiple is 3.41

Technical Tables & Drawings

LEONARDO

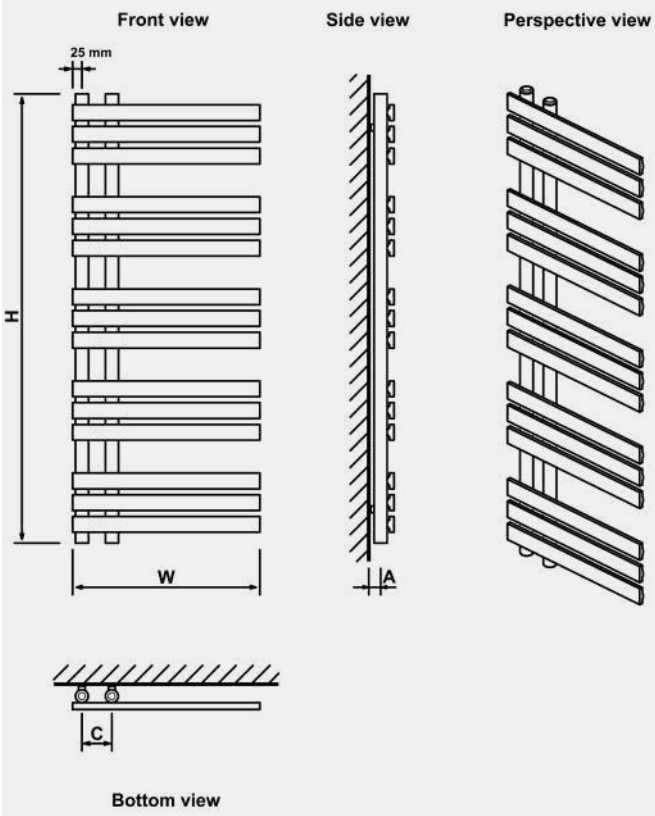

STAVERTON TUBE ON TUBE STRAIGHT

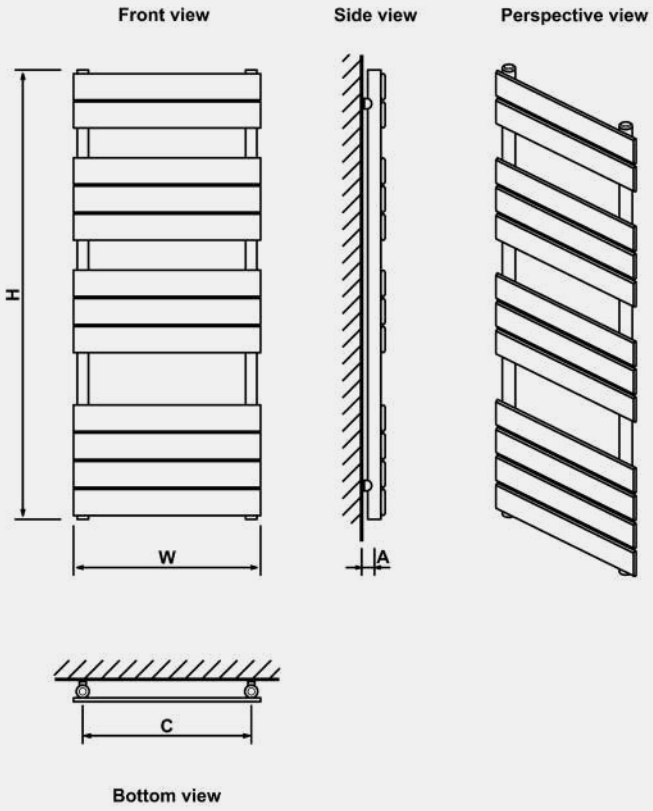

STAVERTON TUBE ON TUBE CURVED

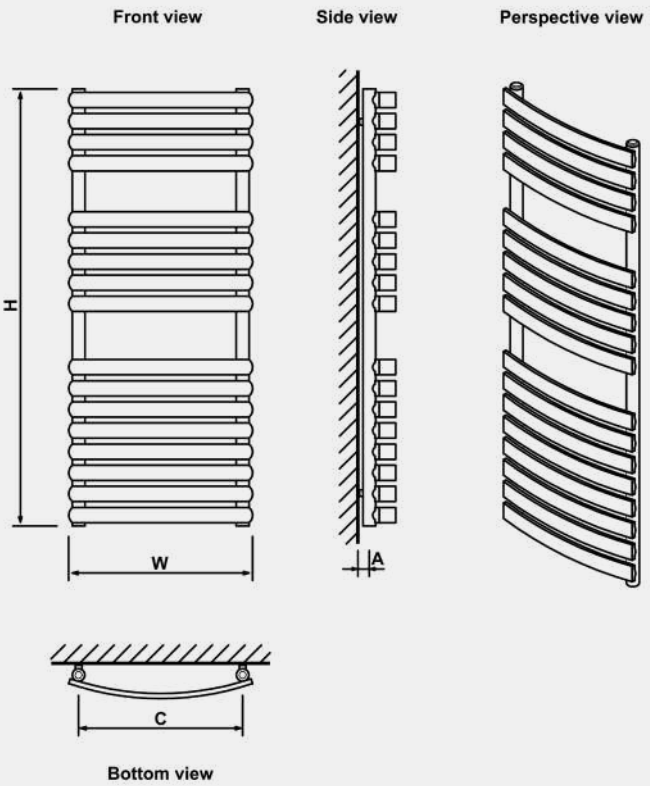

Technical Tables & Drawings

DEFFORD - DESIGNER RANGE

Defford

Height H (mm)	Width W (mm)	Tappings C (mm)	Distance from wall - D (mm)	Tappings from wall - A (mm)	Tube Qty	Water Content L	Weight KG	Colour	▲T30 Watts	▲T50 Watts	Element Output	Element Type	Colour	▲T30 Watts	▲T50 Watts	Element Output	Element Type
800	500	455	95	80	10	2.8	7.2	Coloured	169	322	150W	A, A+, B, D, E, F, G	Chrome	102	198	150W	A, A+, B, D, E, F, G
800	600	555	95	80	10	3	8.3	Coloured	195	371	150W	A, A+, B, D, E, F, G	Chrome	117	226	150W	A, A+, B, D, E, F, G
1200	500	455	95	80	16	4.3	11.2	Coloured	252	479	300W	A, A+, B, D, E, F, G	Chrome	151	293	150W	A, A+, B, D, E, F, G
1200	600	555	95	80	16	4.7	12.7	Coloured	291	553	450W	A, A+, B, D, E, F, G	Chrome	173	335	150W	A, A+, B, D, E, F, G
1800	500	455	95	80	22	6.2	15.1	Coloured	374	710	600W	A, A+, B, D, E, F, G	Chrome	225	438	300W	A, A+, B, D, E, F, G
1800	600	555	95	80	22	6.7	17.4	Coloured	432	819	600W	A, A+, B, D, E, F, G	Chrome	258	501	300W	A, A+, B, D, E, F, G

Watts to BTU conversion multiple is 3.41

STAVERTON - DESIGNER RANGE

Staverton

Height H (mm)	Width W (mm)	Tappings C (mm)	Tappings from wall - A (mm)	Distance from wall - D (mm)	Tube Qty	Water Content L	Weight KG	Colour	▲T30 Watts	▲T50 Watts	Element Output	Element Type	Colour	▲T30 Watts	▲T50 Watts	Element Output	Element Type
600	400	350	66-81	80-100	8	2.23	9.02	Coloured	113	213	150W	A,A+,B,D,E,F,G	Chrome	67	129	100W	A,A+,B,D,E,F,G
600	500	450	66-81	80-100	8	2.58	5.94	Coloured	136	257	150W	A,A+,B,D,E,F,G	Chrome	80	153	150W	A,A+,B,D,E,F,G
600	600	550	66-81	80-100	8	2.93	6.85	Coloured	159	299	150W	A,A+,B,D,E,F,G	Chrome	93	174	150W	A,A+,B,D,E,F,G
1200	400	350	66-81	80-100	16	4.45	9.61	Coloured	217	411	300W	A,A+,B,D,E,F,G	Chrome	141	268	150W	A,A+,B,D,E,F,G
1200	500	450	66-81	80-100	16	5.15	11.43	Coloured	261	495	300W	A,A+,B,D,E,F,G	Chrome	166	316	300W	A,A+,B,D,E,F,G
1200	600	550	66-81	80-100	16	5.85	13.26	Coloured	304	576	450W	A,A+,B,D,E,F,G	Chrome	187	371	300W	A,A+,B,D,E,F,G
1800	400	350	66-81	80-100	24	6.68	14.19	Coloured	325	621	450W	A,A+,B,D,E,F,G	Chrome	212	400	300W	A,A+,B,D,E,F,G
1800	500	450	66-81	80-100	24	7.73	16.93	Coloured	391	748	600W	A,A+,B,D,E,F,G	Chrome	250	472	450W	A,A+,B,D,E,F,G
1800	600	550	66-81	80-100	24	8.78	19.67	Coloured	455	871	600W	A,A+,B,D,E,F,G	Chrome	289	540	600W	A,A+,B,D,E,F,G

Watts to BTU conversion multiple is 3.41

STAVERTON - DESIGNER RANGE

Staverton

Height H (mm)	Width W (mm)	Tappings C (mm)	Tappings from wall - A (mm)	Distance from wall - D (mm)	Tube Qty	Water Content L	Weight KG	Colour	▲T30 Watts	▲T50 Watts	Element Output	Element Type	Colour	▲T30 Watts	▲T50 Watts	Element Output	Element Type
1200	500	450	66-81	80-100	16	5.15	11.43	PVD Finish	226	433	300W	A,A+,B,D,E,F,G	-	-	-	-	-
1200	600	550	66-81	80-100	16	5.85	13.26	PVD Finish	281	539	300W	A,A+,B,D,E,F,G	-	-	-	-	-

PVD Finish is Brushed Brass.

Watts to BTU conversion multiple is 3.41

SANTERO - DESIGNER RANGE

Santero

Height H (mm)	Width W (mm)	Tappings C (mm)	Distance from wall - D (mm)	Tappings from wall - A (mm)	Tube Qty	Water Content L	Weight KG	Colour	▲T30 Watts	▲T50 Watts	Element Output	Element Type	Colour	▲T30 Watts	▲T50 Watts	Element Output	Element Type
800	500	455	95	80	7	3.9	9.1	Coloured	181	342	150W	A, A+, B, D, E, F, G	Chrome	101	196	150W	A, A+, B, D, E, F, G
800	600	555	95	80	7	4.5	9.5	Coloured	214	405	150W	A, A+, B, D, E, F, G	Chrome	117	228	150W	A, A+, B, D, E, F, G
1200	500	455	95	80	10	5.7	11.7	Coloured	266	504	300W	A, A+, B, D, E, F, G	Chrome	152	295	150W	A, A+, B, D, E, F, G
1200	600	555	95	80	10	6.5	14	Coloured	315	597	300W	A, A+, B, D, E, F, G	Chrome	177	343	150W	A, A+, B, D, E, F, G
1800	500	455	95	80	15	8.6	16.5	Coloured	392	742	450W	A, A+, B, D, E, F, G	Chrome	227	436	300W	A, A+, B, D, E, F, G
1800	600	555	95	80	15	9.8	19.7	Coloured	464	879	600W	A, A+, B, D, E, F, G	Chrome	263	507	450W	A, A+, B, D, E, F, G

Watts to BTU conversion multiple is 3.41

Defford

Staverton

Santero

Technical Tables & Drawings

DEFFORD

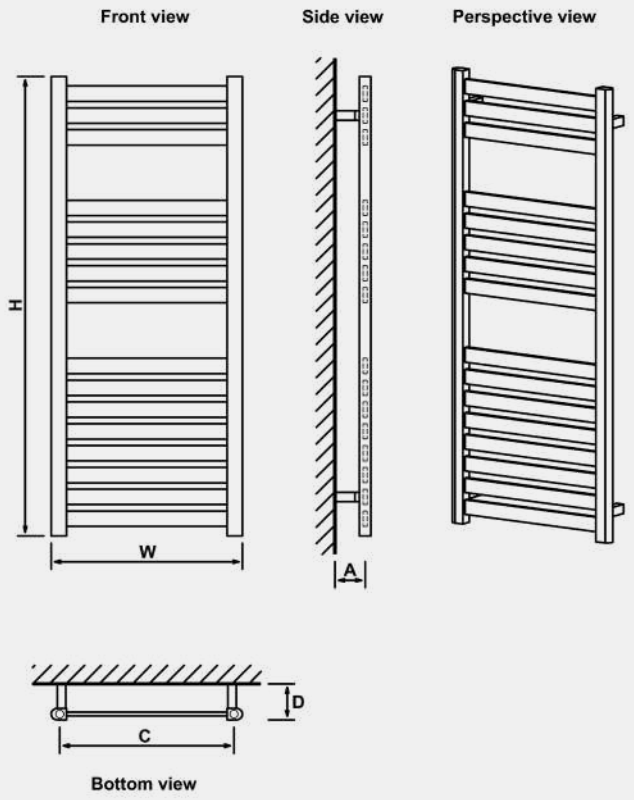

STAVERTON

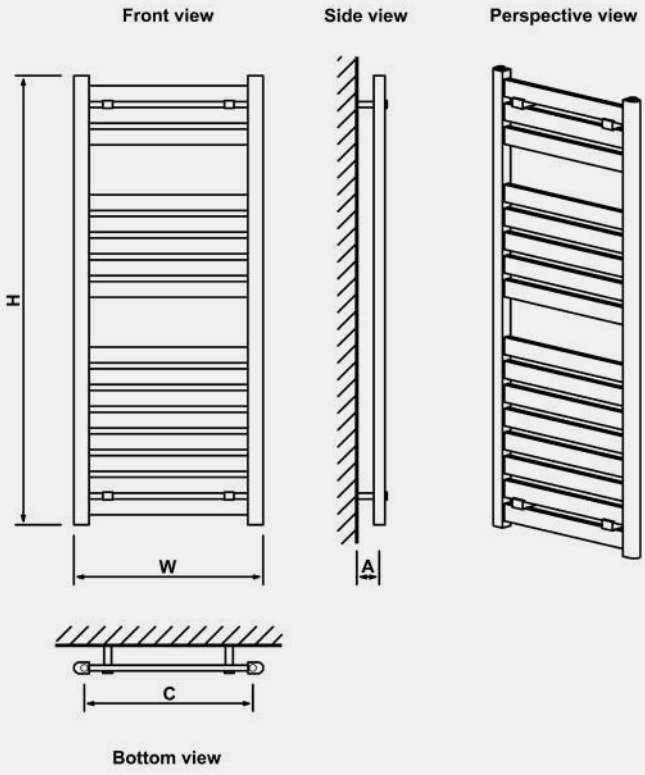

SANTERO

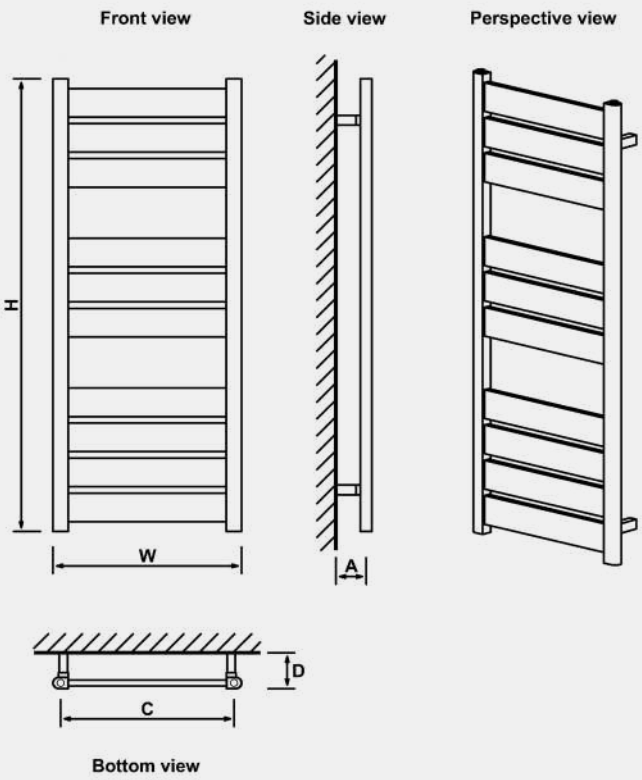

Technical Tables & Drawings

HURLEY - DESIGNER RANGE

Hurley

Height H (mm)	Width W (mm)	Tappings C (mm)	Distance from wall - D (mm)	Tappings from wall - A (mm)	Tube Qty	Water Content L	Weight KG	Colour	▲T30 Watts	▲T50 Watts	Element Output	Element Type	Colour	▲T30 Watts	▲T50 Watts	Element Output	Element Type
800	500	60	104	79	9	2.9	9.7	Coloured	145	289	150W	A, A+, B, D, E, F, G	Chrome	92	186	150W	A, A+, B, D, E, F, G
800	600	60	104	79	9	3.6	11.2	Coloured	163	324	150W	A, A+, B, D, E, F, G	Chrome	103	208	150W	A, A+, B, D, E, F, G
1000	500	60	104	79	12	3.01	11.5	Coloured	185	366	150W	A, A+, B, D, E, F, G	Chrome	115	232	100W	A, A+, B, D, E, F, G
1000	600	60	104	79	12	3.32	12.8	Coloured	205	405	150W	A, A+, B, D, E, F, G	Chrome	129	260	100W	A, A+, B, D, E, F, G
1200	500	60	104	79	15	4.3	14.5	Coloured	219	432	300W	A, A+, B, D, E, F, G	Chrome	138	278	150W	A, A+, B, D, E, F, G
1200	600	60	104	79	15	5.7	16	Coloured	245	485	300W	A, A+, B, D, E, F, G	Chrome	155	311	150W	A, A+, B, D, E, F, G
1500	500	60	104	79	18	4.52	16.7	Coloured	272	537	300W	A, A+, B, D, E, F, G	Chrome	172	344	150W	A, A+, B, D, E, F, G
1500	600	60	104	79	18	4.98	18.6	Coloured	306	603	300W	A, A+, B, D, E, F, G	Chrome	192	386	150W	A, A+, B, D, E, F, G
1800	500	60	104	79	21	6.8	18.5	Coloured	325	639	450W	A, A+, B, D, E, F, G	Chrome	204	408	300W	A, A+, B, D, E, F, G
1800	600	60	104	79	21	7.5	20	Coloured	365	718	600W	A, A+, B, D, E, F, G	Chrome	229	457	300W	A, A+, B, D, E, F, G

Watts to BTU conversion multiple is 3.41

HELMSLEY - DESIGNER RANGE

Helmsley

Height H (mm)	Width W (mm)	Tappings C (mm)	Distance from wall - D (mm)	Tappings from wall - A (mm)	Tube Qty	Water Content L	Weight KG	Colour	▲T30 Watts	▲T50 Watts	Element Output	Element Type	Colour	▲T30 Watts	▲T50 Watts	Element Output	Element Type
800	500	50	106	79	9	3.51	10.3	Coloured	183	347	300W	A, A+, B, D, E, F, G	-	-	-	-	-
800	600	50	106	79	9	3.98	14.5	Coloured	212	403	300W	A, A+, B, D, E, F, G	-	-	-	-	-
1150	500	50	106	79	12	4.81	16.9	Coloured	250	480	300W	A, A+, B, D, E, F, G	-	-	-	-	-
1150	600	50	106	79	12	5.43	19.2	Coloured	289	556	450W	A, A+, B, D, E, F, G	-	-	-	-	-
1400	500	50	106	79	15	5.95	20.6	Coloured	300	581	450W	A, A+, B, D, E, F, G	-	-	-	-	-
1400	600	50	106	79	15	6.74	23.3	Coloured	347	673	600W	A, A+, B, D, E, F, G	-	-	-	-	-
1640	500	50	106	79	18	7.09	24.1	Coloured	350	684	600W	A, A+, B, D, E, F, G	-	-	-	-	-
1640	600	50	106	79	18	8.03	28.1	Coloured	405	793	600W	A, A+, B, D, E, F, G	-	-	-	-	-

Watts to BTU conversion multiple is 3.41

PLATANI - DESIGNER RANGE

Platani

Height H (mm)	Width W (mm)	Tappings C (mm)	Distance from wall - D (mm)	Tappings from wall - A (mm)	Tube Qty	Water Content L	Weight KG	Colour	▲T30 Watts	▲T50 Watts	Element Output	Element Type	Colour	▲T30 Watts	▲T50 Watts	Element Output	Element Type
800	500	50	115	80	6	3.1	5.6	Coloured	142	270	150W	A, A+, B, D, E, F, G	Chrome	88	171	100W	A, A+, B, D, E, F, G
800	600	50	115	80	6	3.4	7.9	Coloured	163	309	150W	A, A+, B, D, E, F, G	Chrome	101	195	100W	A, A+, B, D, E, F, G
1150	500	50	115	80	8	4.2	9.4	Coloured	195	371	150W	A, A+, B, D, E, F, G	Chrome	122	236	150W	A, A+, B, D, E, F, G
1150	600	50	115	80	8	4.7	10.6	Coloured	223	425	150W	A, A+, B, D, E, F, G	Chrome	139	270	150W	A, A+, B, D, E, F, G
1800	500	50	115	80	12	6.4	14.6	Coloured	291	557	450W	A, A+, B, D, E, F, G	Chrome	184	358	150W	A, A+, B, D, E, F, G
1800	600	50	115	80	12	7.2	15.6	Coloured	334	639	450W	A, A+, B, D, E, F, G	Chrome	210	409	300W	A, A+, B, D, E, F, G

Watts to BTU conversion multiple is 3.41

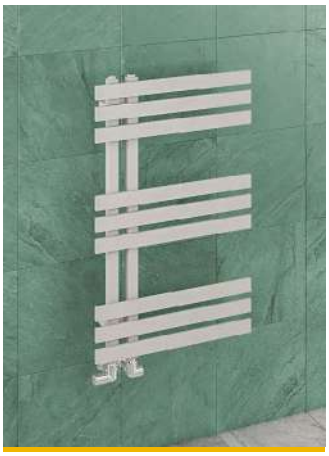

Hurley

Helmsley

Platani

Technical Tables & Drawings

HURLEY

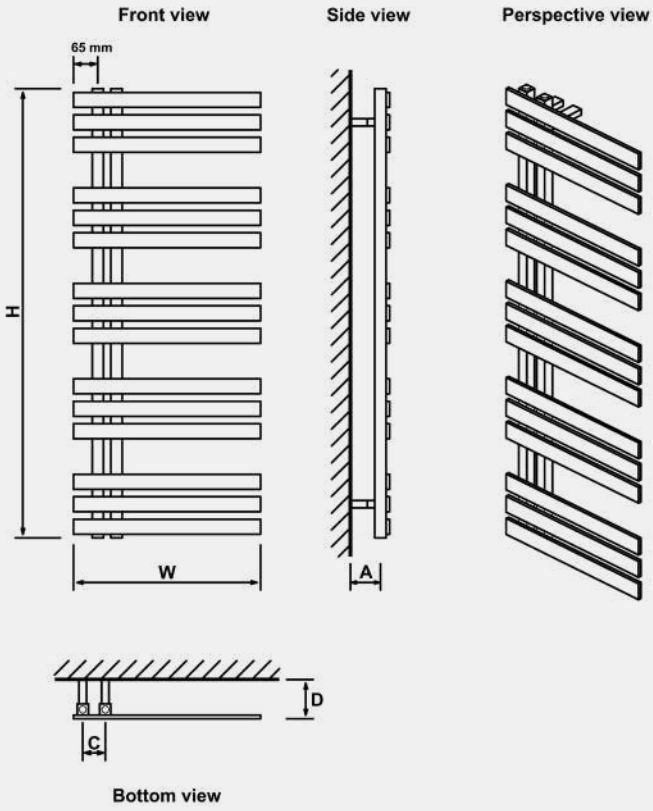

HELMSLEY

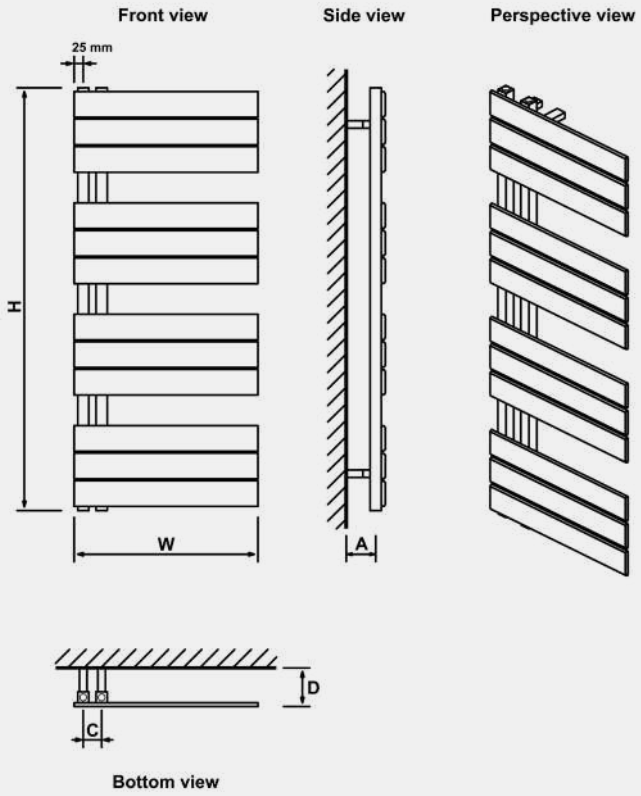

PLATANI

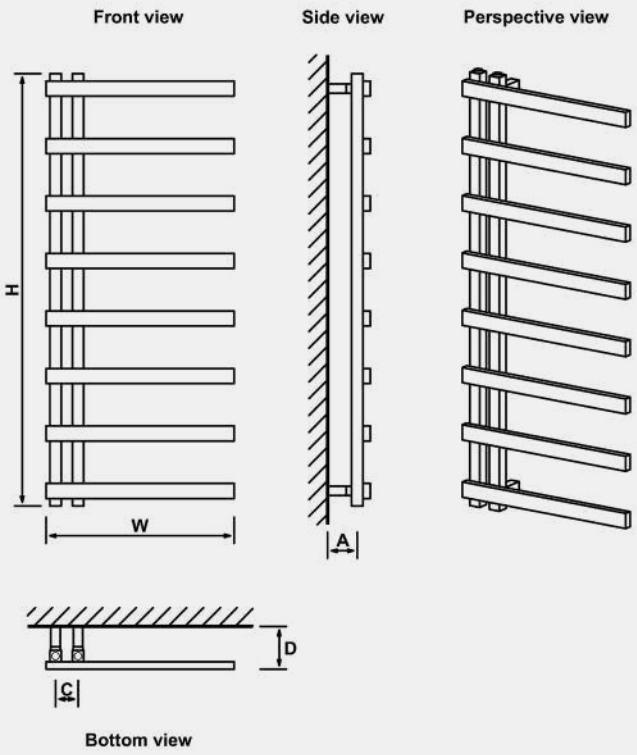

Technical Tables & Drawings

REINBACH - DESIGNER RANGE

Reinbach

Height H (mm)	Width W (mm)	Tappings C (mm)	Distance from wall - D (mm)	Tappings from wall - A (mm)	Tube Qty	Water Content L	Weight KG	Colour	▲T30 Watts	▲T50 Watts	Element Output	Element Type	Colour	▲T30 Watts	▲T50 Watts	Element Output	Element Type
270	500	50	125	80	5	2.2	4.4	Coloured	83	158	100W	A, A+, B	-	-	-	-	-
800	500	50	125	80	12	5.5	10.4	Coloured	194	372	150W	A, A+, B, D, E, F, G	-	-	-	-	-
800	600	50	125	80	12	6.4	11.9	Coloured	228	439	300W	A, A+, B, D, E, F, G	-	-	-	-	-
1200	500	50	125	80	16	7.6	13.6	Coloured	273	530	300W	A, A+, B, D, E, F, G	-	-	-	-	-
1200	600	50	125	80	16	8.7	15.6	Coloured	322	625	300W	A, A+, B, D, E, F, G	-	-	-	-	-
1800	500	50	125	80	24	11.4	21.1	Coloured	397	780	450W	A, A+, B, D, E, F, G	-	-	-	-	-
1800	600	50	125	80	24	13.1	23.7	Coloured	468	920	600W	A, A+, B, D, E, F, G	-	-	-	-	-

Watts to BTU conversion multiple is 3.41

MARLOW - DESIGNER RANGE

Marlow

Height H (mm)	Width W (mm)	Tappings C (mm)	Distance from wall - D (mm)	Tappings from wall - A (mm)	Tube Qty	Water Content L	Weight KG	Colour	▲T30 Watts	▲T50 Watts	Element Output	Element Type	Colour	▲T30 Watts	▲T50 Watts	Element Output	Element Type
850	500	418	127	85	6	4.9	8.5	Coloured	168	318	N/A	N/A	Chrome	106	203	N/A	N/A
850	600	518	127	85	6	5.6	10	Coloured	190	360	N/A	N/A	Chrome	121	232	N/A	N/A
1150	500	418	127	85	8	6.6	11	Coloured	225	426	N/A	N/A	Chrome	141	272	N/A	N/A
1150	600	518	127	85	8	7.5	13	Coloured	255	483	N/A	N/A	Chrome	161	311	N/A	N/A
1750	500	418	127	85	12	10	16.5	Coloured	338	640	N/A	N/A	Chrome	213	411	N/A	N/A
1750	600	518	127	85	12	11.3	18.5	Coloured	383	726	N/A	N/A	Chrome	243	469	N/A	N/A

Watts to BTU conversion multiple is 3.41

MARLOW E-STYLE - DESIGNER RANGE

Marlow E-Style

Height H (mm)	Width W (mm)	Tappings C (mm)	Distance from wall - D (mm)	Tappings from wall - A (mm)	Tube Qty	Water Content L	Weight KG	Colour	▲T30 Watts	▲T50 Watts	Element Output	Element Type	Colour	▲T30 Watts	▲T50 Watts	Element Output	Element Type
850	500	50	127	85	6	4.9	8.5	Coloured	154	294	N/A	N/A	Chrome	98	191	N/A	N/A
850	600	50	127	85	6	5.6	10	Coloured	176	335	N/A	N/A	Chrome	211	216	N/A	N/A
1150	500	50	127	85	8	6.6	11	Coloured	206	394	N/A	N/A	Chrome	131	256	N/A	N/A
1150	600	50	127	85	8	7.5	13	Coloured	234	449	N/A	N/A	Chrome	149	290	N/A	N/A
1750	500	50	127	85	12	10	16.5	Coloured	310	598	N/A	N/A	Chrome	198	386	N/A	N/A
1750	600	50	127	85	12	11.3	18.5	Coloured	354	681	N/A	N/A	Chrome	224	437	N/A	N/A

Watts to BTU conversion multiple is 3.41

Reinbach

Marlow

Marlow E-Style

Technical Tables & Drawings

REINBACH

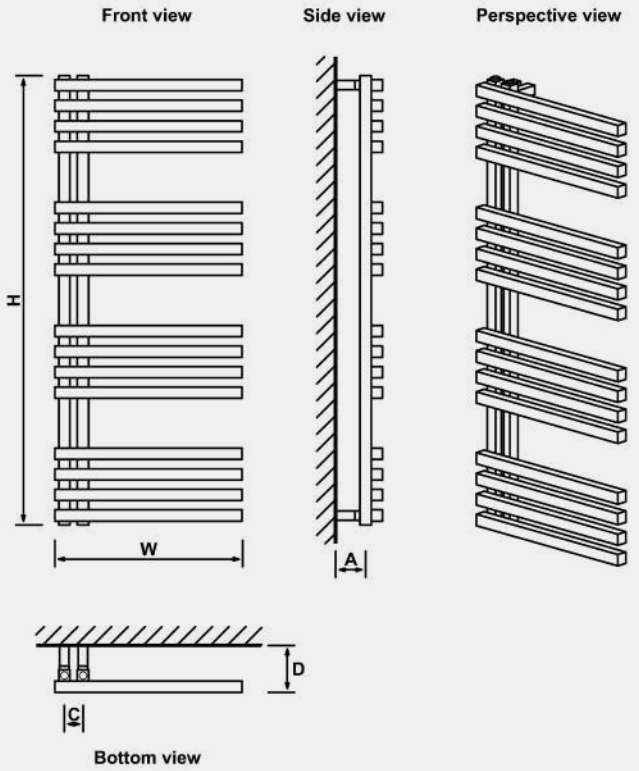

MARLOW

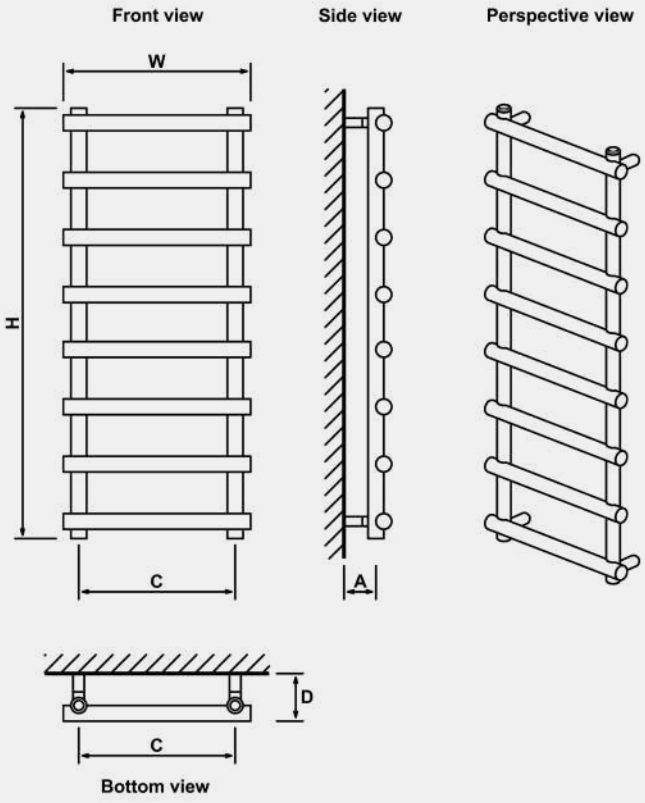

MARLOW E-STYLE

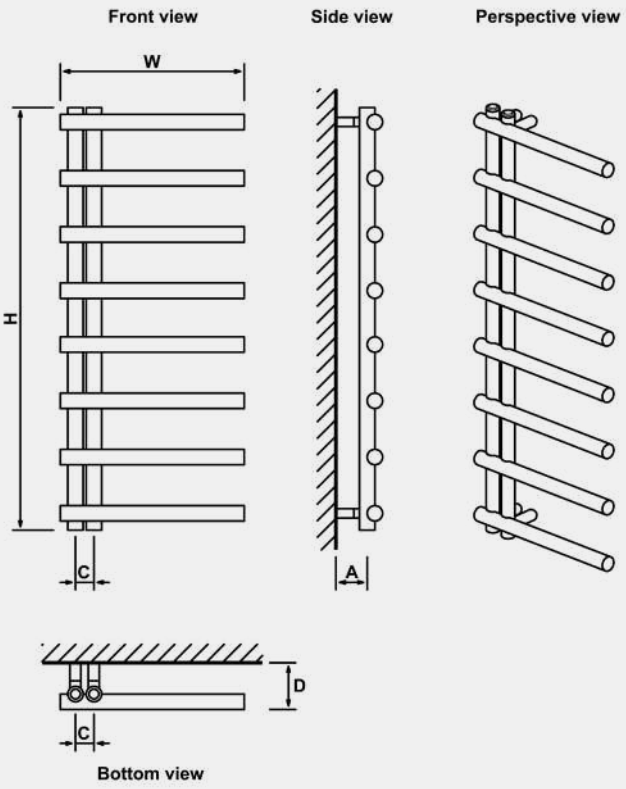

Technical Tables & Drawings

CONWY - DESIGNER RANGE

Conwy

Height H (mm)	Width W (mm)	Tappings C (mm)	Tappings from wall - A (mm)	Distance from wall - D (mm)	Tube Qty	Water Content L	Weight KG	Colour	▲T30 Watts	▲T50 Watts	Element Output	Element Type	Colour	▲T30 Watts	▲T50 Watts	Element Output	Element Type
1200	220	180	84-94	64-74	3	3.8	7.3	Coloured	128	270	100W	A,A+,B,D,E,F,G	Chrome	75	144	100W	A,A+,B,D,E,F,G

Watts to BTU conversion multiple is 3.41

PORTCHESTER - DESIGNER RANGE

Portchester

Height H (mm)	Width W (mm)	Tappings C (mm)	Tappings from wall - A (mm)	Distance from wall - D (mm)	Tube Qty	Water Content L	Weight KG	Colour	▲T30 Watts	▲T50 Watts	Element Output	Element Type	Colour	▲T30 Watts	▲T50 Watts	Element Output	Element Type
1200	225	180	89-99	67-77	3	3.70	6.7	Coloured	121	227	100W	A,A+,B,D,E,F,G	Chrome	79	156	100W	A,A+,B,D,E,F,G

Watts to BTU conversion multiple is 3.41

MURANO VERTICAL - DESIGNER RANGE

Murano - Vertical

Height H (mm)	Width W (mm)	Tappings C (mm)	Distance from wall - D (mm)	Tappings from wall - A (mm)	Tube Qty	Water Content L	Weight KG	Colour	▲T30 Watts	▲T50 Watts	Element Output	Element Type	Colour	▲T30 Watts	▲T50 Watts	Element Output	Element Type
1800	310	310	86	50	12	6.9	13.8	Coloured	388	749	N/A	N/A	-	-	-	-	-
1800	410	410	86	50	16	9.2	18.4	Coloured	533	1029	N/A	N/A	-	-	-	-	-
1800	510	510	86	50	20	11.5	23.4	Coloured	683	1319	N/A	N/A	-	-	-	-	-

Watts to BTU conversion multiple is 3.41

MURANO HORIZONTAL - DESIGNER RANGE

Murano - Horizontal

Height H (mm)	Width W (mm)	Tappings C (mm)	Distance from wall - D (mm)	Tappings from wall - A (mm)	Tube Qty	Water Content L	Weight KG	Colour	▲T30 Watts	▲T50 Watts	Element Output	Element Type	Colour	▲T30 Watts	▲T50 Watts	Element Output	Element Type
600	800	755	117	81	20	5.6	10.8	Coloured	377	695	300W	A, A+, B, D, F, G	-	-	-	-	-
600	1000	955	117	81	20	6.8	13.5	Coloured	482	887	450W	A, A+, B, D, F, G	-	-	-	-	-
600	1200	1155	117	81	20	8	15.9	Coloured	589	1084	450W	A, A+, B, D, F, G	-	-	-	-	-
600	1400	1355	117	81	20	9.2	18.1	Coloured	697	1283	600W	A+, B, D, F, G	-	-	-	-	-

Watts to BTU conversion multiple is 3.41

Conwy

Portchester

Murano Vertical

Murano Horizontal

Technical Tables & Drawings

CONWY

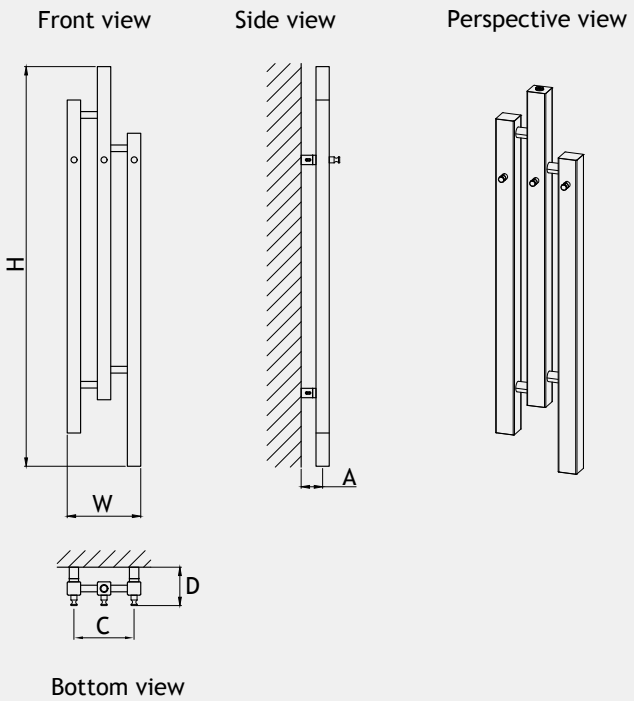

PORTCHESTER

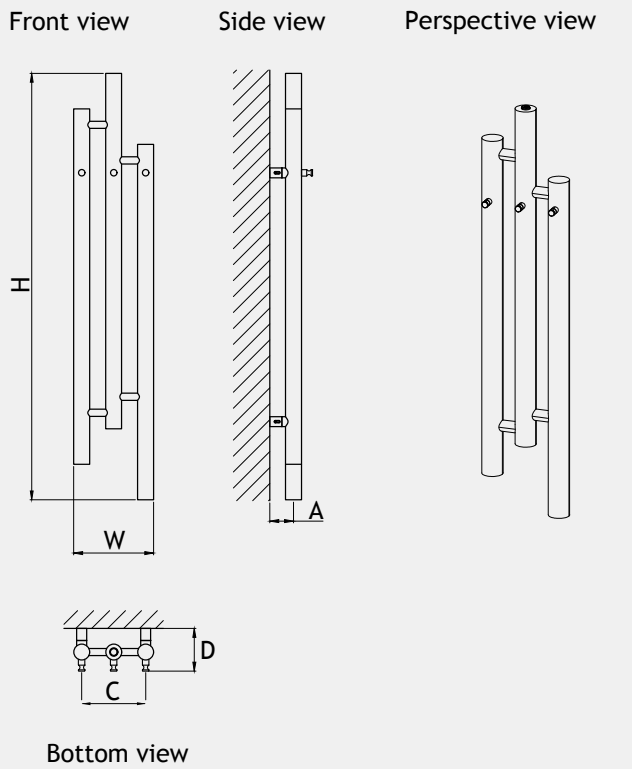

MURANO - VERTICAL

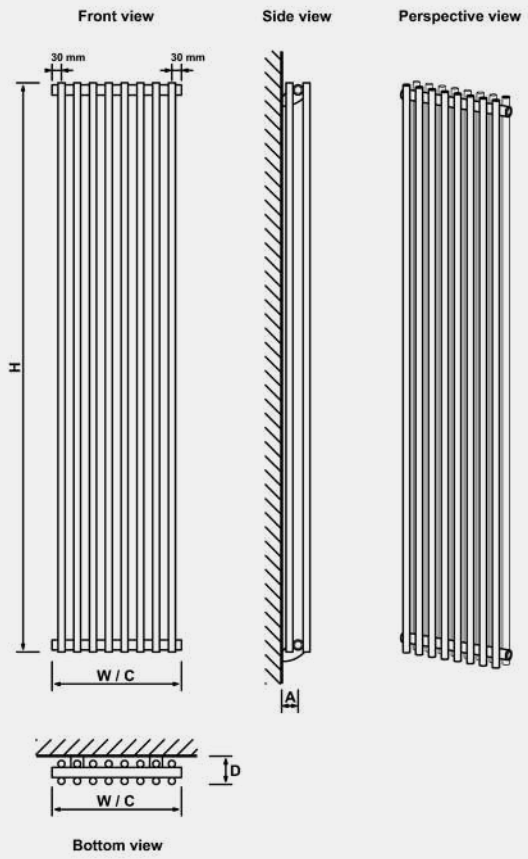

MURANO - HORIZONTAL

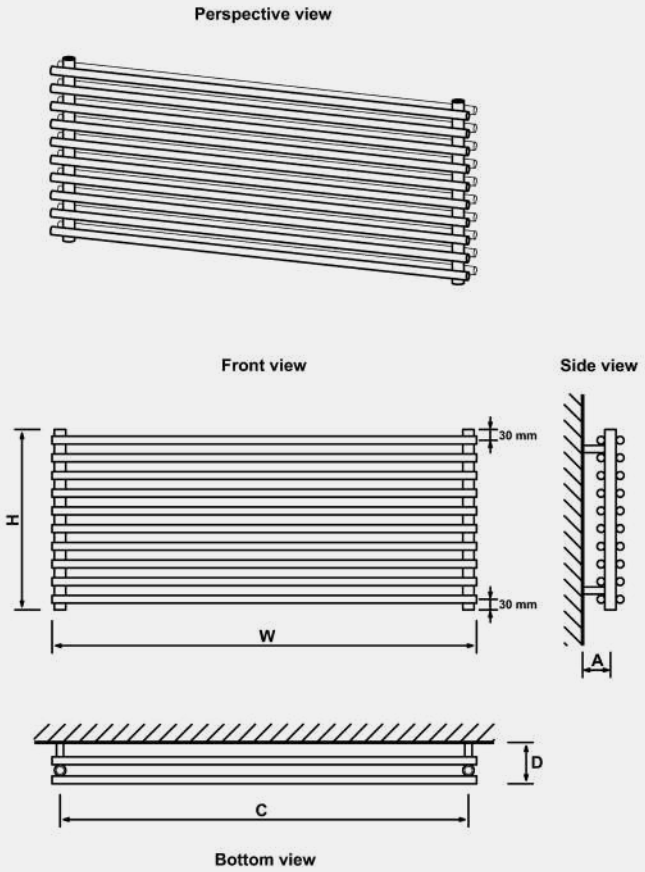

Technical Tables & Drawings

RYTON - DESIGNER RANGE

Ryton

Height H (mm)	Width W (mm)	Tappings C (mm)	Distance from wall - D (mm)	Tappings from wall - A (mm)	Tube Qty	Water Content L	Weight KG	Colour	▲T30 Watts	▲T50 Watts	Element Output	Element Type	Colour	▲T30 Watts	▲T50 Watts	Element Output	Element Type
800	500	470	95-110	75-90	6	3.3	4.84	Coloured	158	299	150W	A, A+, B, D, E, F, G	Chrome	101	191	100W	A, A+, B, D, E, F, G
800	600	570	95-110	75-90	6	3.7	5.7	Coloured	182	344	150W	A, A+, B, D, E, F, G	Chrome	115	218	100W	A, A+, B, D, E, F, G
1200	500	470	95-110	75-90	9	4.5	6.7	Coloured	223	423	150W	A, A+, B, D, E, F, G	Chrome	140	269	150W	A, A+, B, D, E, F, G
1200	600	570	95-110	75-90	9	5	7.8	Coloured	256	487	150W	A, A+, B, D, E, F, G	Chrome	159	306	150W	A, A+, B, D, E, F, G
1600	500	470	95-110	75-90	12	5.75	8.6	Coloured	286	546	300W	A, A+, B, D, E, F, G	Chrome	180	351	150W	A, A+, B, D, E, F, G
1600	600	570	95-110	75-90	12	6.3	9.9	Coloured	330	629	300W	A, A+, B, D, E, F, G	Chrome	205	399	150W	A, A+, B, D, E, F, G

Watts to BTU conversion multiple is 3.41

KENILWORTH - DESIGNER RANGE

Kenilworth

Height H (mm)	Width W (mm)	Tappings C (mm)	Distance from wall - D (mm)	Tappings from wall - A (mm)	Tube Qty	Water Content L	Weight KG	Colour	▲T30 Watts	▲T50 Watts	Element Output	Element Type	Colour	▲T30 Watts	▲T50 Watts	Element Output	Element Type
800	500	468	92-107	76-91	6	2.5	4.06	Coloured	139	262	150W	A, A+, B, D, E, F, G	Chrome	89	170	100W	A, A+, B, D, E, F, G
800	600	568	92-107	76-91	6	2.8	5.3	Coloured	159	300	150W	A, A+, B, D, E, F, G	Chrome	101	194	100W	A, A+, B, D, E, F, G
1200	500	468	92-107	75-91	9	3.4	5.6	Coloured	198	376	150W	A, A+, B, D, E, F, G	Chrome	129	247	150W	A, A+, B, D, E, F, G
1200	600	568	92-107	76-91	9	3.85	6.8	Coloured	227	430	150W	A, A+, B, D, E, F, G	Chrome	147	281	150W	A, A+, B, D, E, F, G
1600	500	468	92-107	76-91	12	4.4	7.05	Coloured	256	484	300W	A, A+, B, D, E, F, G	Chrome	168	322	150W	A, A+, B, D, E, F, G
1600	600	568	92-107	76-91	12	4.9	8.45	Coloured	293	554	300W	A, A+, B, D, E, F, G	Chrome	191	367	150W	A, A+, B, D, E, F, G

Watts to BTU conversion multiple is 3.41

LOXLEY - DESIGNER RANGE

Loxley

Height H (mm)	Width W (mm)	Tappings C (mm)	Distance from wall - D (mm)	Tappings from wall - A (mm)	Tube Qty	Water Content L	Weight KG	Colour	▲T30 Watts	▲T50 Watts	Element Output	Element Type	Colour	▲T30 Watts	▲T50 Watts	Element Output	Element Type
800	500	441	93	76	6	2.1	3.5	Coloured	126	238	100W	A, A+, B, D, F, G	Chrome	85	161	N/A	N/A
800	600	541	93	76	6	2.28	5.25	Coloured	142	268	100W	A, A+, B, D, F, G	Chrome	96	183	N/A	N/A
1200	500	441	93	76	9	3.06	6	Coloured	186	355	150W	A, A+, B, D, E, F, G	Chrome	119	229	100W	A, A+, B, D, F, G
1200	600	541	93	76	9	3.33	7.3	Coloured	209	399	150W	A, A+, B, D, E, F, G	Chrome	135	260	100W	A, A+, B, D, F, G

Watts to BTU conversion multiple is 3.41

ESHTON - DESIGNER RANGE

Eshton

Height H (mm)	Width W (mm)	Tappings C (mm)	Distance from wall - D (mm)	Tappings from wall - A (mm)	Tube Qty	Water Content L	Weight KG	Colour	▲T30 Watts	▲T50 Watts	Element Output	Element Type	Colour	▲T30 Watts	▲T50 Watts	Element Output	Element Type
800	500	441	93	77	6	2.55	4	Coloured	117	221	150W	A, A+, B, D, E, F, G	Chrome	77	145	100W	A, A+, B, D, F, G
800	600	541	93	77	6	3.11	4.17	Coloured	132	250	150W	A, A+, B, D, E, F, G	Chrome	90	170	100W	A, A+, B, D, F, G
1200	500	441	93	77	9	3.45	5.4	Coloured	176	333	150W	A, A+, B, D, E, F, G	Chrome	114	219	150W	A, A+, B, D, E, F, G
1200	600	541	93	77	9	3.72	5.8	Coloured	198	376	150W	A, A+, B, D, E, F, G	Chrome	134	257	150W	A, A+, B, D, E, F, G

Watts to BTU conversion multiple is 3.41

Ryton

Kenilworth

Loxley

Eshton

Technical Tables & Drawings

RYTON

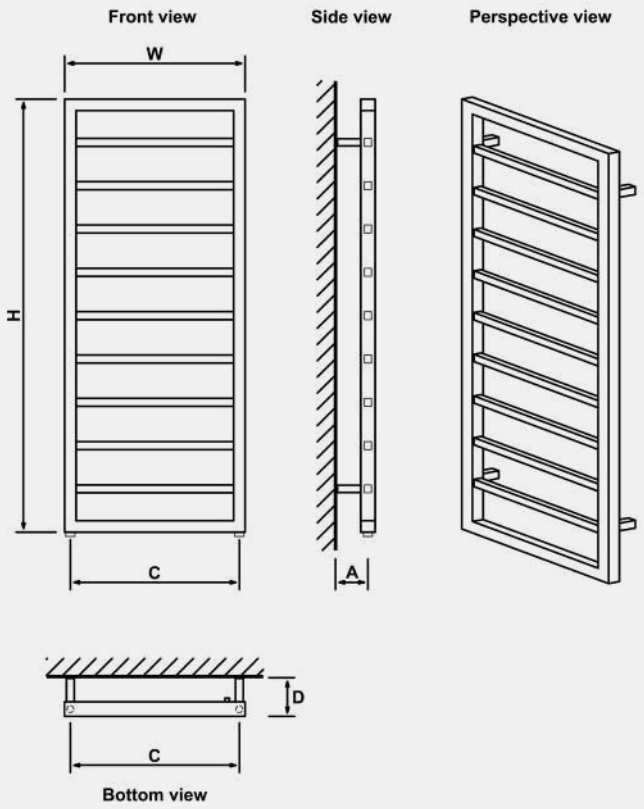

KENILWORTH

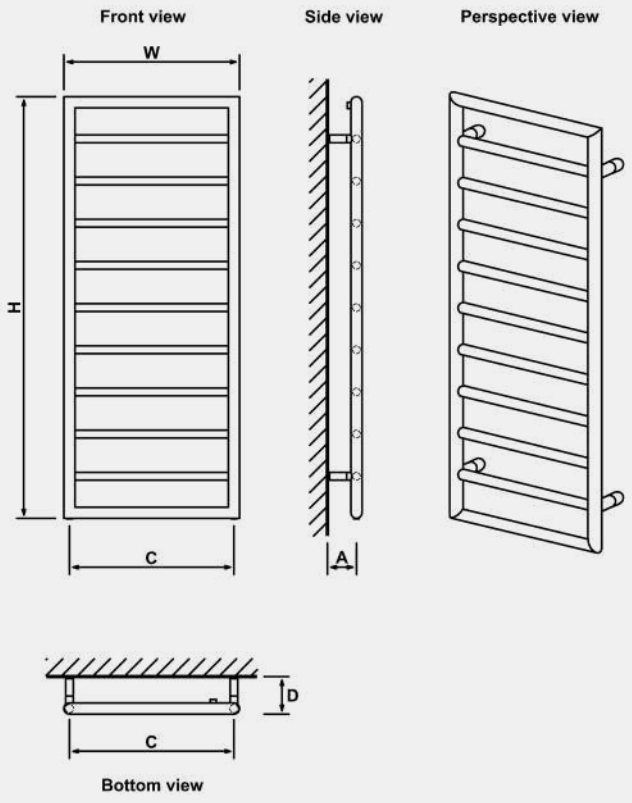

LOXLEY

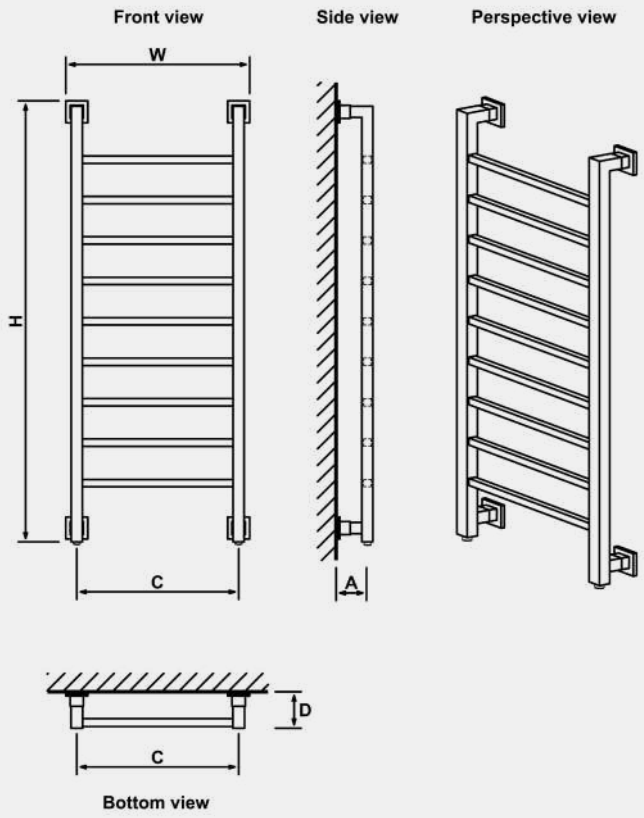

ESHTON

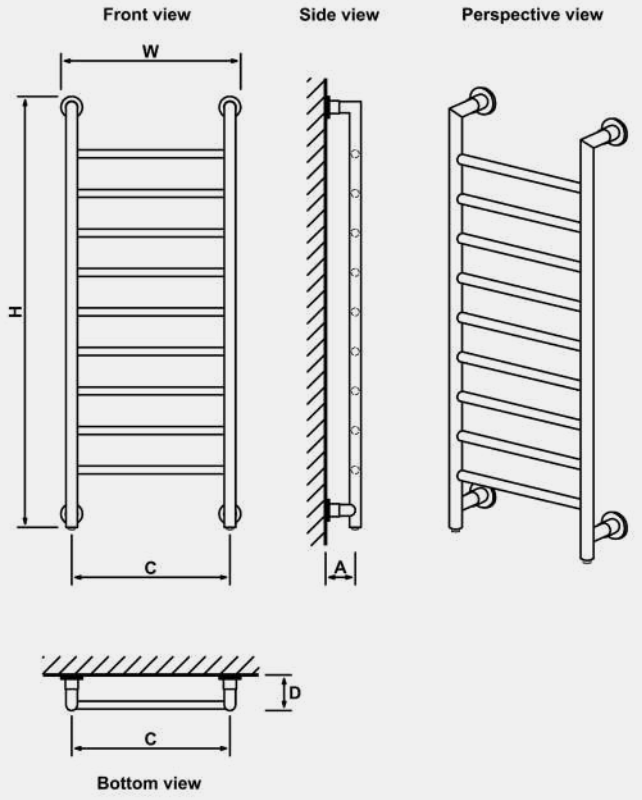

Technical Tables & Drawings

RUBANO - VERTICAL - DESIGNER RANGE

Rubano - Vertical

Height H (mm)	Width W (mm)	Tappings C (mm)	Distance from wall - D (mm)	Tappings from wall - A (mm)	Tube Qty	Water Content L	Weight KG	Colour	▲T30 Watts	▲T50 Watts	Element Output	Element Type
1800	383	383	114	74	6	18.1	35.7	Coloured	580	1122	300W	A, A+, C*, H*
1800	503	503	114	74	8	24.1	47.2	Coloured	773	1496	600W	A+, C**, H**

* Element Type C and H 300W can be used ** Element Type C and H 900w can be used

Watts to BTU conversion multiple is 3.41

RUBANO - HORIZONTAL - DESIGNER RANGE

Rubano - Horizontal

Height H (mm)	Width W (mm)	Tappings C (mm)	Distance from wall - D (mm)	Tappings from wall - A (mm)	Tube Qty	Water Content L	Weight KG	Colour	▲T30 Watts	▲T50 Watts	Element Output	Element Type
600	383	383	114	74	6	7.1	11.2	Coloured	199	386	300W	A, A+, C*, H*
600	623	623	114	74	10	11.7	18.1	Coloured	331	643	450W	A, A+, C, E**, H
600	803	803	114	74	13	15.2	23.5	Coloured	430	836	600W	A, A+, C, E, H
600	1103	1103	114	74	18	21.1	33.3	Coloured	596	1157	900W	A, A+, C, H

* Element Type C and H only 300W can be used ** Element Type E only 300E can be used

Watts to BTU conversion multiple is 3.41

ROWSHAM - DESIGNER RANGE

Rowsham - Horizontal

Height H (mm)	Width W (mm)	Tappings C (mm)	Distance from wall - D (mm)	Tappings from wall - A (mm)	Tube Qty	Water Content L	Weight KG	Colour	▲T30 Watts	▲T50 Watts	Element Output	Element Type	Colour	▲T30 Watts	▲T50 Watts	Element Output	Element Type
600	580	580	110	54	15	7.03	12	Coloured	265	505	N/A	N/A	-	-	-	-	-
600	780	780	110	54	20	9.39	15	Coloured	369	702	N/A	N/A	-	-	-	-	-
600	980	980	110	54	25	11.74	19	Coloured	475	905	N/A	N/A	-	-	-	-	-
600	1180	1180	110	54	30	14.09	23	Coloured	584	1113	N/A	N/A	-	-	-	-	-

Watts to BTU conversion multiple is 3.41

ROWSHAM - DESIGNER RANGE

Rowsham - Vertical

Height H (mm)	Width W (mm)	Tappings C (mm)	Distance from wall - D (mm)	Tappings from wall - A (mm)	Tube Qty	Water Content L	Weight KG	Colour	▲T30 Watts	▲T50 Watts	Element Output	Element Type	Colour	▲T30 Watts	▲T50 Watts	Element Output	Element Type
1800	300	300	110	54	8	10.3	16	Coloured	419	822	N/A	N/A	-	-	-	-	-
1800	380	380	110	54	10	12.89	19	Coloured	545	1069	N/A	N/A	-	-	-	-	-
1800	500	500	110	54	13	16.76	25	Coloured	739	1451	N/A	N/A	-	-	-	-	-

Watts to BTU conversion multiple is 3.41

Rubano Vertical

Rubano Horizontal

Rowsham Horizontal

Rowsham Vertical

Technical Tables & Drawings

RUBANO - VERTICAL

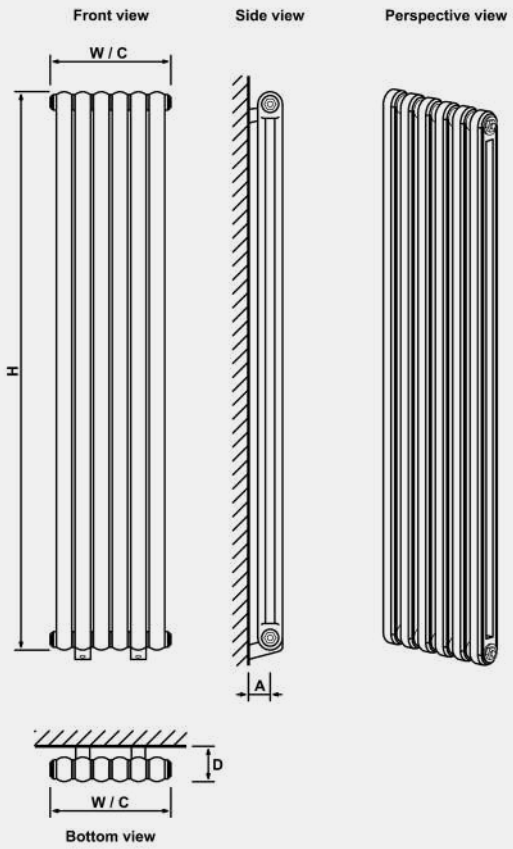

RUBANO - HORIZONTAL

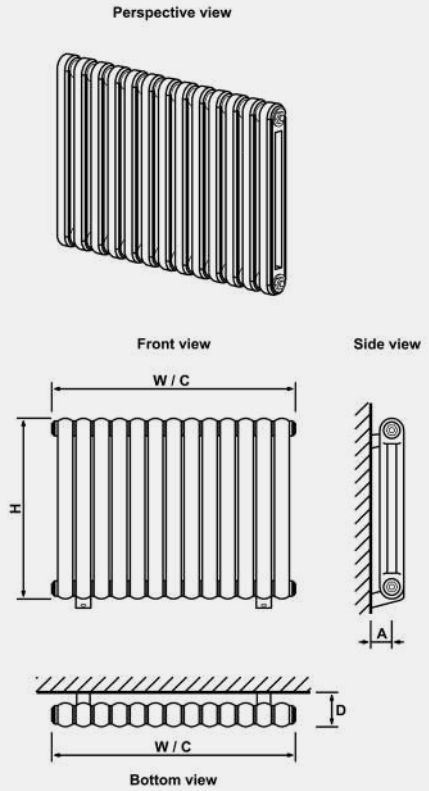

ROWSHAM - HORIZONTAL

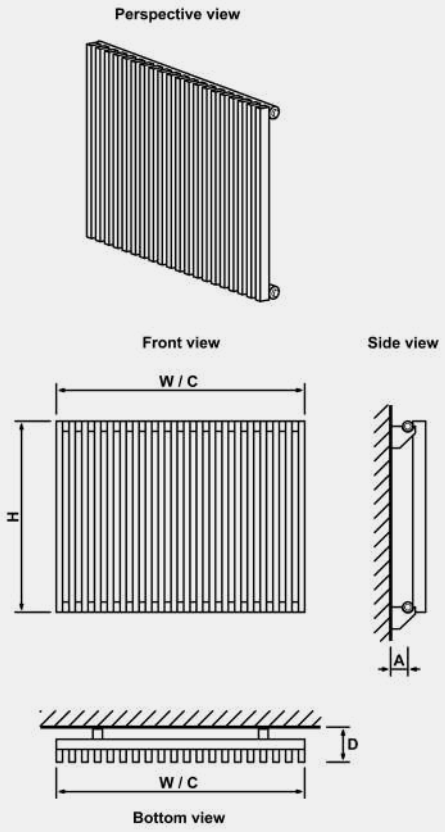

ROWSHAM - VERTICAL

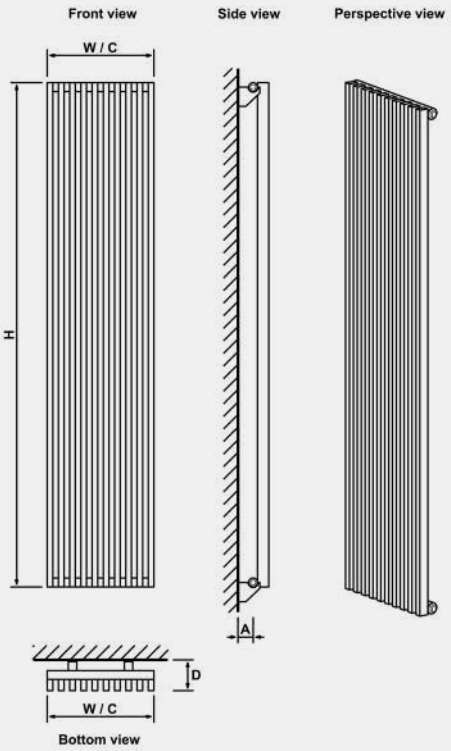

Technical Tables & Drawings

ROWSHAM TOWEL RAIL - DESIGNER RANGE

Rowsham Towel Rail

Height H (mm)	Width W (mm)	Tappings C (mm)	Distance from wall - D (mm)	Tappings from wall - A (mm)	Tube Qty	Water Content L	Weight KG	Colour	▲T30 Watts	▲T50 Watts	Element Output	Element Type	Colour	▲T30 Watts	▲T50 Watts	Element Output	Element Type
800	500	468	139	83	13	5.5	8.5	Coloured	250	465	300W	A, A+, B, D, E, F, G	-	-	-	-	-
800	600	568	139	83	13	6.4	9.6	Coloured	270	502	300W	A, A+, B, D, E, F, G	-	-	-	-	-
1200	500	468	139	83	22	9.1	14	Coloured	371	695	450W	A, A+, B, D, E, F, G	-	-	-	-	-
1200	600	568	139	83	22	10.6	15.5	Coloured	401	750	600W	A, A+, B, D, E, F, G	-	-	-	-	-
1800	500	468	139	83	30	12.6	19.4	Coloured	562	1061	600W	A, A+, B, D, E, F, G	-	-	-	-	-
1800	600	568	139	83	30	14.7	21.6	Coloured	606	1145	750W	A, A+, B, D, E, F, G	-	-	-	-	-

Watts to BTU conversion multiple is 3.41

WINGRAVE FLAT PANEL - FLAT PANEL RANGE

Wingrave Flat Panel

Height H (mm)	Width W (mm)	Tappings C1/C2 (mm)	Distance from wall - D (mm)	Tappings from wall - A (mm)	Tube Qty	Water Content L	Weight KG	Colour	▲T30 Watts*	▲T50 Watts*	Element Output	Element Type
1200	310	255/50	96	73	26	4.8	9.7	Coloured	196	374	150W	A, A+, B, D, E, F, G
1200	410	355/50	96	73	26	5.6	11.5	Coloured	247	471	300W	A, A+, B, D, E, F, G
1200	510	455/50	96	73	26	6.5	13.4	Coloured	298	569	300W	A, A+, B, D, E, F, G
1200	610	555/50	96	73	26	7.3	15.4	Coloured	350	667	450W	A, A+, B, D, E, F, G
1800	310	255/50	96	73	38	7	14.1	Coloured	289	551	300W	A, A+, B, D, E, F, G
1800	410	355/50	96	73	38	8.3	16.9	Coloured	364	694	450W	A, A+, B, D, E, F, G
1800	510	455/50	96	73	38	9.5	19.8	Coloured	439	837	450W	A, A+, B, D, E, F, G
1800	610	555/50	96	73	38	10.8	22.7	Coloured	514	980	600W	A, A+, B, D, E, F, G

* Further heat output information available on eastbrooktrade.com **E&OA**

Watts to BTU conversion multiple is 3.41

TUNSTALL - DESIGNER RANGE

Tunstall - Vertical

Height H (mm)	Width W (mm)	Tappings C (mm)	Distance from wall - D (mm)	Tappings from wall - A (mm)	Tube Qty	Water Content L	Weight KG	Colour	▲T30 Watts	▲T50 Watts	Element Output	Element Type	Colour	▲T30 Watts	▲T50 Watts	Element Output	Element Type
1800	280	280	93	52	4	6.08	10.7	Coloured	235	459	N/A	N/A	Chrome	133	254	N/A	N/A
1800	350	350	93	52	5	8.07	12.72	Coloured	303	592	N/A	N/A	Chrome	177	337	N/A	N/A
1800	420	420	93	52	6	9.14	15.4	Coloured	373	729	N/A	N/A	Chrome	222	424	N/A	N/A
1800	490	490	93	52	7	11.29	17.3	Coloured	445	870	N/A	N/A	Chrome	270	515	N/A	N/A
1800	560	560	93	52	8	12.91	19.5	Coloured	518	1013	N/A	N/A	Chrome	320	609	N/A	N/A
1800	630	630	93	52	9	13.73	22.5	Coloured	593	1159	N/A	N/A	Chrome	371	707	N/A	N/A

Watts to BTU conversion multiple is 3.41

Rowsham Towel Rail

Wingrave Flat Panel

Tunstall Vertical

Technical Tables & Drawings

ROWSHAM TOWEL RAIL

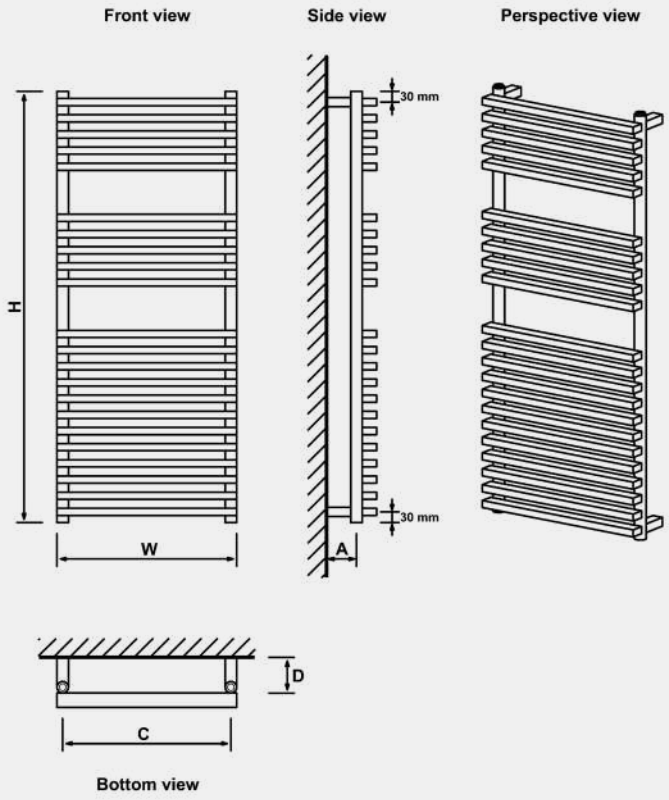

WINGRAVE FLAT PANEL

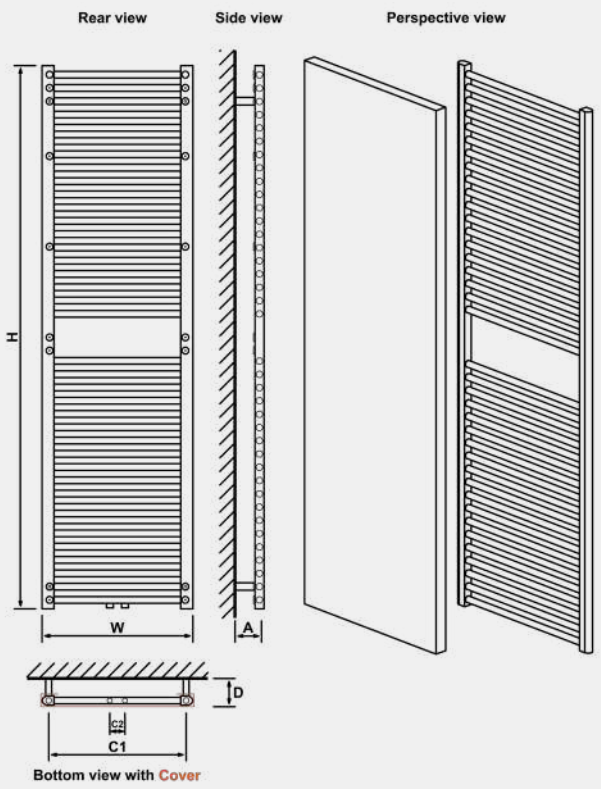

TUNSTALL - VERTICAL

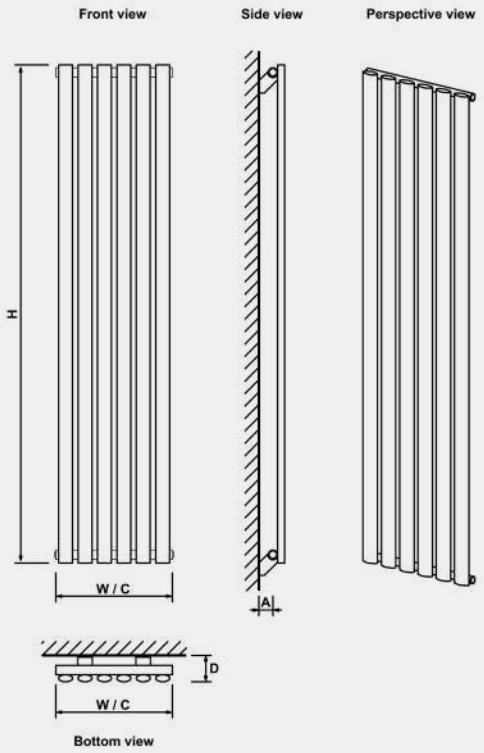

Technical Tables & Drawings

TUNSTALL - DESIGNER RANGE

Tunstall - Horizontal

Height H (mm)	Width W (mm)	Tappings C (mm)	Distance from wall - D (mm)	Tappings from wall - A (mm)	Tube Qty	Water Content L	Weight KG	Colour	▲T30 Watts	▲T50 Watts	Element Output	Element Type	Colour	▲T30 Watts	▲T50 Watts	Element Output	Element Type
600	471	471	93	52	8	4.68	8.1	Coloured	161	311	N/A	N/A	-	-	-	-	-
600	589	589	93	52	10	5.37	10.3	Coloured	207	402	N/A	N/A	-	-	-	-	-
600	648	648	93	52	11	6.43	10.8	Coloured	231	448	N/A	N/A	-	-	-	-	-
600	825	825	93	52	14	7.53	13.8	Coloured	304	590	N/A	N/A	-	-	-	-	-
600	1002	1002	93	52	17	9.15	16.5	Coloured	380	737	N/A	N/A	-	-	-	-	-
600	1061	1061	93	52	18	10.53	16.93	Coloured	406	787	N/A	N/A	-	-	-	-	-
600	1179	1179	93	52	20	10.77	19.2	Coloured	458	887	N/A	N/A	-	-	-	-	-

Watts to BTU conversion multiple is 3.41

Tunstall Towel Rail

Height H (mm)	Width W (mm)	Tappings C (mm)	Distance from wall - D (mm)	Tappings from wall - A (mm)	Tube Qty	Water Content L	Weight KG	Colour	▲T30 Watts	▲T50 Watts	Element Output	Element Type	Colour	▲T30 Watts	▲T50 Watts	Element Output	Element Type
560	1000	954	124	83	8	4.72	12.3	Coloured	292	550	300W	A, A+, B, D, E, F, G	Chrome	175	340	150W	A, A+, B, D, E, F, G
800	500	454	124	83	9	4.45	8.9	Coloured	192	362	150W	A, A+, B, D, E, F, G	Chrome	115	224	150W	A, A+, B, D, E, F, G
800	600	554	124	83	9	5.18	10.1	Coloured	222	418	300W	A, A+, B, D, E, F, G	Chrome	132	257	150W	A, A+, B, D, E, F, G
1200	500	454	124	83	13	6.51	12.6	Coloured	279	528	300W	A, A+, B, D, E, F, G	Chrome	175	340	150W	A, A+, B, D, E, F, G
1200	600	554	124	83	13	7.56	14.3	Coloured	322	610	450W	A, A+, B, D, E, F, G	Chrome	200	389	300W	A, A+, B, D, E, F, G
1600	500	454	124	83	17	8.56	16.4	Coloured	367	699	450W	A, A+, B, D, E, F, G	Chrome	234	456	300W	A, A+, B, D, E, F, G
1600	600	554	124	83	17	9.94	18.6	Coloured	423	807	600W	A, A+, B, D, E, F, G	Chrome	268	522	300W	A, A+, B, D, E, F, G

Watts to BTU conversion multiple is 3.41

TUNSTALL - DESIGNER RANGE

Tunstall Double - Vertical

Height H (mm)	Width W (mm)	Tappings C (mm)	Distance from wall - D (mm)	Tappings from wall - A (mm)	Tube Qty	Water Content L	Weight KG	Colour	▲T30 Watts	▲T50 Watts	Element Output	Element Type	Colour	▲T30 Watts	▲T50 Watts	Element Output	Element Type
1800	280	280	104	65	8	16.9	25.9	Coloured	378	743	N/A	N/A	-	-	-	-	-
1800	350	350	104	65	10	14.5	30.1	Coloured	472	929	N/A	N/A	-	-	-	-	-
1800	420	420	104	65	12	25.3	35.8	Coloured	567	1114	N/A	N/A	-	-	-	-	-
1800	490	490	104	65	14	20.2	41.1	Coloured	661	1300	N/A	N/A	-	-	-	-	-
1800	560	560	104	65	16	23.1	47.1	Coloured	756	1486	N/A	N/A	-	-	-	-	-
1800	630	630	104	65	18	38	51	Coloured	850	1671	N/A	N/A	-	-	-	-	-

Watts to BTU conversion multiple is 3.41

Tunstall Double - Horizontal

Height H (mm)	Width W (mm)	Tappings C (mm)	Distance from wall - D (mm)	Tappings from wall - A (mm)	Tube Qty	Water Content L	Weight KG	Colour	▲T30 Watts	▲T50 Watts	Element Output	Element Type	Colour	▲T30 Watts	▲T50 Watts	Element Output	Element Type
600	471	471	104	65	16	8.1	17.2	Coloured	282	550	N/A	N/A					
600	589	589	104	65	20	14.6	21.8	Coloured	353	687	N/A	N/A	-	-	-	-	-
600	648	648	104	65	22	11.1	23.7	Coloured	388	756	N/A	N/A					
600	825	825	104	65	28	20.5	29.5	Coloured	494	962	N/A	N/A	-	-	-	-	-
600	1002	1002	104	65	34	24.8	36.6	Coloured	600	1168	N/A	N/A	-	-	-	-	-
600	1061	1061	104	65	36	18.3	38.6	Coloured	635	1237	N/A	N/A					
600	1179	1179	104	65	40	29.2	43.6	Coloured	705	1375	N/A	N/A	-	-	-	-	-

Watts to BTU conversion multiple is 3.41

Tunstall Horizontal

Tunstall Towel Rail

Tunstall Double Vertical

Tunstall Double Horizontal

Technical Tables & Drawings

TUNSTALL - HORIZONTAL

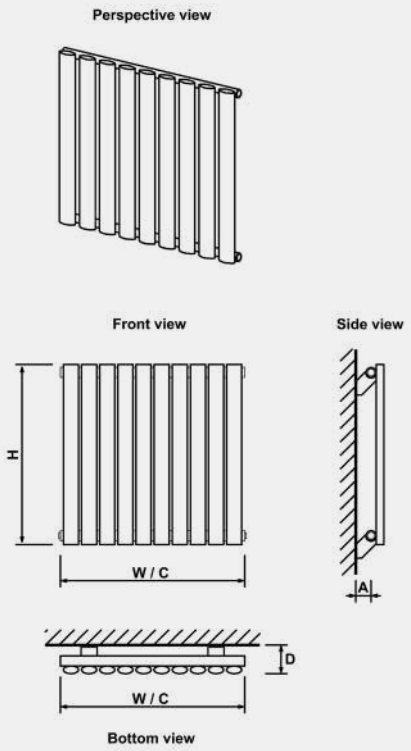

TUNSTALL TOWEL RAIL

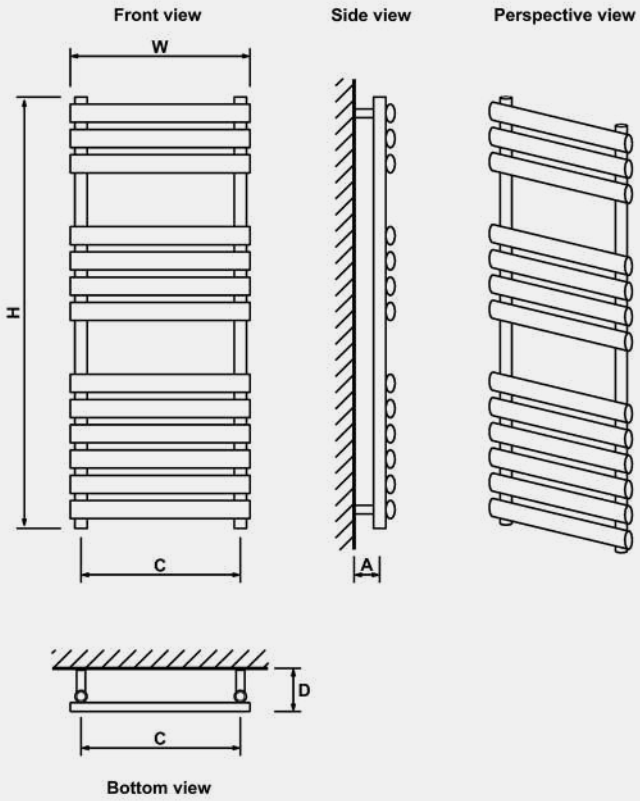

TUNSTALL DOUBLE -VERTICAL

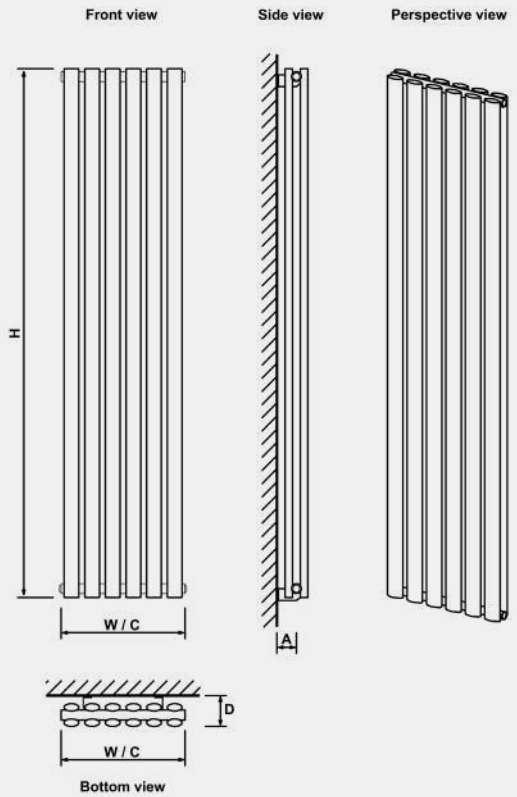

TUNSTALL DOUBLE - HORIZONTAL

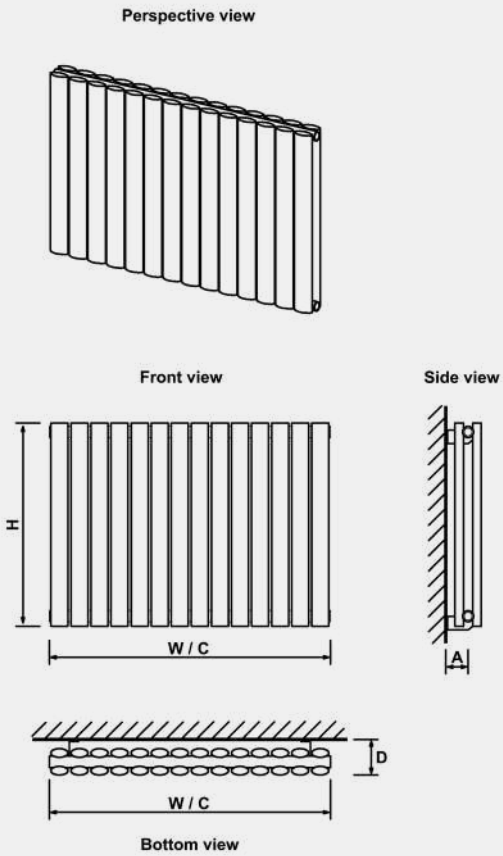

Technical Tables & Drawings

TUNSTALL - DESIGNER RANGE

Tunstall Double Towel Rail

Height H (mm)	Width W (mm)	Tappings C (mm)	Distance from wall - D (mm)	Tappings from wall - A (mm)	Tube Qty	Water Content L	Weight KG	Colour	▲T30 Watts	▲T50 Watts	Element Output	Element Type	Colour	▲T30 Watts	▲T50 Watts	Element Output	Element Type
560	1000	954	109-114	70-75	16	19.1	27.9	Coloured	438	824	600W	A, A+, B, D, E, F, G	-	-	-	-	-
800	500	454	109-114	70-75	18	11.5	20.8	Coloured	283	534	300W	A, A+, B, D, E, F, G	-	-	-	-	-
800	600	554	109-114	70-75	18	13.5	21.8	Coloured	331	635	450W	A, A+, B, D, E, F, G	-	-	-	-	-
1200	500	454	109-114	70-75	26	16.7	29.1	Coloured	396	771	450W	A, A+, B, D, E, F, G	-	-	-	-	-
1200	600	554	109-114	70-75	26	19.6	30.2	Coloured	463	901	600W	A, A+, B, D, E, F, G	-	-	-	-	-
1600	500	454	109-114	70-75	34	21.9	36.9	Coloured	539	1032	600W	A, A+, B, D, E, F, G	-	-	-	-	-
1600	600	554	109-114	70-75	34	25.8	37.9	Coloured	622	1192	750W	A, A+, B, D, E, F, G	-	-	-	-	-

Watts to BTU conversion multiple is 3.41

Tunstall Mirror

Height H (mm)	Width W (mm)	Tappings C (mm)	Distance from wall - D (mm)	Tappings from wall - A (mm)	Tube Qty	Water Content L	Weight KG	Colour	▲T30 Watts	▲T50 Watts	Element Output	Element Type	Colour	▲T30 Watts	▲T50 Watts	Element Output	Element Type
1800	380	380	79	40	4	8.6	23.7	Coloured	275	532	N/A	N/A	-	-	-	-	-
1800	500	500	79	40	6	12.9	28.3	Coloured	401	780	N/A	N/A	-	-	-	-	-

Watts to BTU conversion multiple is 3.41

Tunstall Double Mirror

Height H (mm)	Width W (mm)	Tappings C (mm)	Distance from wall - D (mm)	Tappings from wall - A (mm)	Tube Qty	Water Content L	Weight KG	Colour	▲T30 Watts	▲T50 Watts	Element Output	Element Type	Colour	▲T30 Watts	▲T50 Watts	Element Output	Element Type
1800	380	380	104	65	8	16.9	33.7	Coloured	454	868	N/A	N/A	-	-	-	-	-
1800	500	500	104	65	12	25.3	44.1	Coloured	627	1225	N/A	N/A	-	-	-	-	-

Watts to BTU conversion multiple is 3.41

DEDDINGTON - DESIGNER RANGE

Deddington - Vertical

Height H (mm)	Width W (mm)	Tappings C (mm)	Distance from wall - D (mm)	Tappings from wall - A (mm)	Tube Qty	Water Content L	Weight KG	Colour	▲T30 Watts	▲T50 Watts	Element Output	Element Type	Colour	▲T30 Watts	▲T50 Watts	Element Output	Element Type
1800	310	310	100	60	4	4.2	15.3	Coloured	320	636	N/A	N/A	Chrome	194	386	N/A	N/A
1800	390	390	100	60	5	5.2	17.8	Coloured	403	800	N/A	N/A	Chrome	241	479	N/A	N/A
1800	470	470	100	60	6	6.3	22.4	Coloured	485	963	N/A	N/A	Chrome	287	571	N/A	N/A
1800	550	550	100	60	7	7.3	24.9	Coloured	567	1127	N/A	N/A	Chrome	333	662	N/A	N/A
1800	630	630	100	60	8	8.4	29.6	Coloured	650	1291	N/A	N/A	Chrome	378	752	N/A	N/A

Watts to BTU conversion multiple is 3.41

Tunstall Double Towel Rail

Tunstall Mirror

Tunstall Double Mirror

Deddington Vertical

Technical Tables & Drawings

TUNSTALL DOUBLE TOWEL RAIL

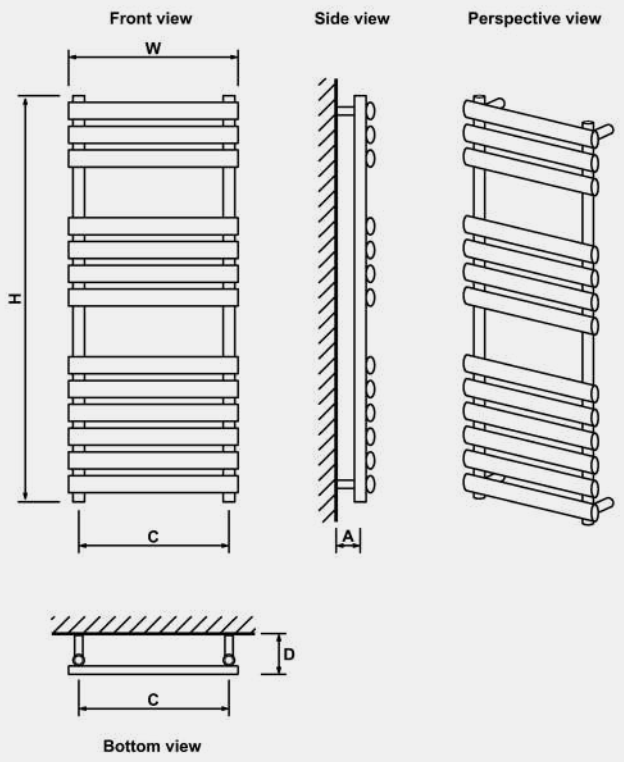

TUNSTALL MIRROR

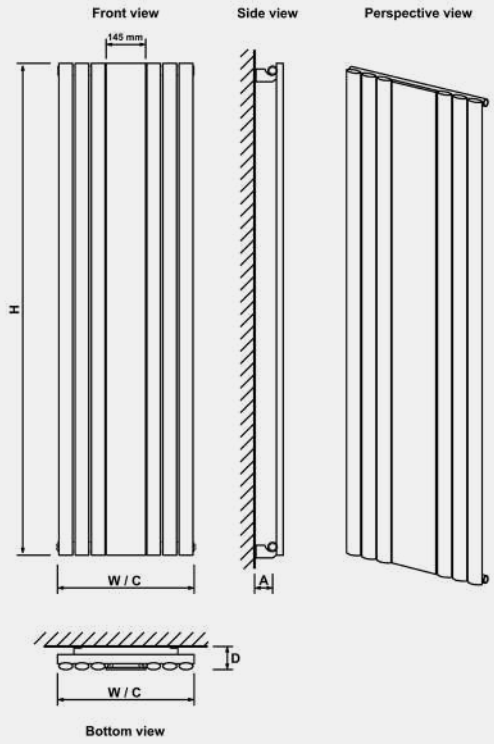

TUNSTALL DOUBLE MIRROR

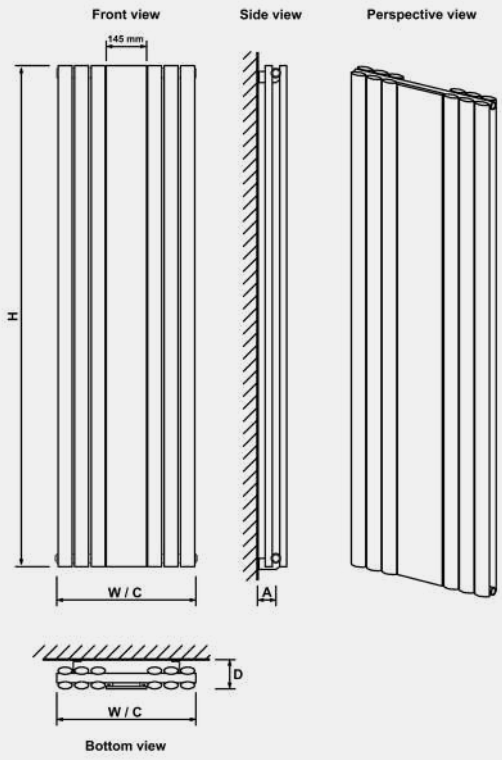

DEDDINGTON - VERTICAL

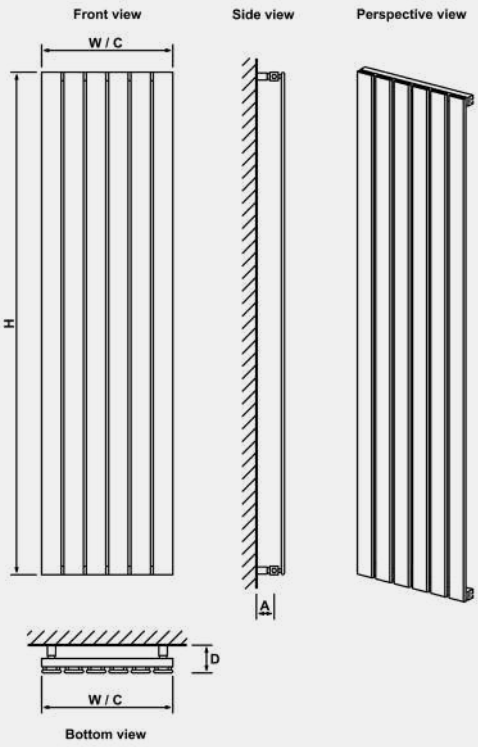

Technical Tables & Drawings

DEDDINGTON - DESIGNER RANGE

Deddington - Horizontal

Height H (mm)	Width W (mm)	Tappings C (mm)	Distance from wall - D (mm)	Tappings from wall - A (mm)	Tube Qty	Water Content L	Weight KG	Colour	▲T30 Watts	▲T50 Watts	Element Output	Element Type	Colour	▲T30 Watts	▲T50 Watts	Element Output	Element Type
600	390	390	100	60	5	2.1	6.7	Coloured	145	291	N/A	N/A	Chrome	102	197	N/A	N/A
600	470	470	100	60	6	2.5	8	Coloured	175	351	N/A	N/A	Chrome	122	234	N/A	N/A
600	550	550	100	60	7	2.9	9.4	Coloured	205	410	N/A	N/A	Chrome	141	272	N/A	N/A
600	630	630	100	60	8	3.4	11.9	Coloured	235	470	N/A	N/A	Chrome	160	309	N/A	N/A
600	790	790	100	60	10	4.3	14.7	Coloured	294	589	N/A	N/A	Chrome	198	382	N/A	N/A
600	950	950	100	60	12	5.1	17.6	Coloured	354	708	N/A	N/A	Chrome	236	454	N/A	N/A
600	1110	1110	100	60	14	6	18.8	Coloured	413	827	N/A	N/A	Chrome	273	526	N/A	N/A
600	1270	1270	100	60	16	6.9	23.5	Coloured	473	946	N/A	N/A	Chrome	310	597	N/A	N/A

Watts to BTU conversion multiple is 3.41

Deddington Towel Rails

Height H (mm)	Width W (mm)	Tappings C (mm)	Distance from wall - D (mm)	Tappings from wall - A (mm)	Tube Qty	Water Content L	Weight KG	Colour	▲T30 Watts	▲T50 Watts	Element Output	Element Type	Colour	▲T30 Watts	▲T50 Watts	Element Output	Element Type
800	500	470	100	60	8	3.3	11	Coloured	215	405	150W	A, A+, B, D, E, F, G	Chrome	132	253	150W	A, A+, B, D, E, F, G
800	600	570	100	60	8	3.7	12.4	Coloured	250	472	300W	A, A+, B, D, E, F, G	Chrome	151	291	150W	A, A+, B, D, E, F, G
1200	500	470	100	60	11	4.6	15.1	Coloured	306	578	300W	A, A+, B, D, E, F, G	Chrome	189	362	300W	A, A+, B, D, E, F, G
1200	600	570	100	60	11	5.2	17.3	Coloured	356	672	300W	A, A+, B, D, E, F, G	Chrome	217	416	300W	A, A+, B, D, E, F, G
1800	500	470	100	60	15	6.5	20.6	Coloured	435	822	450W	A, A+, B, D, E, F, G	Chrome	268	513	300W	A, A+, B, D, E, F, G
1800	600	570	100	60	15	7.3	23.6	Coloured	506	956	450W	A, A+, B, D, E, F, G	Chrome	308	589	450W	A, A+, B, D, E, F, G

Watts to BTU conversion multiple is 3.41

ADDINGTON II - DESIGNER RANGE

Addington II Type 10 - Vertical / Horizontal

Height H (mm)	Width W (mm)	Vertical Installation Tappings C1 (mm)	Horizontal Installation Tappings C2 (mm)	Distance from wall - D (mm)	Tappings from wall - A (mm)	Tube Qty	Water Content L	Weight KG	Colour	▲T30 Watts	▲T50 Watts	Element Output	Element Type	Colour	▲T30 Watts	▲T50 Watts	Element Output	Element Type
500	522	522	450	66	40	7	2.83	7.75	Coloured	142	261	150W	A,A+,C,E,H	Chrome	78	157	100W	A
500	596	596	450	66	40	8	3.24	8.86	Coloured	163	298	150W	A,A+,C,E,H	Chrome	90	180	150W	A,A+
600	300	300	550	66	40	4	1.83	5.15	Coloured	94	173	150W	A,A+	Chrome	52	105	N/A	N/A
600	374	374	550	66	40	5	2.29	6.44	Coloured	117	217	150W	A,A+	Chrome	65	131	100W	A
600	448	448	550	66	40	6	2.74	7.72	Coloured	140	260	150W	A,A+,C,E,H	Chrome	78	157	150W	A,A+
600	522	522	550	66	40	7	3.20	9.01	Coloured	164	303	150W	A,A+,C,E,H	Chrome	91	183	150W	A,A+
600	596	596	550	66	40	8	3.65	10.29	Coloured	187	347	300W	A,A+,C,E,H	Chrome	104	210	150W	A,A+
600	670	670	550	66	40	9	4.11	11.58	Coloured	211	390	300W	A,A+,C,E,H	Chrome	117	236	150W	A,A+
600	818	818	550	66	40	11	5.02	14.15	Coloured	257	477	450W	A,A+,C,E,H	Chrome	143	288	150W	A,A+
600	1040	1040	550	66	40	14	6.39	18.01	Coloured	328	607	450W	A,A+,C,E,H	Chrome	182	367	300W	A,A+,C,E,H
600	1188	1188	550	66	40	16	7.30	20.58	Coloured	374	693	600W	A,A+,C,E,H	Chrome	208	419	300W	A,A+,C,E,H
600	1262	1262	550	66	40	17	7.75	21.86	Coloured	398	737	600W	A,A+,C,E,H	Chrome	221	446	300W	A,A+,C,E,H
800	522	522	750	66	40	7	3.93	11.52	Coloured	210	396	300W	A,A+,C,H	Chrome	116	235	150W	A,A+
800	596	596	750	66	40	8	4.49	13.17	Coloured	240	452	300W	A,A+,C,H	Chrome	133	268	150W	A,A+
1000	522	522	950	66	40	7	4.66	14.04	Coloured	262	502	300W	A,A+,C,H	Chrome	141	286	300W	A,A+,C,E,H
1000	596	596	950	66	40	8	5.32	16.04	Coloured	299	574	450W	A,A+,C,H	Chrome	161	327	300W	A,A+,C,E,H
1200	522	522	1150	66	40	7	5.39	16.55	Coloured	320	625	450W	A,A+,C,H	Chrome	166	338	300W	A,A+,C,E,H
1200	596	596	1150	66	40	8	6.16	18.91	Coloured	366	715	450W	A+,C,H	Chrome	190	386	300W	A,A+,C,E,H
1400	522	522	1350	66	40	7	6.12	19.06	Coloured	387	769	450W	A+,C,H	Chrome	191	390	300W	A,A+,C,E,H
1400	596	596	1350	66	40	8	7.00	21.79	Coloured	442	879	450W	A+,C,H	Chrome	219	446	300W	A,A+,C,E,H
1800	300	300	1750	66	40	4	4.34	13.77	Coloured	241	482	N/A	N/A	Chrome	141	314	N/A	N/A
1800	374	374	1750	66	40	5	5.42	17.21	Coloured	301	602	N/A	N/A	Chrome	176	393	N/A	N/A
1800	448	448	1750	66	40	6	6.50	20.65	Coloured	361	723	450W	A, A+	Chrome	212	471	300W	A+
1800	522	522	1750	66	40	7	7.58	24.09	Coloured	421	843	600W	A+	Chrome	247	550	300W	A+
1800	596	596	1750	66	40	8	8.67	27.53	Coloured	481	963	600W	A+	Chrome	282	629	450W	A+
1800	670	670	1750	66	40	9	9.75	30.97	Coloured	541	1084	600W	A+	Chrome	318	707	450W	A+

** In horizontal installation, the above Heights become Widths and above Widths become Heights

Watts to BTU conversion multiple is 3.41

Technical Tables & Drawings

DEDDINGTON - HORIZONTAL

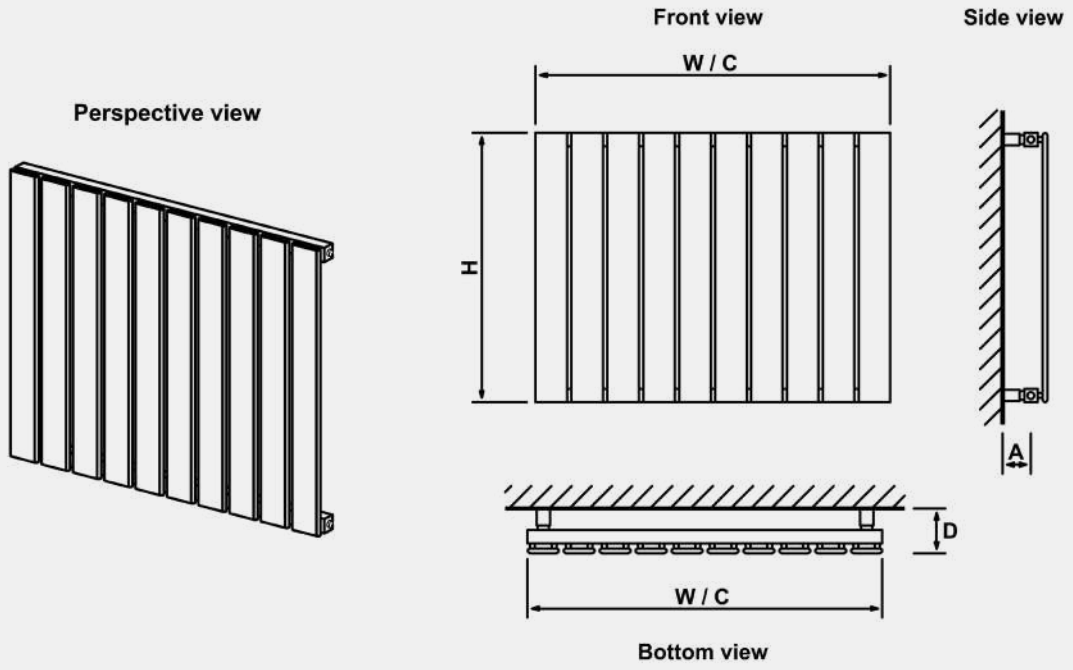

DEDDINGTON TOWEL RAIL

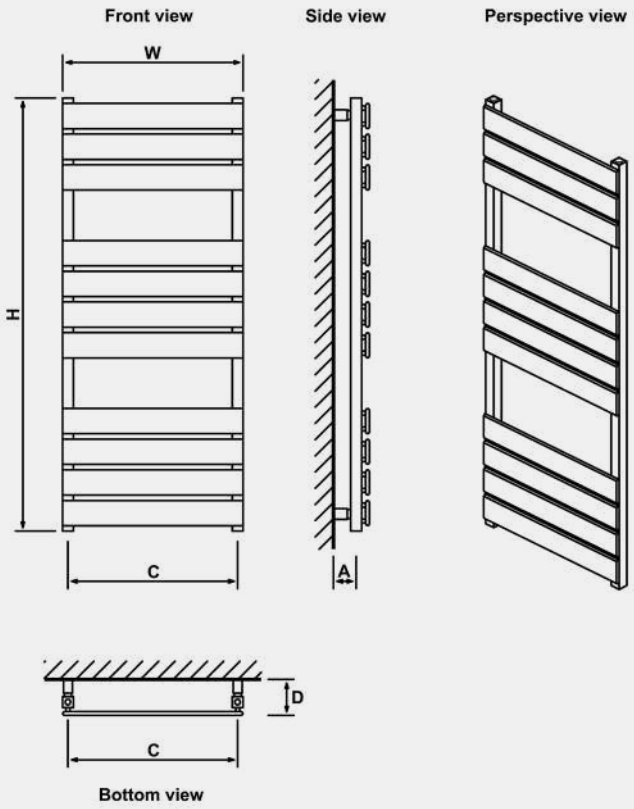

ADDINGTON II TYPE 10 VERTICAL / HORIZONTAL

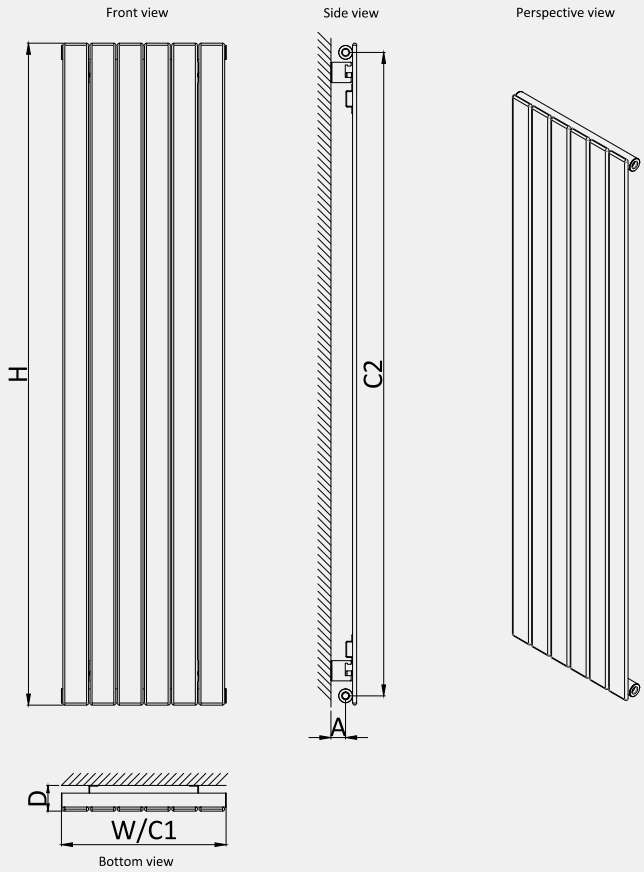

Technical Tables & Drawings

ADDINGTON II - DESIGNER RANGE

Addington II Type 20 - Vertical / Horizontal

Height H (mm)	Width W (mm)	Vertical Installation Tappings C1 (mm)	Horizontal Installation Tappings C2 (mm)	Distance from wall - D (mm)	Tappings from wall - A (mm)	Tube Qty	Water Content L	Weight KG	Colour	▲T30 Watts	▲T50 Watts	Element Output	Element Type
600	300	300	550	89	63	8	3.08	9.46	Coloured	142	262	100W	A
600	374	374	550	89	63	10	3.85	11.82	Coloured	177	328	300W	A,A+
600	448	448	550	89	63	12	4.62	14.19	Coloured	212	394	300W	A,A+,C,E,H
600	522	522	550	89	63	14	5.39	16.55	Coloured	248	459	450W	A,A+,C,E,H
600	596	596	550	89	63	16	6.16	18.91	Coloured	283	525	450W	A,A+,C,E,H
600	670	670	550	89	63	18	6.93	21.28	Coloured	319	590	600W	A,A+,C,E,H
600	818	818	550	89	63	22	8.47	26.00	Coloured	389	722	600W	A,A+,C,E,H
600	1040	1040	550	89	63	28	10.77	33.09	Coloured	496	918	900W	A,A+,C,E,H
600	1188	1188	550	89	63	32	12.31	37.81	Coloured	566	1050	1000W	A,A+,C,E,H
600	1262	1262	550	89	63	34	13.08	40.18	Coloured	602	1115	1000W	A,A+,C,E,H
1800	300	300	1750	89	63	8	8.10	26.70	Coloured	383	747	N/A	N/A
1800	374	374	1750	89	63	10	10.12	33.37	Coloured	479	934	N/A	N/A
1800	448	448	1750	89	63	12	12.14	40.05	Coloured	575	1121	450W	A+
1800	522	522	1750	89	63	14	14.16	46.72	Coloured	671	1308	600W	A+
1800	596	596	1750	89	63	16	16.19	53.39	Coloured	766	1494	600W	A+
1800	670	670	1750	89	63	18	18.21	60.06	Coloured	862	1681	600W	A+

*In horizontal installation, the above Heights become Widths and above Widths become Heights

Watts to BTU conversion multiple is 3.41

Addington II Type 10 Towel Rail

Height H (mm)	Width W (mm)	Tappings C (mm)	Distance from wall - D (mm)	Tappings from wall - A (mm)	Tube Qty	Water Content L	Weight KG	Colour	▲T30 Watts	▲T50 Watts	Element Output	Element Type	Colour	▲T30 Watts	▲T50 Watts	Element Output	Element Type
790	400	350	66	40	8	3.19	7.97	Coloured	169	318	150W	A, A+, B, E	Chrome	97	187	150W	A, A+, B, E
790	500	450	66	40	8	3.61	9.40	Coloured	200	375	300W	A, A+, B, E	Chrome	115	220	150W	A, A+, B, E
790	600	550	66	40	8	4.03	10.84	Coloured	229	430	300W	A, A+, B, E	Chrome	131	252	150W	A, A+, B, E
1110	400	350	66	40	10	4.22	10.30	Coloured	222	418	300W	A, A+, B, E	Chrome	129	249	150W	A, A+, B, E
1110	500	450	66	40	10	4.75	12.10	Coloured	262	494	300W	A, A+, B, E	Chrome	152	293	150W	A, A+, B, E
1110	600	550	66	40	10	5.27	13.89	Coloured	300	567	450W	A, A+, B, E	Chrome	173	335	300W	A, A+, B, E
1750	400	350	66	40	14	6.29	14.97	Coloured	324	617	450W	A, A+, B, E	Chrome	191	370	300W	A, A+, B, E
1750	500	450	66	40	14	7.02	17.49	Coloured	383	729	600W	A, A+, B, E	Chrome	224	436	300W	A, A+, B, E
1750	600	550	66	40	14	7.75	20.00	Coloured	439	836	600W	A, A+, B, E	Chrome	256	498	300W	A, A+, B, E

Watts to BTU conversion multiple is 3.41

Addington II Type 20 Towel Rail

Height H (mm)	Width W (mm)	Tappings C (mm)	Distance from wall - D (mm)	Tappings from wall - A (mm)	Tube Qty	Water Content L	Weight KG	Colour	▲T30 Watts	▲T50 Watts	Element Output	Element Type
1110	500	450	89	63	20	7.36	21.08	Coloured	373	714	600W	A, A+, B, E
1750	500	450	89	63	28	10.68	30.06	Coloured	539	1031	750W	A, A+, B, E

Watts to BTU conversion multiple is 3.41

Addington II Type 20
Vertical / Horizontal

Addington II Type 10
Towel Rail

Addington II Type 20
Towel Rail

Technical Tables & Drawings

ADDINGTON II TYPE 20 VERTICAL / HORIZONTAL

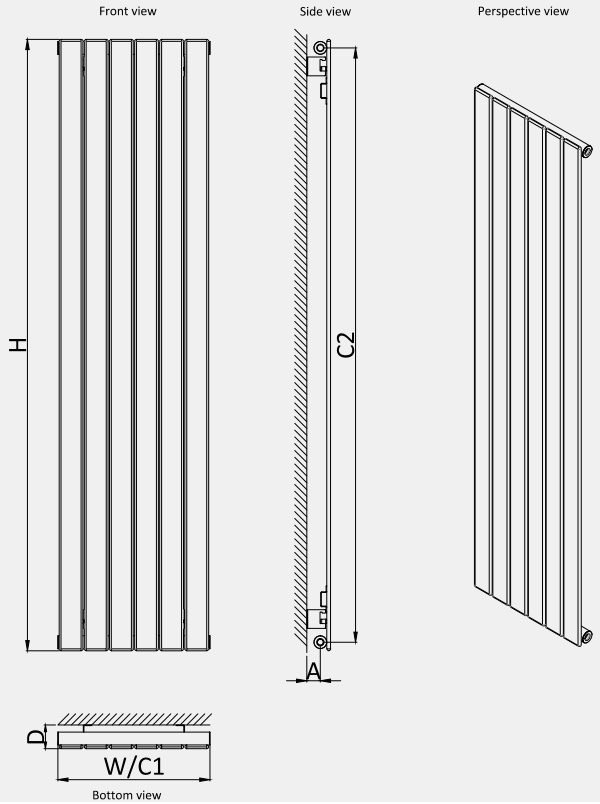

ADDINGTON II TYPE 10 TOWEL RAIL

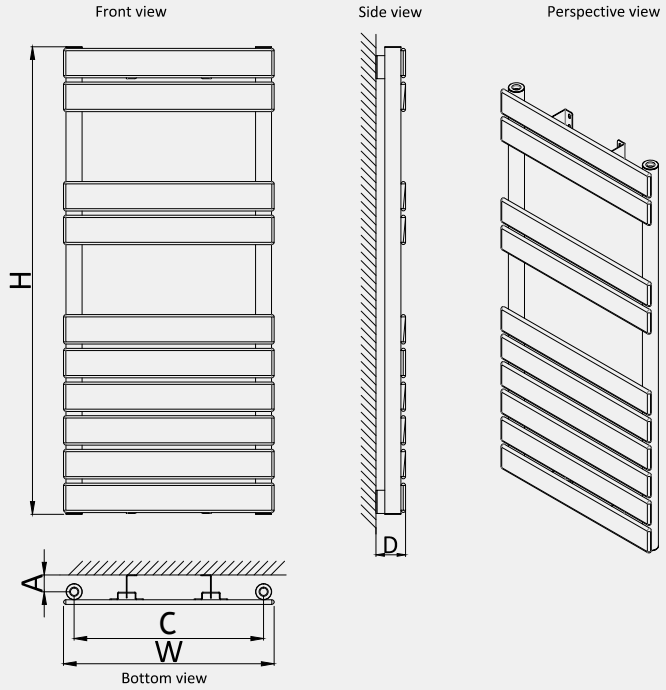

ADDINGTON II TYPE 20 TOWEL RAIL

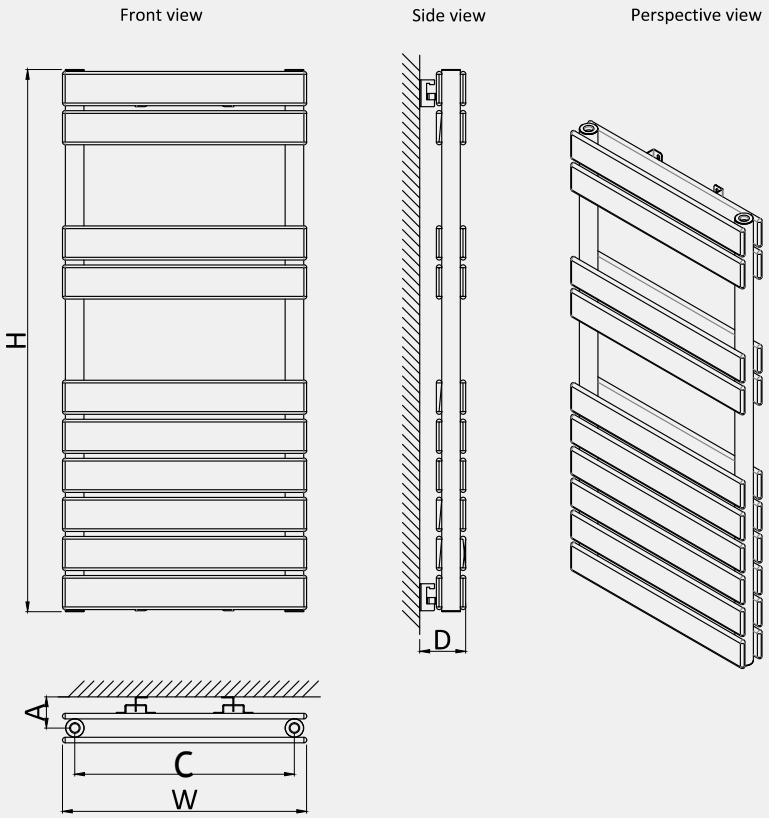

Technical Tables & Drawings

ROSANO - ALUMINIUM RANGE

Rosano - Vertical

Height H (mm)	Width W (mm)	Tappings C1 / C2** (mm)	Distance from wall - D (mm)	Tappings from wall - A (mm)	Tube Qty	Water Content L	Weight KG	Colour	▲T30 Watts	▲T50 Watts	Element Output	Element Type
600	280	280/190	70/90	35/55	3	0.58	4.6	Coloured	124	243	150W	A, A+
1200	280	280/190	70/90	35/55	3	1.00	6.7	Coloured	229	455	300W	A, A+
1200	375	375/285	70/90	35/55	4	1.40	8.5	Coloured	305	606	450W	A, A+
1200	470	470/380	70/90	35/55	5	1.70	13.5	Coloured	381	758	600W	A, A+
1200	565	565/475	70/90	35/55	6	2.00	16.2	Coloured	458	909	600W	A, A+
1200	660	660/570	70/90	35/55	7	2.40	13.9	Coloured	534	1061	750W	A, A+
1800	280	280/190	70/90	35/55	3	1.75	10.0	Coloured	322	643	450W	A, A+
1800	375	375/285	70/90	35/55	4	2.33	13.1	Coloured	429	857	750W	A, A+
1800	470	470/380	70/90	35/55	5	2.91	16.2	Coloured	536	1071	900W	A, A+
1800	565	565/475	70/90	35/55	6	3.52	19.5	Coloured	643	1285	1000W	A, A+
1800	660	660/570	70/90	35/55	7	4.05	22.3	Coloured	811*	1611*	1200W	A, A+

** Tappings C1 : Side connection, Tappings C2 : Bottom connection.

* Further heat output information available on eastbrooktrade.com **E&OA**

Watts to BTU conversion multiple is 3.41

Rosano - Horizontal

Height H (mm)	Width W (mm)	Tappings C (mm)	Distance from wall - D (mm)	Tappings from wall - A (mm)	Tube Qty	Water Content L	Weight KG	Colour	▲T30 Watts	▲T50 Watts	Element Output	Element Type
600	470	470	70/90	35/55	5	0.96	6.7	Coloured	207	405	300W	A, A+, C, H
600	660	660	70/90	35/55	7	1.34	9.1	Coloured	289	568	450W	A, A+, C, H
600	850	850	70/90	35/55	9	1.73	11.5	Coloured	372	730	600W	A, A+, C, H
600	1040	1040	70/90	35/55	11	2.11	13.9	Coloured	455	892	750W	A, A+, C, H
600	1230	1230	70/90	35/55	13	2.50	16.3	Coloured	537	1054	900W	A, A+, C, H
600	1420	1420	70/90	35/55	15	2.80	14.9	Coloured	582*	1156*	900W	A, A+, C, H
600	1610	1610	70/90	35/55	17	3.20	16.9	Coloured	660*	1310*	1000W	A, A+, C, H

Watts to BTU conversion multiple is 3.41

* Further heat output information available on eastbrooktrade.com **E&OA**

PERETTI - ALUMINIUM RANGE

Peretti - Vertical

Height H (mm)	Width W (mm)	Tappings C1 / C2** (mm)	Distance from wall - D (mm)	Tappings from wall - A (mm)	Tube Qty	Water Content L	Weight KG	Colour	▲T30 Watts	▲T50 Watts	Element Output	Element Type	Colour	▲T30 Watts	▲T50 Watts	Element Output	Element Type
600	280	280/190	70/90	35/55	3	0.58	4.6	Coloured	121	240	150W	A, A+	Polished	116	228	150W	A, A+
1200	280	280/190	70/90	35/55	3	1.00	6.7	Coloured	222	443	300W	A, A+	N/A	N/A	N/A	N/A	N/A
1200	375	375/285	70/90	35/55	4	1.40	8.5	Coloured	296	591	300W	A, A+	N/A	N/A	N/A	N/A	N/A
1200	470	470/380	70/90	35/55	5	1.70	13.5	Coloured	370	738	600W	A, A+	N/A	N/A	N/A	N/A	N/A
1200	565	565/475	70/90	35/55	6	2.00	16.2	Coloured	444	886	600W	A, A+	N/A	N/A	N/A	N/A	N/A
1200	660	660/570	70/90	35/55	7	2.40	13.9	Coloured	518	1034	750W	A, A+	N/A	N/A	N/A	N/A	N/A
1800	280	280/190	70/90	35/55	3	1.75	10.0	Coloured	317	631	450W	A, A+	Polished	298	594	450W	A, A+
1800	375	375/285	70/90	35/55	4	2.33	13.1	Coloured	422	841	750W	A, A+	Polished	398	792	750W	A, A+
1800	470	470/380	70/90	35/55	5	2.91	16.2	Coloured	528	1051	900W	A, A+	Polished	497	990	900W	A, A+
1800	565	565/475	70/90	35/55	6	3.52	19.5	Coloured	633	1262	1000W	A, A+	Polished	596	1188	1000W	A, A+
1800	660	660/570	70/90	35/55	7	4.05	22.3	Coloured	785*	1566*	1200W	A, A+	Polished	740*	1476*	1200W	A, A+

** Tappings C1 : Side connection, Tappings C2 : Bottom connection.

* Further heat output information available on eastbrooktrade.com **E&OA**

Watts to BTU conversion multiple is 3.41

Peretti - Horizontal

Height H (mm)	Width W (mm)	Tappings C (mm)	Distance from wall - D (mm)	Tappings from wall - A (mm)	Tube Qty	Water Content L	Weight KG	Colour	▲T30 Watts	▲T50 Watts	Element Output	Element Type	Colour	▲T30 Watts	▲T50 Watts	Element Output	Element Type
600	470	470	70/90	35/55	5	0.96	6.7	Coloured	202	400	300W	A, A+, C, H	Polished	194	379	300W	A, A+, C, H
600	660	660	70/90	35/55	7	1.34	9.1	Coloured	282	560	450W	A, A+, C, H	Polished	272	531	450W	A, A+, C, H
600	850	850	70/90	35/55	9	1.73	11.5	Coloured	363	720	600W	A, A+, C, H	Polished	349	683	600W	A, A+, C, H
600	1040	1040	70/90	35/55	11	2.11	13.9	Coloured	444	880	750W	A, A+, C, H	Polished	427	835	750W	A, A+, C, H
600	1230	1230	70/90	35/55	13	2.50	16.3	Coloured	524	1040	900W	A, A+, C, H	Polished	504	986	900W	A, A+, C, H
600	1420	1420	70/90	35/55	15	2.80	14.9	Coloured	564*	1125*	900W	A, A+, C, H	N/A	N/A	N/A	N/A	N/A
600	1610	1610	70/90	35/55	17	3.20	16.9	Coloured	639*	1276*	1000W	A, A+, C, H	N/A	N/A	N/A	N/A	N/A

* Further heat output information available on eastbrooktrade.com **E&OA**

Watts to BTU conversion multiple is 3.41

Technical Tables & Drawings

ROSANO - VERTICAL

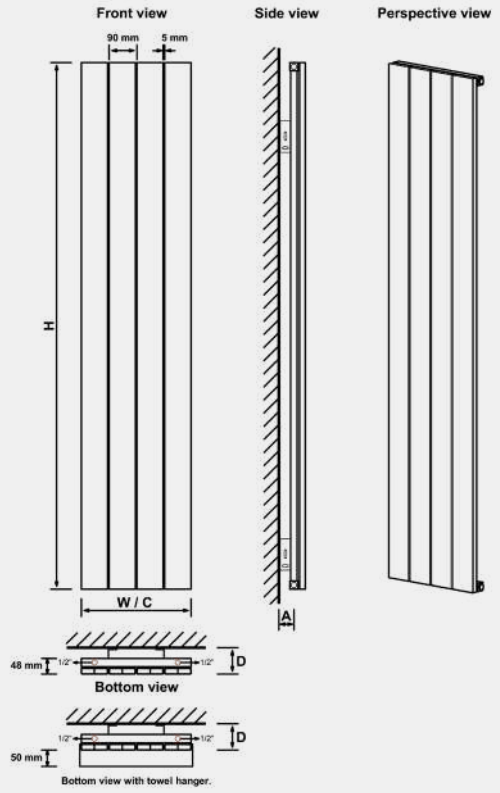

ROSANO - HORIZONTAL

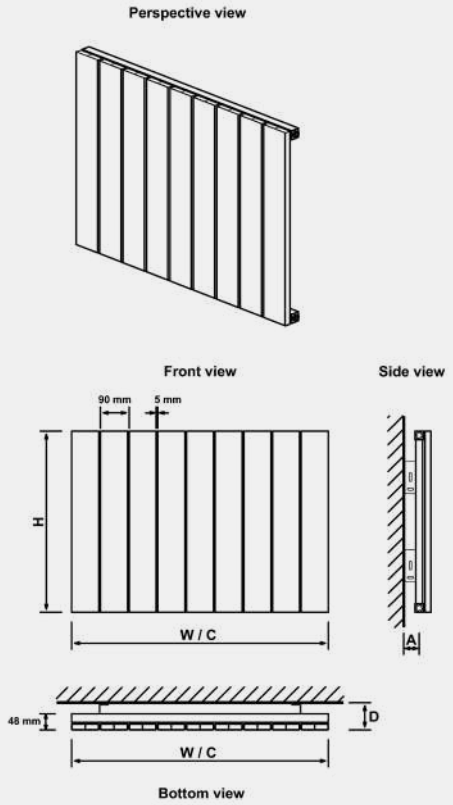

PERETTI - VERTICAL

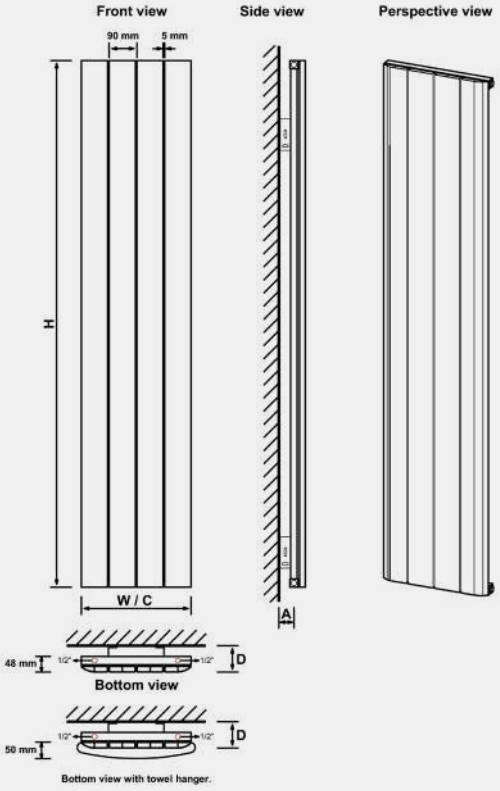

PERETTI - HORIZONTAL

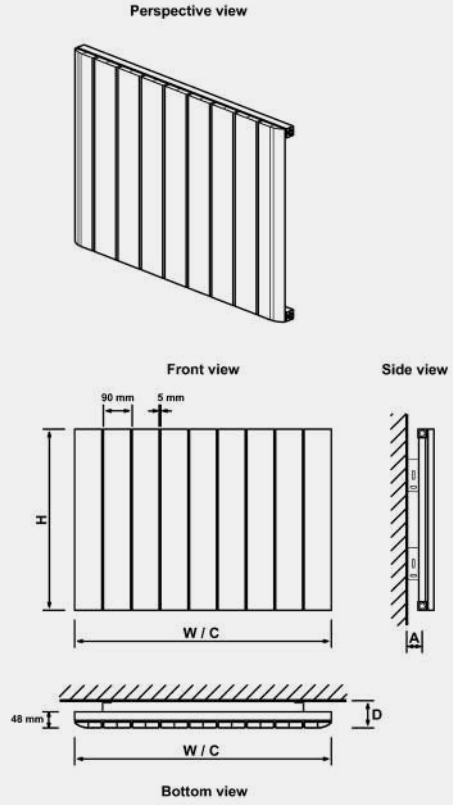

Technical Tables & Drawings

KINGSWOOD SLIMLINE - ALUMINIUM RANGE

Kingswood Slimline Vertical

Height H (mm)	Width W (mm)	Tappings C (mm)	Distance from wall - D (mm)	Tappings from wall - A (mm)	Tube Qty	Water Content L	Weight KG	Colour	▲T30 Watts	▲T50 Watts	Element Output	Element Type	Colour	▲T30 Watts	▲T50 Watts	Element Output	Element Type
1800	310	310	70/90	50/70	3	0.96	6.91	Coloured	367	760	N/A	N/A	-	-	-	-	-
1800	410	410	70/90	50/70	4	1.28	9.03	Coloured	458	951	N/A	N/A	-	-	-	-	-
1800	510	510	70/90	50/70	5	1.60	10.98	Coloured	550	1141	N/A	N/A	-	-	-	-	-
1800	610	610	70/90	50/70	6	1.92	13.02	Coloured	733	1521	N/A	N/A	-	-	-	-	-

Watts to BTU conversion multiple is 3.41

Kingswood Slimline Horizontal

Height H (mm)	Width W (mm)	Tappings C (mm)	Distance from wall - D (mm)	Tappings from wall - A (mm)	Tube Qty	Water Content L	Weight KG	Colour	▲T30 Watts	▲T50 Watts	Element Output	Element Type	Colour	▲T30 Watts	▲T50 Watts	Element Output	Element Type
600	410	410	70/90	50/70	4	0.56	3.57	Coloured	170	334	N/A	N/A	-	-	-	-	-
600	510	510	70/90	50/70	5	0.70	4.38	Coloured	213	418	N/A	N/A	-	-	-	-	-
600	610	610	70/90	50/70	6	0.84	5.19	Coloured	255	502	N/A	N/A	-	-	-	-	-
600	810	810	70/90	50/70	8	1.12	6.78	Coloured	340	669	N/A	N/A	-	-	-	-	-
600	1010	1010	70/90	50/70	10	1.40	8.40	Coloured	425	836	N/A	N/A	-	-	-	-	-
600	1210	1210	70/90	50/70	12	1.68	10.01	Coloured	510	1003	N/A	N/A	-	-	-	-	-
600	1410	1410	70/90	50/70	14	1.96	11.65	Coloured	595	1170	N/A	N/A	-	-	-	-	-

Watts to BTU conversion multiple is 3.41

Kingswood Slimline Towel Rail

Height H (mm)	Width W (mm)	Tappings C (mm)	Distance from wall - D (mm)	Tappings from wall - A (mm)	Tube Qty	Water Content L	Weight KG	Colour	▲T30 Watts	▲T50 Watts	Element Output	Element Type	Colour	▲T30 Watts	▲T50 Watts	Element Output	Element Type
820	500	471	108-128	90-110	6	0.78	5.37	Coloured	188	351	150W	A, A+	-	-	-	-	-
820	600	571	108-128	90-110	6	0.84	6.05	Coloured	215	404	150W	A, A+	-	-	-	-	-
1220	500	471	108-128	90-110	8	1.04	7.44	Coloured	259	492	300W	A, A+	-	-	-	-	-
1220	600	571	108-128	90-110	8	1.12	8.37	Coloured	294	563	300W	A, A+	-	-	-	-	-
1820	500	471	108-128	90-110	12	1.56	10.86	Coloured	386	734	600W	A, A+	-	-	-	-	-
1820	600	571	108-128	90-110	12	1.68	12.23	Coloured	434	827	750W	A, A+	-	-	-	-	-

Watts to BTU conversion multiple is 3.41

QUEENSWOOD VERTICAL / HORIZONTAL - ALUMINIUM RANGE

Queenswood Vertical / Horizontal

Height H (mm)	Width W (mm)	Tappings C (mm)	Distance from wall - D (mm)	Tappings from wall - A (mm)	Tube Qty	Water Content L	Weight KG	Colour	▲T30 Watts	▲T50 Watts	Element Output	Element Type	Colour	▲T30 Watts	▲T50 Watts	Element Output	Element Type
600	485	485	94	59	5	1.3	6.1	Coloured	292	582	450W	A, A+	-	-	-	-	-
600	582	582	94	59	6	1.6	7.3	Coloured	351	699	450W	A, A+	-	-	-	-	-
600	679	679	94	59	7	1.9	8.5	Coloured	409	815	600W	A+	-	-	-	-	-
600	873	873	94	59	9	2.4	10.9	Coloured	526	1048	900W	A+	-	-	-	-	-
600	1067	1067	94	59	11	3	13.3	Coloured	643	1281	900W	A+	-	-	-	-	-
600	1261	1261	94	59	13	3.5	15.5	Coloured	760	1513	1200W	A, A+	-	-	-	-	-
600	1455	1455	94	59	15	4.1	17.9	Coloured	877	1746	1200W	A, A+	-	-	-	-	-
600	1649	1649	94	59	17	4.6	20.3	Coloured	993	1979	1200W	A, A+	-	-	-	-	-
1800	291	291	94	59	3	1.4	10	Coloured	429	867	N/A	N/A	-	-	-	-	-
1800	388	388	94	59	4	1.9	13.3	Coloured	572	1156	N/A	N/A	-	-	-	-	-
1800	485	485	94	59	5	2.4	16.5	Coloured	715	1446	N/A	N/A	-	-	-	-	-
1800	582	582	94	59	6	2.9	20	Coloured	858	1735	N/A	N/A	-	-	-	-	-

Watts to BTU conversion multiple is 3.41

Kingswood Slimline Vertical / Horizontal

Kingswood Slimline Towel Rail

Queenswood Vertical

Queenswood Horizontal

Technical Tables & Drawings

KINGSWOOD SLIMLINE

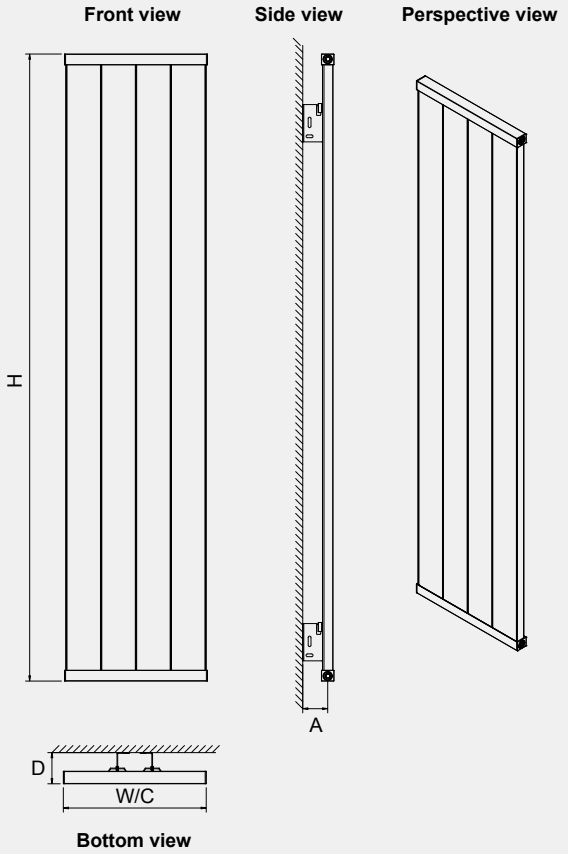

KINGSWOOD SLIMLINE TOWEL RAIL

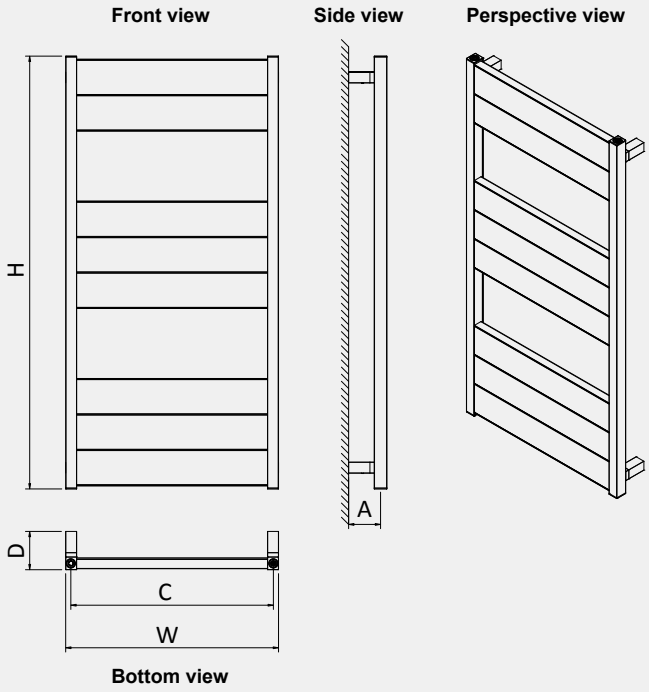

QUEENSWOOD - VERTICAL

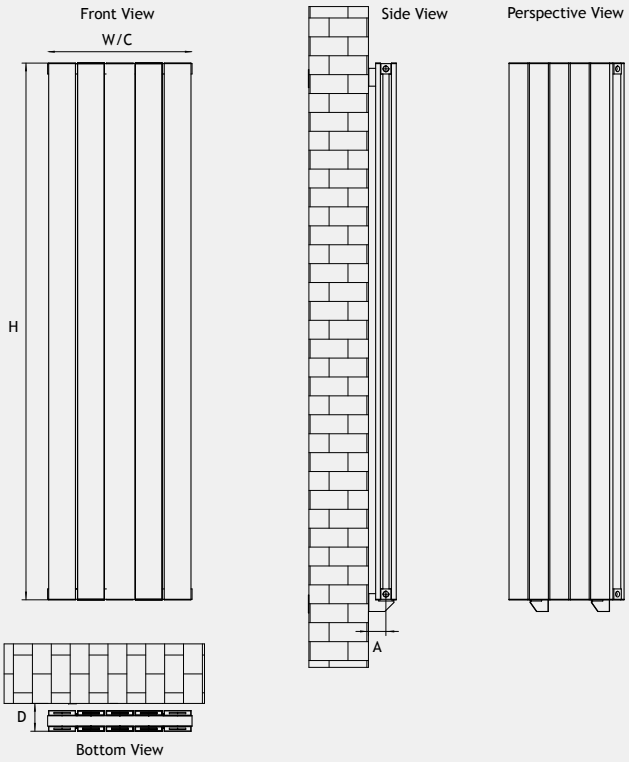

QUEENSWOOD - HORIZONTAL

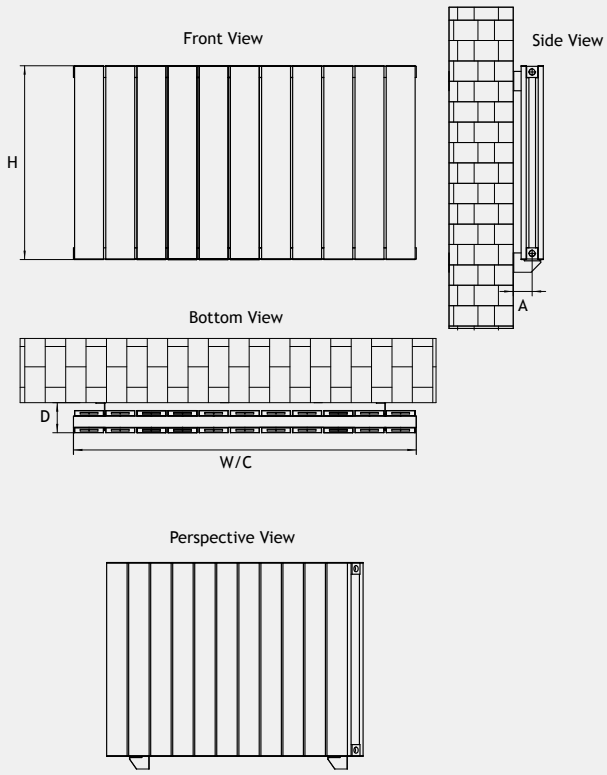

Technical Tables & Drawings

MERSEY VERTICAL - ALUMINIUM RANGE

Mersey Vertical

Height H (mm)	Width W (mm)	Tappings C1/C2 (mm)	Distance from wall - D (mm)	Tappings from wall - A (mm)	Tube Qty	Water Content L	Weight KG	Colour	▲T30 Watts	▲T50 Watts	Element Output	Element Type	Colour	▲T30 Watts	▲T50 Watts	Element Output	Element Type
1800	280	280	76	38	3	-	6.64	Coloured	314	612	N/A	N/A	-	-	-	-	-
1800	375	375	76	38	4	-	8.75	Coloured	418	816	N/A	N/A	-	-	-	-	-
1800	470	470	76	38	5	-	10.86	Coloured	523	1019	N/A	N/A	-	-	-	-	-
1800	565	565	76	38	6	-	12.98	Coloured	627	1223	N/A	N/A	-	-	-	-	-
1800	660	660	76	38	7	-	15.09	Coloured	732	1427	N/A	N/A	-	-	-	-	-

Watts to BTU conversion multiple is 3.41

TRENT VERTICAL - ALUMINIUM RANGE

Trent Vertical

Height H (mm)	Width W (mm)	Tappings C (mm)	Distance from wall - D (mm)	Tappings from wall - A (mm)	Tube Qty	Water Content L	Weight KG	Colour	▲T30 Watts	▲T50 Watts	Element Output	Element Type	Colour	▲T30 Watts	▲T50 Watts	Element Output	Element Type
1800	280	280	76	38	3	-	6.58	Coloured	301	597	N/A	N/A	-	-	-	-	-
1800	375	375	76	38	4	-	8.68	Coloured	401	796	N/A	N/A	-	-	-	-	-
1800	470	470	76	38	5	-	10.77	Coloured	501	995	N/A	N/A	-	-	-	-	-
1800	565	565	76	38	6	-	12.87	Coloured	602	1194	N/A	N/A	-	-	-	-	-
1800	660	660	76	38	7	-	14.97	Coloured	702	1393	N/A	N/A	-	-	-	-	-

Watts to BTU conversion multiple is 3.41

ADDINGTON ALUMINIUM - ALUMINIUM RANGE

Addington Aluminium Type10 - Vertical & Horizontal

Height H (mm)	Width W (mm)	Tappings C (mm)	Distance from wall - D (mm)	Tappings from wall - A (mm)	Tube Qty	Water Content L	Weight KG	Colour	▲T30 Watts	▲T50 Watts	Element Output	Element Type
500	514	514	76.5	45	7	1.14	5.83	Coloured	171	338	150W	A
500	588	588	76.5	45	8	1.3	6.66	Coloured	195	387	150W	A
600	292	292	76.5	45	4	0.76	3.81	Coloured	136	253	150W	A
600	366	366	76.5	45	5	0.96	4.6	Coloured	171	316	150W	A
600	440	440	76.5	45	6	1.15	5.66	Coloured	205	379	150W	A
600	514	514	76.5	45	7	1.34	6.42	Coloured	239	442	300W	A
600	588	588	76.5	45	8	1.53	7.39	Coloured	273	505	300W	A
600	662	662	76.5	45	9	1.72	8.26	Coloured	307	568	300W	A
600	810	810	76.5	45	11	2.1	10.1	Coloured	375	694	300W	A
600	1032	1032	76.5	45	14	2.67	12.86	Coloured	477	884	600W	A
600	1180	1180	76.5	45	16	3.06	15.1	Coloured	546	1010	600W	A
600	1254	1254	76.5	45	17	3.25	15.96	Coloured	580	1073	600W	A
600	1402	1402	76.5	45	19	4.18	17.86	Coloured	648	1199	750W	A
600	1624	1624	76.5	45	21	4.84	20.71	Coloured	750	1389	900W	A
600	1772	1772	76.5	45	23	5.28	22.61	Coloured	818	1515	900W	A
800	514	514	76.5	45	7	1.74	8.02	Coloured	255	520	300W	A
800	588	588	76.5	45	8	1.98	9.16	Coloured	292	595	300W	A
1000	514	514	76.5	45	7	2.13	9.43	Coloured	294	596	300W	A
1000	588	588	76.5	45	8	2.43	10.74	Coloured	336	681	300W	A
1200	514	514	76.5	45	7	2.53	10.72	Coloured	356	727	300W	A
1200	588	588	76.5	45	8	2.89	12.23	Coloured	407	831	600W	A
1400	514	514	76.5	45	7	2.93	12.13	Coloured	401	792	600W	A
1400	588	588	76.5	45	8	3.34	13.88	Coloured	459	905	600W	A
1800	292	292	76.5	45	4	2.12	8.65	Coloured	293	606	600W	A
1800	366	366	76.5	45	5	2.66	10.19	Coloured	367	757	600W	A
1800	440	440	76.5	45	6	3.19	12.85	Coloured	440	909	600W	A
1800	514	514	76.5	45	7	3.72	15.05	Coloured	513	1060	900W	A
1800	588	588	76.5	45	8	4.25	17.09	Coloured	587	1211	900W	A
1800	662	662	76.5	45	9	4.79	19.13	Coloured	660	1363	900W	A

Watts to BTU conversion multiple is 3.41

Technical Tables & Drawings

MERSEY - VERTICAL

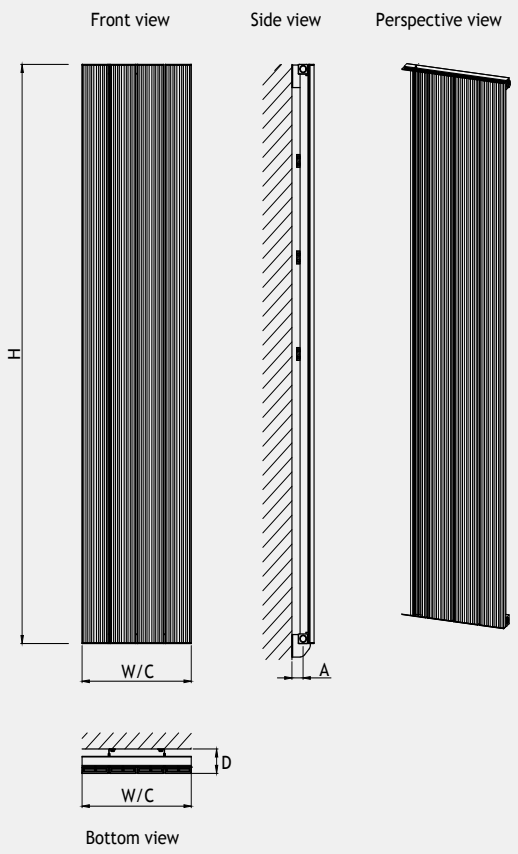

TRENT - VERTICAL

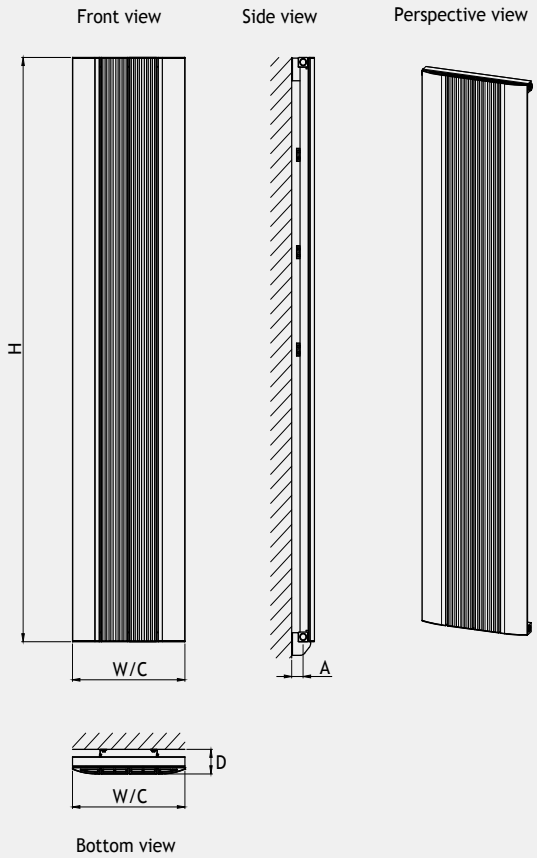

ADDINGTON ALUMINIUM TYPE 10 HORIZONTAL

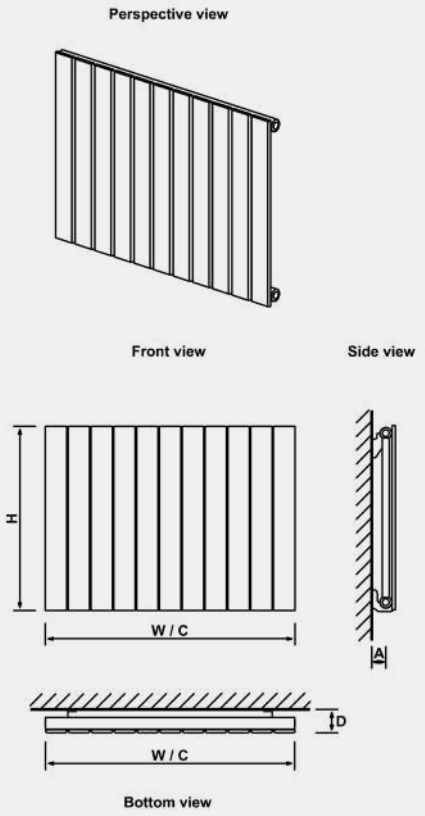

ADDINGTON ALUMINIUM TYPE 10 VERTICAL

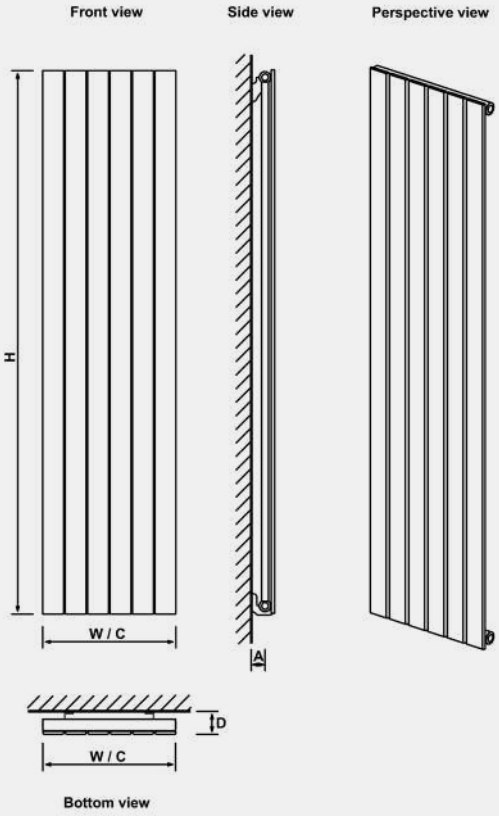

Technical Tables & Drawings

ADDINGTON ALUMINIUM - ALUMINIUM RANGE

Addington Aluminium Type20 - Vertical & Horizontal

Height H (mm)	Width W (mm)	Tappings C (mm)	Distance from wall - D (mm)	Tappings from wall - A (mm)	Tube Qty	Water Content L	Weight KG	Colour	▲T30 Watts	▲T50 Watts	Element Output	Element Type
600	292	292	96.5	65	8	0.76	5.09	Coloured	185	352	150W	A
600	366	366	96.5	65	10	0.96	6.34	Coloured	232	440	300W	A
600	440	440	96.5	65	12	1.15	7.53	Coloured	278	528	300W	A
600	514	514	96.5	65	14	1.34	8.54	Coloured	324	616	300W	A
600	588	588	96.5	65	16	1.53	9.79	Coloured	371	704	300W	A
600	662	662	96.5	65	18	1.72	11.34	Coloured	417	792	300W	A
600	810	810	96.5	65	22	2.1	13.42	Coloured	510	968	600W	A
600	1032	1032	96.5	65	28	2.67	17.53	Coloured	649	1232	600W	A
600	1180	1180	96.5	65	32	3.06	19.49	Coloured	741	1408	900W	A
600	1254	1254	96.5	65	34	3.25	20.68	Coloured	788	1496	900W	A
600	1402	1402	96.5	65	38	4.18	23.06	Coloured	880	1672	900W	A
600	1624	1624	96.5	65	42	4.84	26.63	Coloured	1019	1935	900W	A
600	1772	1772	96.5	65	46	5.28	29.01	Coloured	1112	2111	900W	A
1800	366	366	96.5	65	10	2.66	15.89	Coloured	452	909	600W	A
1800	440	440	96.5	65	12	3.19	18.82	Coloured	542	1091	900W	A
1800	514	514	96.5	65	14	3.72	21.94	Coloured	633	1273	900W	A
1800	588	588	96.5	65	16	4.25	25.18	Coloured	723	1455	900W	A
1800	662	662	96.5	65	18	4.79	28.42	Coloured	814	1637	900W	A

Watts to BTU conversion multiple is 3.41

CHARLTON - ALUMINIUM RANGE

Charlton - Vertical

Height H (mm)	Width W (mm)	Tappings C (mm)	Distance from wall - D (mm)	Tappings from wall - A (mm)	Tube Qty	Water Content L	Weight KG	Colour	▲T30 Watts	▲T50 Watts	Element Output	Element Type
600	280	280	71/91	33/53	3	0.6	3.75	Coloured	123	240	150W	A, A+, F, G
1200	280	280	71/91	33/53	3	1.2	4.6	Coloured	238	461	300W	A, A+, F, G
1200	375	375	71/91	33/53	4	1.6	6.1	Coloured	315	611	300W	A, A+, F, G
1200	470	470	71/91	33/53	5	2	7.7	Coloured	392	760	450W	A, A+, F, G
1200	565	565	71/91	33/53	6	2.4	9.2	Coloured	468	908	600W	A, A+, F, G
1800	280	280	71/91	33/53	3	1.8	8.1	Coloured	345	667	450W	A, A+, F, G
1800	375	375	71/91	33/53	4	2.4	10.3	Coloured	457	884	600W	A, A+, F, G
1800	470	470	71/91	33/53	5	3	12.8	Coloured	569	1099	750W	A, A+, F, G
1800	565	565	71/91	33/53	6	3.5	14.8	Coloured	679	1313	1000W	A, A+, F, G

Watts to BTU conversion multiple is 3.41

Charlton - Horizontal

Height H (mm)	Width W (mm)	Tappings C (mm)	Distance from wall - D (mm)	Tappings from wall - A (mm)	Tube Qty	Water Content L	Weight KG	Colour	▲T30 Watts	▲T50 Watts	Element Output	Element Type
600	470	470	71/91	33/53	5	1.1	5.7	Coloured	203	396	300W	A, A+, C, H
600	660	660	71/91	33/53	7	1.5	7.8	Coloured	282	550	450W	A, A+, C, H
600	850	850	71/91	33/53	9	2	9.5	Coloured	360	701	600W	A, A+, C, H
600	1040	1040	71/91	33/53	11	2.4	11.5	Coloured	437	852	750W	A, A+, C, H
600	1230	1230	71/91	33/53	13	2.9	13.5	Coloured	514	1002	900W	A, A+, C, H
600	1420	1420	71/91	33/53	15	3.3	12.3	Coloured	590	1151	900W	A, A+, C, H

Watts to BTU conversion multiple is 3.41

Addington Aluminium Type 20

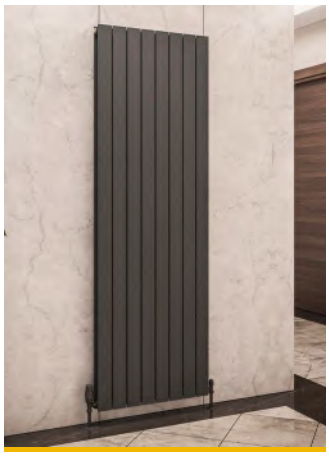

Addington Aluminium Type 20

Charlton Vertical

Charlton Horizontal

Technical Tables & Drawings

ADDINGTON ALUMINIUM TYPE 20 HORIZONTAL

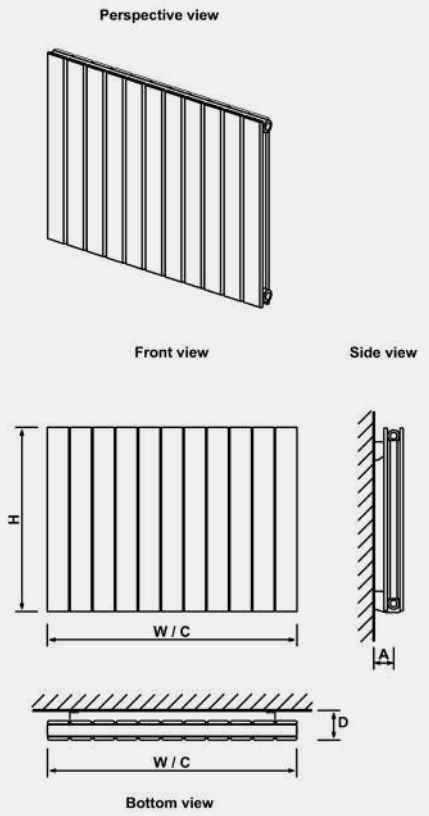

ADDINGTON ALUMINIUM TYPE 20 VERTICAL

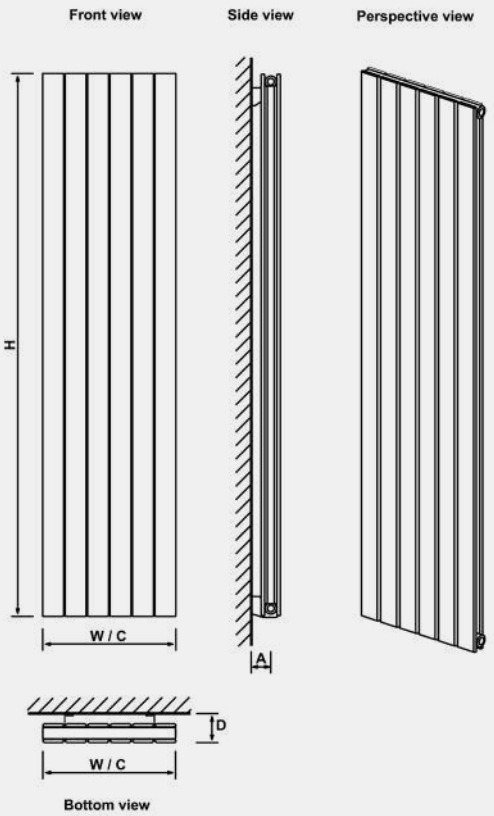

CHARLTON - VERTICAL

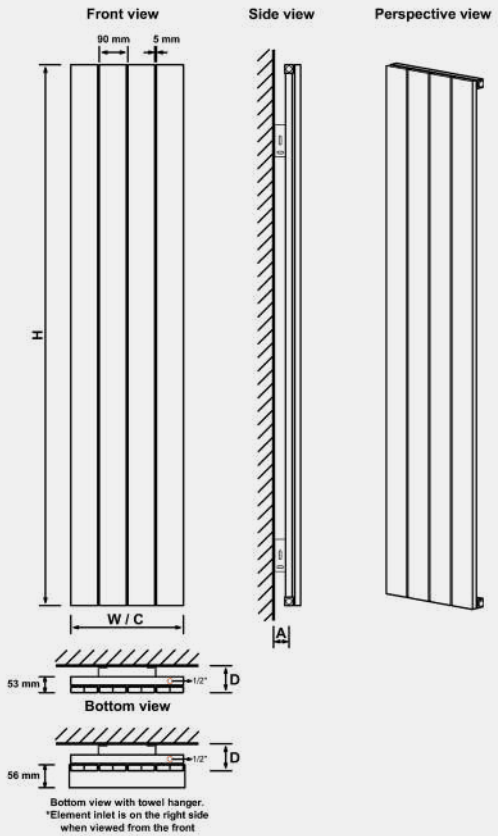

CHARLTON - HORIZONTAL

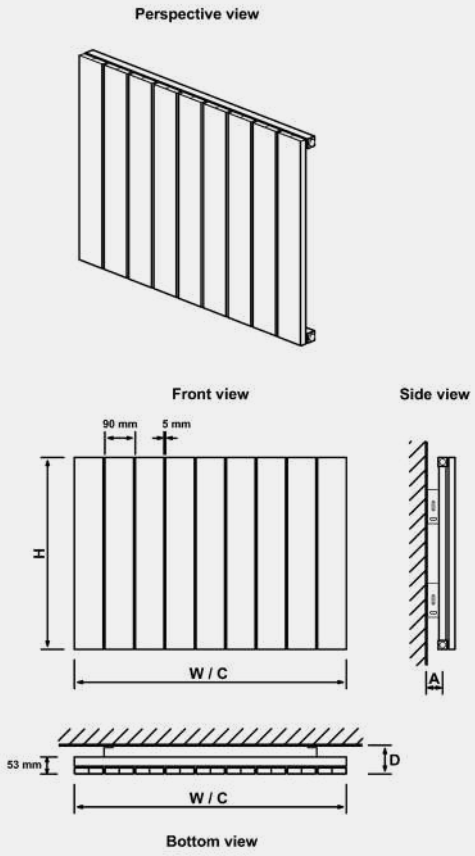

Technical Tables & Drawings

WITHINGTON - ALUMINIUM RANGE

Withington - Vertical

Height H (mm)	Width W (mm)	Tappings C (mm)	Distance from wall - D (mm)	Tappings from wall - A (mm)	Tube Qty	Water Content L	Weight KG	Colour	▲T30 Watts	▲T50 Watts	Element Output	Element Type
600	280	280	71/91	33/53	3	0.6	3.75	Coloured	122	240	150W	A, A+, F, G
1200	280	280	71/91	33/53	3	1.2	4.3	Coloured	223	439	300W	A, A+, F, G
1200	375	375	71/91	33/53	4	1.6	5.8	Coloured	296	583	300W	A, A+, F, G
1200	470	470	71/91	33/53	5	2	7.3	Coloured	368	724	450W	A, A+, F, G
1200	565	565	71/91	33/53	6	2.4	8.8	Coloured	440	865	600W	A, A+, F, G
1800	280	280	71/91	33/53	3	1.8	8	Coloured	322	636	450W	A, A+, F, G
1800	375	375	71/91	33/53	4	2.4	10.2	Coloured	427	844	600W	A, A+, F, G
1800	470	470	71/91	33/53	5	3	12.7	Coloured	531	1049	750W	A, A+, F, G
1800	565	565	71/91	33/53	6	3.5	14.8	Coloured	634	1253	1000W	A, A+, F, G

Watts to BTU conversion multiple is 3.41

Withington - Horizontal

Height H (mm)	Width W (mm)	Tappings C (mm)	Distance from wall - D (mm)	Tappings from wall - A (mm)	Tube Qty	Water Content L	Weight KG	Colour	▲T30 Watts	▲T50 Watts	Element Output	Element Type
600	470	470	71/91	33/53	5	1.1	5.7	Coloured	202	395	300W	A, A+, C, H
600	660	660	71/91	33/53	7	1.5	7.8	Coloured	280	548	450W	A, A+, C, H
600	850	850	71/91	33/53	9	2	9.5	Coloured	358	700	600W	A, A+, C, H
600	1040	1040	71/91	33/53	11	2.4	11.5	Coloured	434	850	750W	A, A+, C, H
600	1230	1230	71/91	33/53	13	2.9	13.5	Coloured	511	1000	900W	A, A+, C, H
600	1420	1420	71/91	33/53	15	3.3	13	Coloured	587	1148	900W	A, A+, C, H

Watts to BTU conversion multiple is 3.41

MALMESBURY - ALUMINIUM RANGE

Malmesbury - Vertical

Height H (mm)	Width W (mm)	Tappings C (mm)	Distance from wall - D (mm)	Tappings from wall - A (mm)	Tube Qty	Water Content L	Weight KG	Colour	▲T30 Watts	▲T50 Watts	Element Output	Element Type
1200	185	185	71/91	33/53	2	0.8	2.9	Coloured	153	296	150W	A, A+, F, G
1200	280	280	71/91	33/53	3	1.2	4.4	Coloured	226	437	300W	A, A+, F, G
1200	375	375	71/91	33/53	4	1.6	5.7	Coloured	297	576	300W	A, A+, F, G
1200	470	470	71/91	33/53	5	2	7.3	Coloured	368	713	450W	A, A+, F, G
1200	565	565	71/91	33/53	6	2.4	8.3	Coloured	437	848	600W	A, A+, F, G
1800	185	185	71/91	33/53	2	1.18	5.6	Coloured	220	429	300W	A, A+, F, G
1800	280	280	71/91	33/53	3	1.8	7.9	Coloured	325	634	450W	A, A+, F, G
1800	375	375	71/91	33/53	4	2.4	10.1	Coloured	428	835	600W	A, A+, F, G
1800	470	470	71/91	33/53	5	3	12.6	Coloured	530	1033	750W	A, A+, F, G
1800	565	565	71/91	33/53	6	3.5	13.8	Coloured	630	1229	1000W	A, A+, F, G

Watts to BTU conversion multiple is 3.41

Malmesbury - Horizontal

Height H (mm)	Width W (mm)	Tappings C (mm)	Distance from wall - D (mm)	Tappings from wall - A (mm)	Tube Qty	Water Content L	Weight KG	Colour	▲T30 Watts	▲T50 Watts	Element Output	Element Type
500	375	375	79/99	33/53	4	0.94	4.3	Coloured	140	269	150W	A, A+, C, H
500	470	470	79/99	33/53	5	1.18	5.1	Coloured	173	333	150W	A, A+, C, H
500	565	565	79/99	33/53	6	1.41	6	Coloured	205	396	300W	A, A+, C, H
600	375	375	79/99	33/53	4	1.75	4.6	Coloured	163	314	150W	A, A+, C, H
600	470	470	79/99	33/53	5	2.17	5.7	Coloured	202	389	300W	A, A+, C, H
600	565	565	79/99	33/53	6	2.5	6.6	Coloured	240	462	300W	A, A+, C, H
600	850	850	79/99	33/53	9	3.75	9.5	Coloured	352	680	450W	A, A+, C, H
600	1040	1040	79/99	33/53	11	4.58	11.3	Coloured	426	822	600W	A, A+, C, H
600	1230	1230	79/99	33/53	13	5.42	13	Coloured	499	963	750W	A, A+, C, H
600	1420	1420	79/99	33/53	15	3.3	12.6	Coloured	572	1103	900W	A, A+, C, H

Watts to BTU conversion multiple is 3.41

Withington Vertical

Withington Horizontal

Malmesbury Vertical

Malmesbury Horizontal

Technical Tables & Drawings

WITHINGTON - VERTICAL

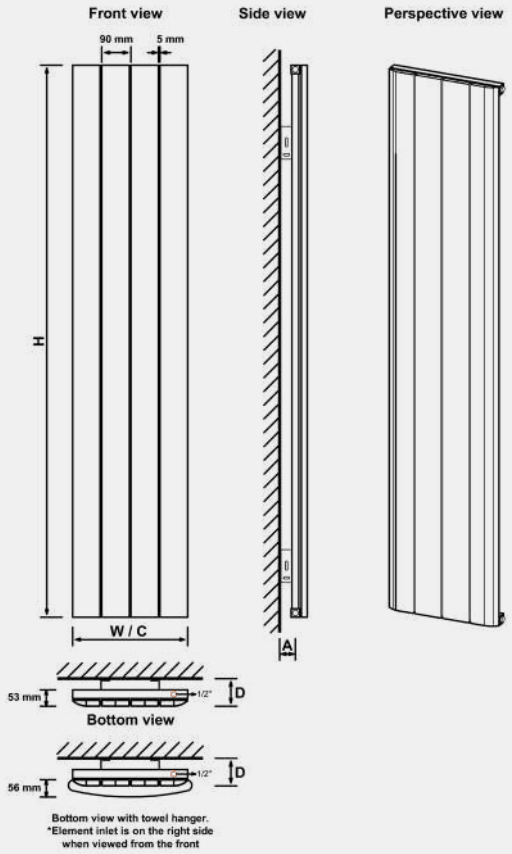

WITHINGTON - HORIZONTAL

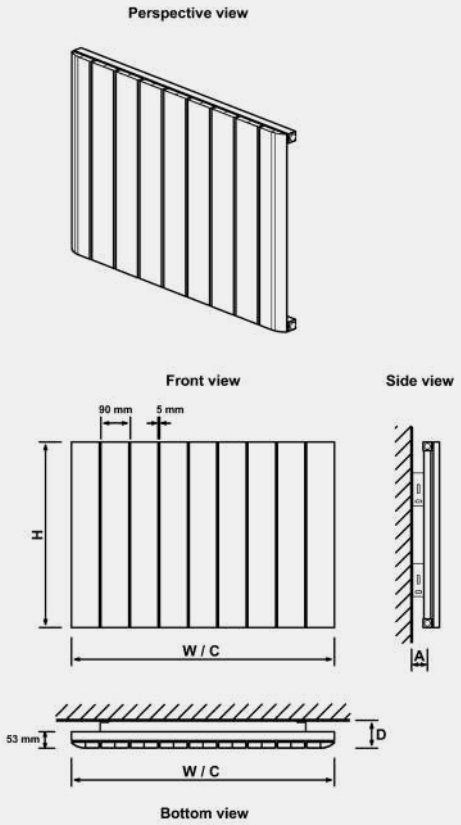

MALMESBURY - VERTICAL

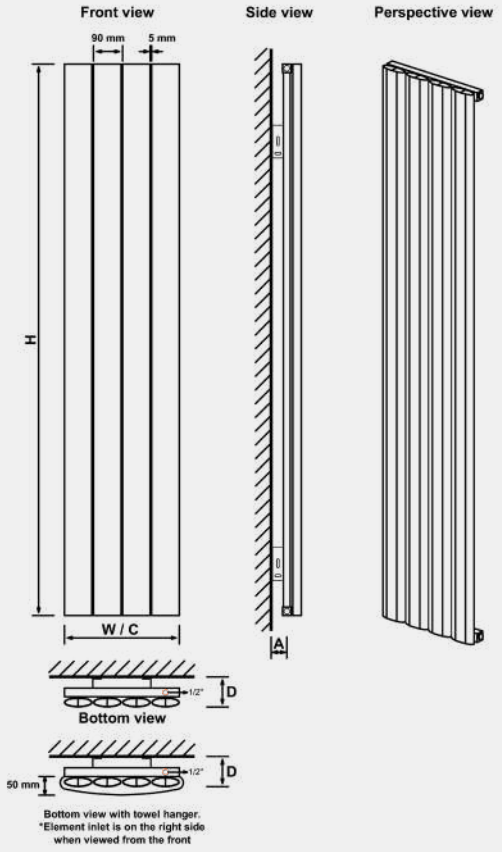

MALMESBURY - HORIZONTAL

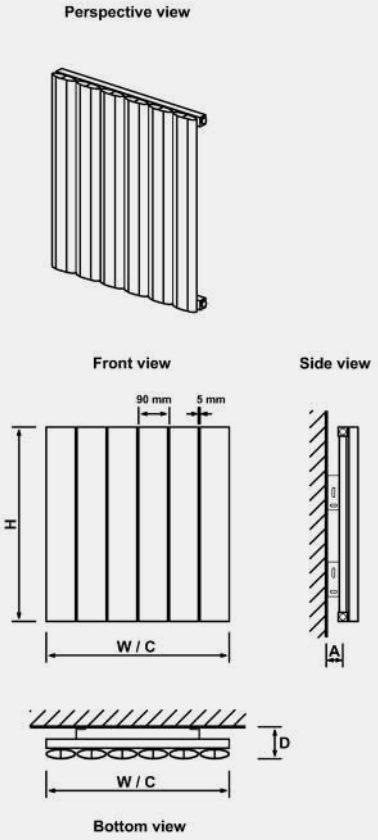

Technical Tables & Drawings

BERKELEY - ALUMINIUM RANGE

Berkeley - Horizontal

Height H (mm)	Width W (mm)	Tappings C (mm)	Distance from wall - D (mm)	Tappings from wall - A (mm)	Tube Qty	Water Content L	Weight KG	Colour	▲T30 Watts	▲T50 Watts	Element Output	Element Type
603	600	600	70	50	6	1.3	5.7	Coloured	186	342	N/A	N/A
603	800	800	70	50	6	1.7	5.8	Coloured	244	449	N/A	N/A
603	1000	1000	70	50	6	2	6.33	Coloured	302	555	N/A	N/A
603	1200	1200	70	50	6	2.4	7.22	Coloured	359	660	N/A	N/A
603	1400	1400	70	50	6	2.8	8.8	Coloured	415	763	N/A	N/A
603	1600	1600	70	50	6	3.1	9.6	Coloured	472	866	N/A	N/A
603	1800	1800	70	50	6	3.5	10.5	Coloured	527	969	N/A	N/A
603	2000	2000	70	50	6	3.8	11.3	Coloured	583	1071	N/A	N/A

Watts to BTU conversion multiple is 3.41

TORDINO - ALUMINIUM RANGE

Tordino - Vertical

Height H (mm)	Width W (mm)	Tappings C (mm)	Distance from wall - D (mm)	Tappings from wall - A (mm)	Tube Qty	Water Content L	Weight KG	Colour	▲T30 Watts	▲T50 Watts	Element Output	Element Type
1800	280	280	80/100	31/51	3	1.7	6.5	Coloured	359	686	450W	A, A+, F, G
1800	375	375	80/100	31/51	4	2.3	8.6	Coloured	477	912	600W	A, A+, F, G
1800	470	470	80/100	31/51	5	2.9	10.4	Coloured	595	1136	750W	A, A+, F, G
1800	565	565	80/100	31/51	6	3.5	12.5	Coloured	712	1360	1000W	A, A+, F, G

Watts to BTU conversion multiple is 3.41

Tordino - Horizontal

Height H (mm)	Width W (mm)	Tappings C (mm)	Distance from wall - D (mm)	Tappings from wall - A (mm)	Tube Qty	Water Content L	Weight KG	Colour	▲T30 Watts	▲T50 Watts	Element Output	Element Type
600	470	470	80/100	31/51	5	1.1	4.3	Coloured	208	409	300W	A, A+, C, H
600	660	660	80/100	31/51	7	1.5	6	Coloured	290	569	450W	A, A+, C, H
600	850	850	80/100	31/51	9	2	7.8	Coloured	371	728	600W	A, A+, C, H
600	1040	1040	80/100	31/51	11	2.4	9.5	Coloured	451	887	750W	A, A+, C, H
600	1230	1230	80/100	31/51	13	2.8	11.2	Coloured	531	1044	900W	A, A+, C, H

Watts to BTU conversion multiple is 3.41

Berkeley Horizontal

Tordino Vertical

Tordino Horizontal

Technical Tables & Drawings

BERKELEY - HORIZONTAL

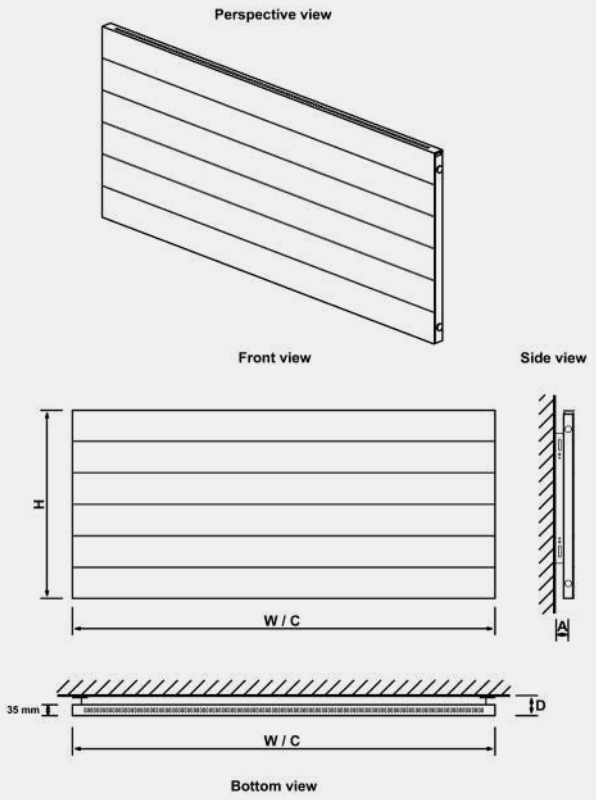

TORDINO - VERTICAL

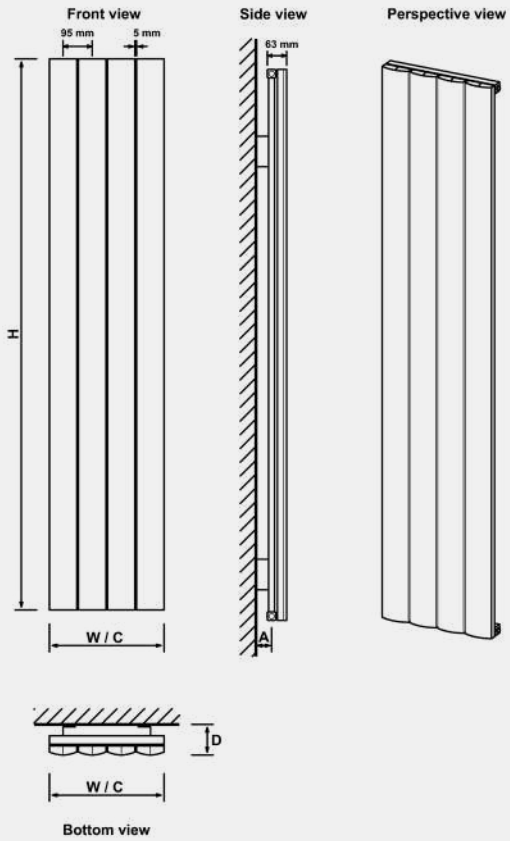

TORDINO - HORIZONTAL

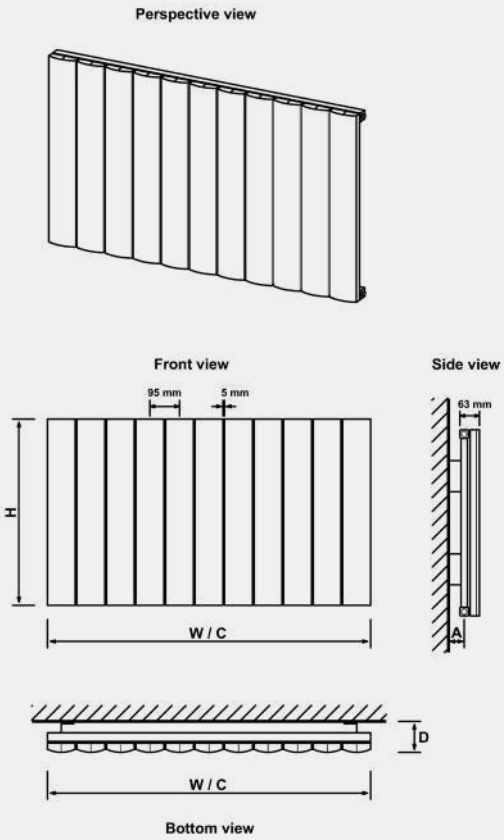

Technical Tables & Drawings

GUARDIA - ALUMINIUM RANGE

Guardia - Vertical

Height H (mm)	Width W (mm)	Tappings C (mm)	Distance from wall - D (mm)	Tappings from wall - A (mm)	Tube Qty	Water Content L	Weight KG	Colour	▲T30 Watts	▲T50 Watts	Element Output	Element Type
1200	280	280	110	65	3	1.14	9.16	Coloured	267	558	N/A	N/A
1200	375	375	110	65	4	1.52	12.12	Coloured	356	744	N/A	N/A
1200	470	470	110	65	5	1.9	15.05	Coloured	445	930	N/A	N/A
1200	565	565	110	65	6	2.27	18.24	Coloured	534	1116	N/A	N/A
1800	280	280	110	65	3	1.75	14.2	Coloured	381	801	N/A	N/A
1800	375	375	110	65	4	2.33	18.7	Coloured	508	1067	N/A	N/A
1800	470	470	110	65	5	2.91	23.1	Coloured	635	1334	N/A	N/A
1800	565	565	110	65	6	3.5	27.8	Coloured	732	1601	N/A	N/A
1800	660	660	110	65	7	3.85	28.95	Coloured	889	1868	N/A	N/A

Watts to BTU conversion multiple is 3.41

Guardia - Horizontal

Height H (mm)	Width W (mm)	Tappings C (mm)	Distance from wall - D (mm)	Tappings from wall - A (mm)	Tube Qty	Water Content L	Weight KG	Colour	▲T30 Watts	▲T50 Watts	Element Output	Element Type
600	470	470	110	65	5	0.96	9	Coloured	335	637	300W	A, A+, C, H
600	660	660	110	65	7	1.34	12.2	Coloured	497	891	450W	A, A+, C, H
600	850	850	110	65	9	1.73	15.6	Coloured	604	1146	600W	A, A+, C, H
600	1040	1040	110	65	11	2.11	19	Coloured	738	1400	900W	A, A+, H
600	1230	1230	110	65	13	2.5	22.3	Coloured	872	1655	1000W	A, A+
600	1420	1420	110	65	15	2.88	25.8	Coloured	1007	1910	1000W	A, A+
600	1610	1610	110	65	17	3.74	26.9	Coloured	1141	2164	1200W	A, A+
600	1800	1800	110	65	19	4.18	28.8	Coloured	1275	2419	1200W	A, A+

Watts to BTU conversion multiple is 3.41

HADLEIGH - ALUMINIUM RANGE

Hadleigh - Vertical

Height H (mm)	Width W (mm)	Tappings C (mm)	Distance from wall - D (mm)	Tappings from wall - A (mm)	Tube Qty	Water Content L	Weight KG	Colour	▲T30 Watts	▲T50 Watts	Element Output	Element Type
1200	275	275	98	65	4	1.52	9.56	Coloured	259	540	N/A	N/A
1200	415	415	98	65	6	2.27	14.17	Coloured	388	809	N/A	N/A
1200	485	485	98	65	7	2.65	15.82	Coloured	452	944	N/A	N/A
1200	555	555	98	65	8	3.03	17.92	Coloured	517	1079	N/A	N/A
1800	275	275	98	65	4	1.6	12.2	Coloured	352	739	N/A	N/A
1800	415	415	98	65	6	2.4	18.3	Coloured	528	1108	N/A	N/A
1800	485	485	98	65	7	2.8	21.3	Coloured	616	1292	N/A	N/A
1800	555	555	98	65	8	4.39	26.18	Coloured	704	1477	N/A	N/A

Watts to BTU conversion multiple is 3.41

Hadleigh - Horizontal

Height H (mm)	Width W (mm)	Tappings C (mm)	Distance from wall - D (mm)	Tappings from wall - A (mm)	Tube Qty	Water Content L	Weight KG	Colour	▲T30 Watts	▲T50 Watts	Element Output	Element Type
600	485	485	98	65	7	1.12	8.9	Coloured	288	576	400W	A, A+, C, H
600	625	625	98	65	9	1.44	11.4	Coloured	371	740	450W	A, A+, C, H
600	835	835	98	65	12	1.91	15.2	Coloured	494	987	600W	A, A+, C, H
600	1045	1045	98	65	15	2.39	19	Coloured	618	1234	900W	A, A+, C, H
600	1255	1255	98	65	18	2.86	22.8	Coloured	742	1480	1000W	A, A+, C, H
600	1395	1395	98	65	20	4.18	24.61	Coloured	824	1645	1200W	A, A+, C, H

Watts to BTU conversion multiple is 3.41

Guardia Vertical

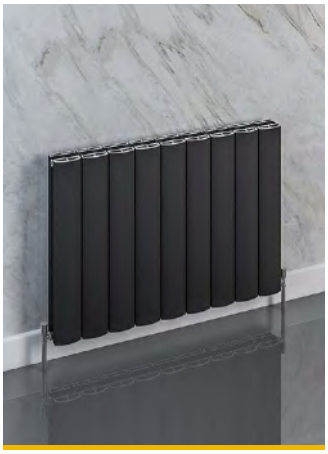

Guardia Horizontal

Hadleigh Vertical

Hadleigh Horizontal

Technical Tables & Drawings

GUARDIA - VERTICAL

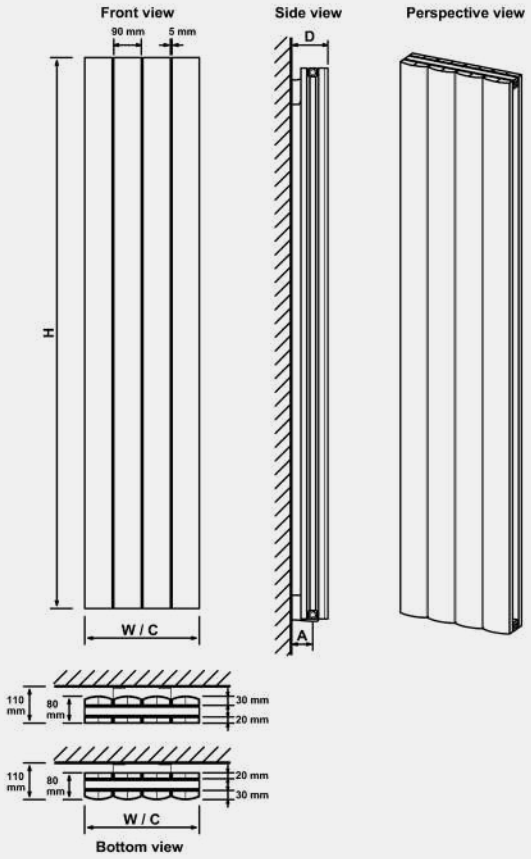

GUARDIA - HORIZONTAL

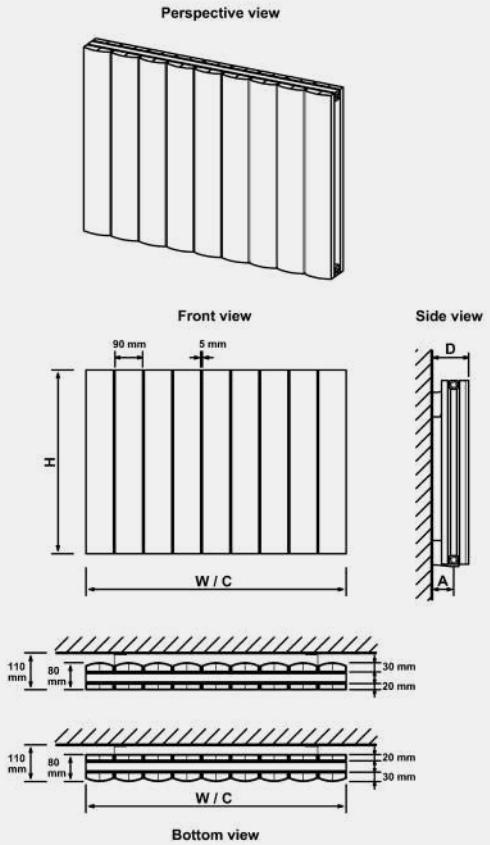

HADLEIGH - VERTICAL

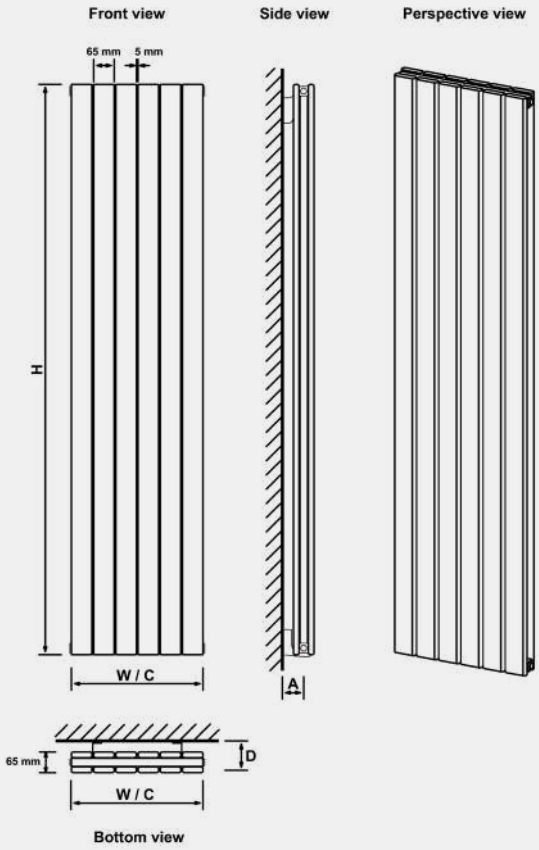

HADLEIGH - HORIZONTAL

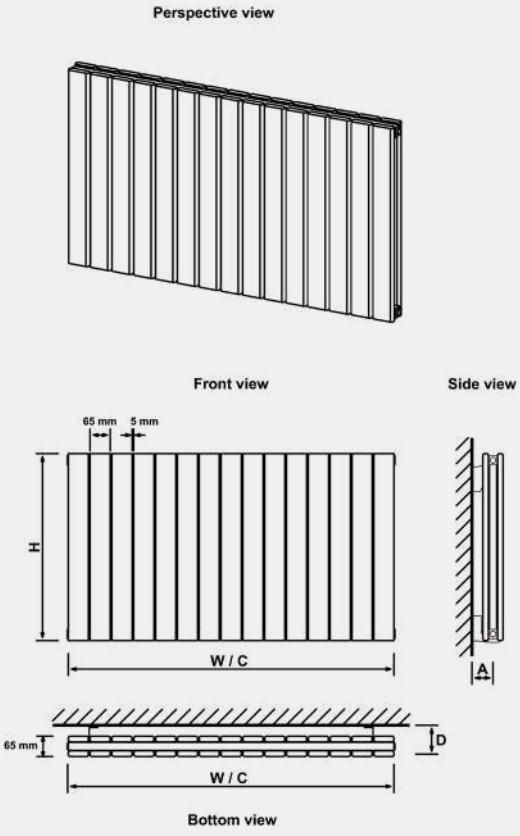

Technical Tables & Drawings

VESIMA - ALUMINIUM RANGE

Vesima - Vertical

Height H (mm)	Width W (mm)	Tappings C (mm)	Distance from wall - D (mm)	Tappings from wall - A (mm)	Tube Qty	Water Content L	Weight KG	Colour	▲T30 Watts	▲T50 Watts	Element Output	Element Type
1800	303	303	85/105	60/80	3	1.75	10.9	Coloured	350	716	600W	A
1800	403	403	85/105	60/80	4	2.34	14.2	Coloured	467	955	900W	A
1800	503	503	85/105	60/80	5	2.92	17.6	Coloured	584	1193	900W	A
1800	603	603	85/105	60/80	6	3.3	20.99	Coloured	700	1432	900W	A

Watts to BTU conversion multiple is 3.41

Vesima - Horizontal

Height H (mm)	Width W (mm)	Tappings C (mm)	Distance from wall - D (mm)	Tappings from wall - A (mm)	Tube Qty	Water Content L	Weight KG	Colour	▲T30 Watts	▲T50 Watts	Element Output	Element Type
600	503	503	85/105	60/80	5	0.97	7.1	Coloured	279	526	300W	A, C, H
600	603	603	85/105	60/80	6	1.16	8.4	Coloured	335	631	300W	A, C, H
600	803	803	85/105	60/80	8	1.55	10.9	Coloured	446	841	600W	A, C, H
600	1003	1003	85/105	60/80	10	1.94	13.5	Coloured	558	1051	900W	A, C, H
600	1203	1203	85/105	60/80	12	2.33	16.1	Coloured	669	1261	1000W	A, C, H
600	1403	1403	85/105	60/80	14	2.93	18.54	Coloured	781	1471	1200W	A, C, H

Watts to BTU conversion multiple is 3.41

PRESTON - ALUMINIUM RANGE

Preston - Vertical

Height H (mm)	Width W (mm)	Tappings C (mm)	Distance from wall - D (mm)	Tappings from wall - A (mm)	Tube Qty	Water Content L	Weight KG	Colour	▲T30 Watts	▲T50 Watts	Element Output	Element Type
1200	185	185	71-91	33-53	2	1.2	5.8	Coloured	154	296	150W	A, A+, F, G
1800	185	185	71-91	33-53	2	1.2	5.6	Coloured	222	427	300W	A, A+, F, G

Watts to BTU conversion multiple is 3.41

BERLINI - ALUMINIUM RANGE

Berlini - Vertical

Height H (mm)	Width W (mm)	Tappings C (mm)	Distance from wall - D (mm)	Tappings from wall - A (mm)	Tube Qty	Water Content L	Weight KG	Colour	▲T30 Watts	▲T50 Watts	Element Output	Element Type	Colour	▲T30 Watts	▲T50 Watts	Element Output	Element Type
1200	185	185	70/90	35/55	2	0.78	5.6	Coloured	125	247	150W	A, A+	Polished	118	233	150W	A, A+
1800	185	185	70/90	35/55	2	1.16	6.6	Coloured	275	508	300W	A, A+	Polished	207	396	300W	A, A+

Watts to BTU conversion multiple is 3.41

Vesima Vertical

Vesima Horizontal

Preston Vertical

Berlini Vertical

Technical Tables & Drawings

VESIMA - VERTICAL

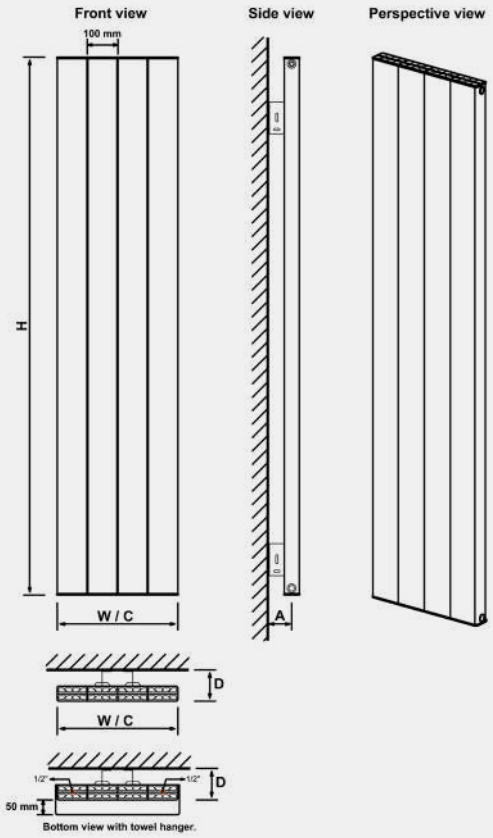

VESIMA - HORIZONTAL

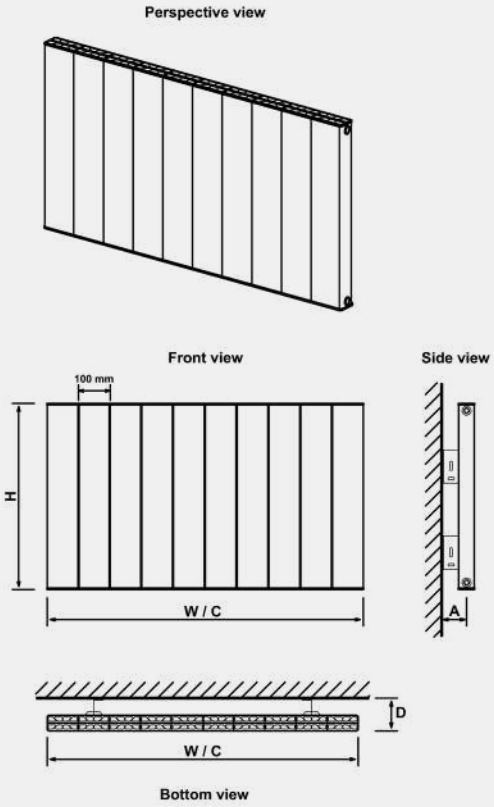

PRESTON - VERTICAL

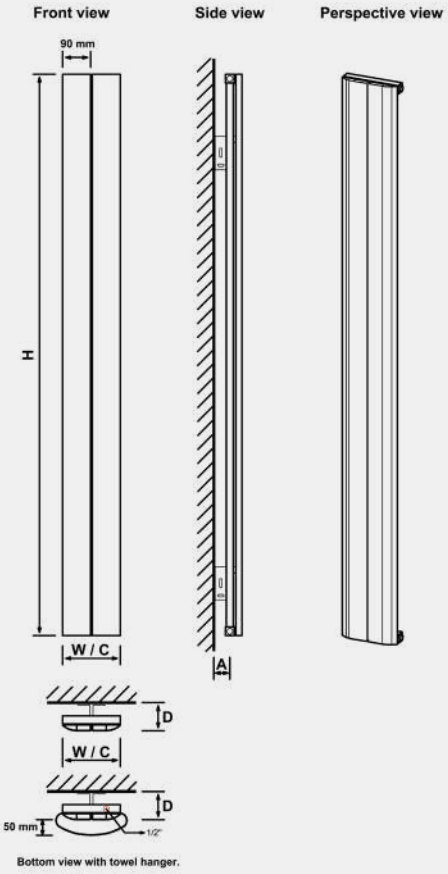

BERLINI - VERTICAL

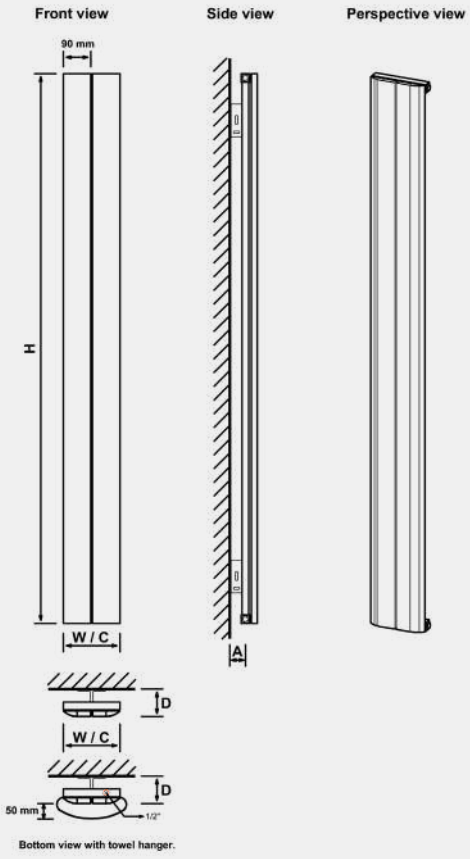

Technical Tables & Drawings

FAIRFORD - ALUMINIUM RANGE

Fairford - Vertical

Height H (mm)	Width W (mm)	Tappings C (mm)	Distance from wall - D (mm)	Tappings from wall - A (mm)	Tube Qty	Water Content L	Weight KG	Colour	▲T30 Watts	▲T50 Watts	Element Output	Element Type
1200	375	375	79/99	33/53	4	1.6	7.2	Coloured	302	596	450W	A, A+, F, G
1200	565	565	79/99	33/53	6	2.4	11	Coloured	454	897	750W	A, A+, F, G
1800	375	375	79/99	33/53	4	2.33	9.9	Coloured	449	892	750W	A, A+, F, G
1800	565	565	79/99	33/53	6	3.5	13.8	Coloured	676	1343	1000W	A, A+, F, G

Watts to BTU conversion multiple is 3.41

Fairford - Horizontal

Height H (mm)	Width W (mm)	Tappings C (mm)	Distance from wall - D (mm)	Tappings from wall - A (mm)	Tube Qty	Water Content L	Weight KG	Colour	▲T30 Watts	▲T50 Watts	Element Output	Element Type
600	375	375	79/99	33/53	4	0.87	4.5	Coloured	157	308	300W	A, A+
600	565	565	79/99	33/53	6	1.3	6.7	Coloured	236	464	300W	A, A+, C, H
600	945	945	79/99	33/53	10	2.18	10.1	Coloured	395	775	600W	A, A+, C, H
600	1325	1325	79/99	33/53	14	3.06	13.9	Coloured	553	1086	900W	A, A+, C, H

Watts to BTU conversion multiple is 3.41

BURFORD - ALUMINIUM RANGE

Burford - Vertical

Height H (mm)	Width W (mm)	Tappings C (mm)	Distance from wall - D (mm)	Tappings from wall - A (mm)	Tube Qty	Water Content L	Weight KG	Colour	▲T30 Watts	▲T50 Watts	Element Output	Element Type
1800	275	275	108/128	33/53	4	2.28	10.4	Coloured	373	756	600W	A, A+, F, G
1800	345	345	108/128	33/53	5	2.85	12.9	Coloured	464	939	750W	A, A+, F, G
1800	415	415	108/128	33/53	6	3.42	15.3	Coloured	553	1122	1000W	A, A+, F, G
1800	485	485	108/128	33/53	7	3.99	17.7	Coloured	643	1302	1200W	A, A+, F, G

Watts to BTU conversion multiple is 3.41

Burford - Horizontal

Height H (mm)	Width W (mm)	Tappings C (mm)	Distance from wall - D (mm)	Tappings from wall - A (mm)	Tube Qty	Water Content L	Weight KG	Colour	▲T30 Watts	▲T50 Watts	Element Output	Element Type
600	485	485	108/128	33/53	7	1.43	7.3	Coloured	246	478	300W	A, A+, C, H
600	625	625	108/128	33/53	9	1.84	9.2	Coloured	313	609	450W	A, A+, C, H
600	835	835	108/128	33/53	12	2.45	12	Coloured	414	804	600W	A, A+, C, H
600	1045	1045	108/128	33/53	15	3.07	14.8	Coloured	513	997	750W	A, A+, C, H
600	1185	1185	108/128	33/53	17	3.47	16.7	Coloured	579	1125	900W	A, A+, C, H

Watts to BTU conversion multiple is 3.41

Fairford Vertical

Fairford Horizontal

Burford Vertical

Kelmscott Vertical

Technical Tables & Drawings

FAIRFORD - VERTICAL

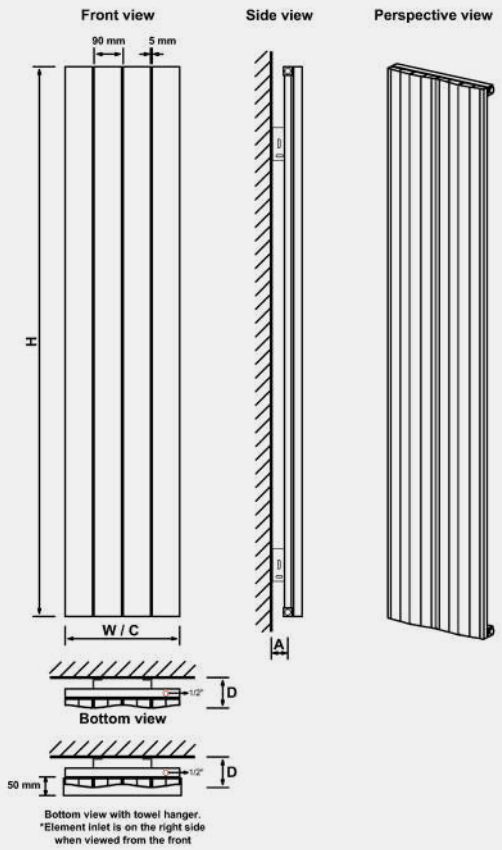

FAIRFORD - HORIZONTAL

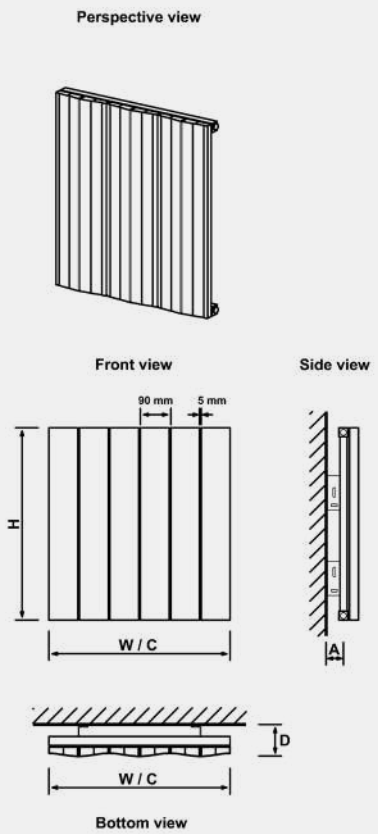

BURFORD - VERTICAL

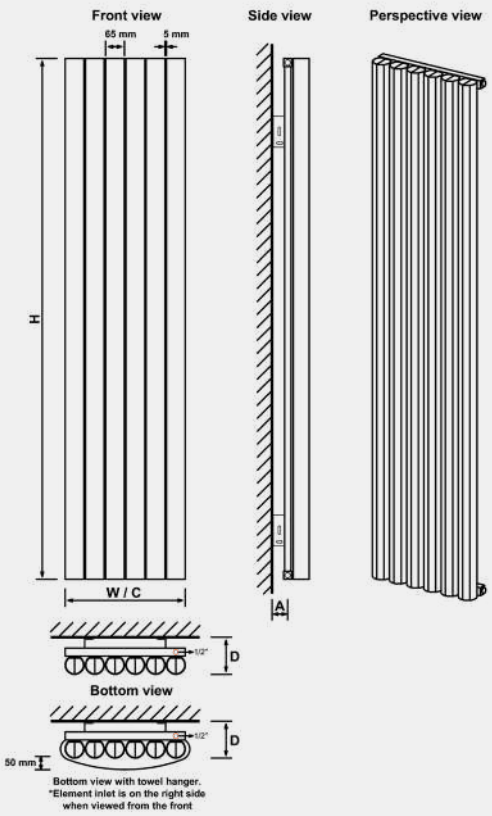

BURFORD - HORIZONTAL

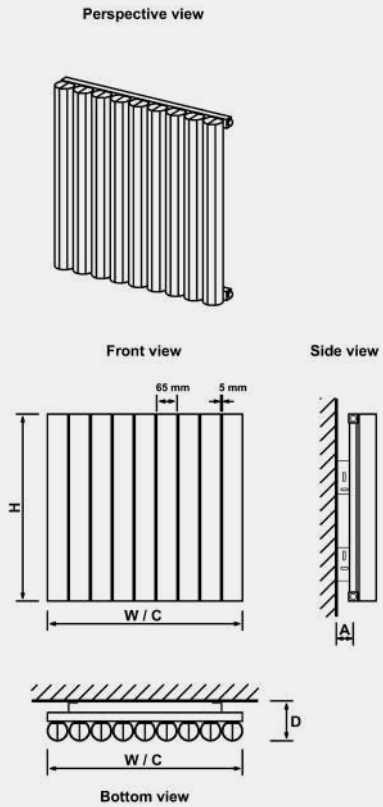

Technical Tables & Drawings

KELMSCOTT - ALUMINIUM RANGE

Kelmscott - Vertical

Height H (mm)	Width W (mm)	Tappings C (mm)	Distance from wall - D (mm)	Tappings from wall - A (mm)	Tube Qty	Water Content L	Weight KG	Colour	▲T30 Watts	▲T50 Watts	Element Output	Element Type
1800	275	275	83/103	33/53	4	2.28	8.2	Coloured	360	740	600W	A, A+, F, G
1800	345	345	83/103	33/53	5	2.85	10.1	Coloured	450	924	750W	A, A+, F, G
1800	415	415	83/103	33/53	6	3.42	12	Coloured	538	1107	1000W	A, A+, F, G
1800	485	485	83/103	33/53	7	3.99	13.8	Coloured	627	1289	1200W	A, A+, F, G

Watts to BTU conversion multiple is 3.41

Kelmscott - Horizontal

Height H (mm)	Width W (mm)	Tappings C (mm)	Distance from wall - D (mm)	Tappings from wall - A (mm)	Tube Qty	Water Content L	Weight KG	Colour	▲T30 Watts	▲T50 Watts	Element Output	Element Type
600	485	485	83/103	33/53	7	1.43	6	Coloured	245	476	300W	A, A+, C, H
600	625	625	83/103	33/53	9	1.84	7.5	Coloured	314	610	450W	A, A+, C, H
600	835	835	83/103	33/53	12	2.45	9.8	Coloured	417	809	600W	A, A+, C, H
600	1045	1045	83/103	33/53	15	3.07	12	Coloured	519	1008	750W	A, A+, C, H
600	1185	1185	83/103	33/53	17	3.47	13.5	Coloured	587	1140	900W	A, A+, C, H

Watts to BTU conversion multiple is 3.41

WITNEY - ALUMINIUM RANGE

Witney - Vertical

Height H (mm)	Width W (mm)	Tappings C (mm)	Distance from wall - D (mm)	Tappings from wall - A (mm)	Tube Qty	Water Content L	Weight KG	Colour	▲T30 Watts	▲T50 Watts	Element Output	Element Type
1800	280	280	136	53	6	3.34	14.4	Coloured	503	985	750W	A, A+, F, G
1800	375	375	136	53	8	4.46	18.9	Coloured	662	1297	1000W	A, A+, F, G
1800	470	470	136	53	10	5.57	23.4	Coloured	819	1604	1200W	A, A+, F, G

Watts to BTU conversion multiple is 3.41

Witney - Horizontal

Height H (mm)	Width W (mm)	Tappings C (mm)	Distance from wall - D (mm)	Tappings from wall - A (mm)	Tube Qty	Water Content L	Weight KG	Colour	▲T30 Watts	▲T50 Watts	Element Output	Element Type
600	470	470	136	53	10	1.9	7.5	Coloured	328	646	300W	A, A+, C, H
600	660	660	136	53	14	2.7	10.5	Coloured	451	889	600W	A, A+, C, H
600	850	850	136	53	18	3.5	13.5	Coloured	573	1128	900W	A, A+, C, H
600	1040	1040	136	53	22	4.2	16.6	Coloured	692	1364	1000W	A, A+, C, H
600	1230	1230	136	53	26	5	19.6	Coloured	811	1597	1200W	A, A+, C, H

Watts to BTU conversion multiple is 3.41

Kelmscott Vertical

Kelmscott Horizontal

Witney Vertical

Witney Horizontal

Technical Tables & Drawings

KELMSCOTT - VERTICAL

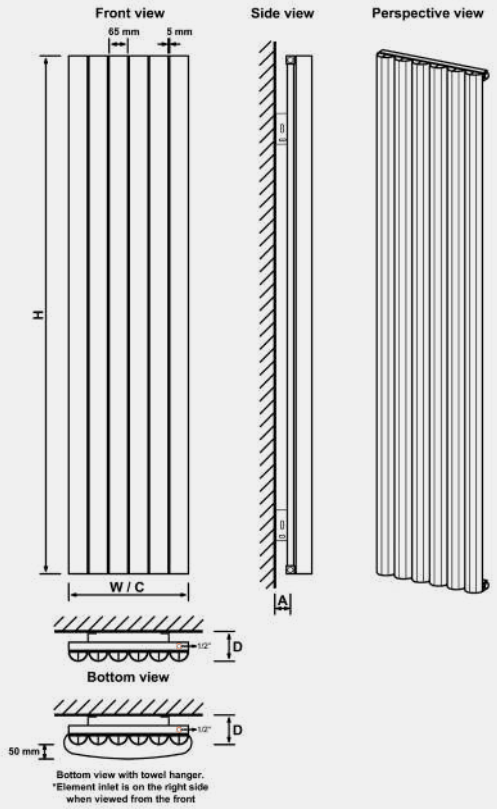

KELMSCOTT - HORIZONTAL

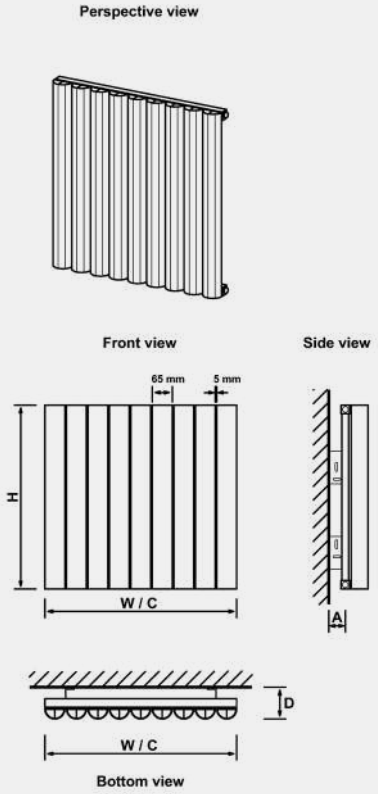

WITNEY - VERTICAL

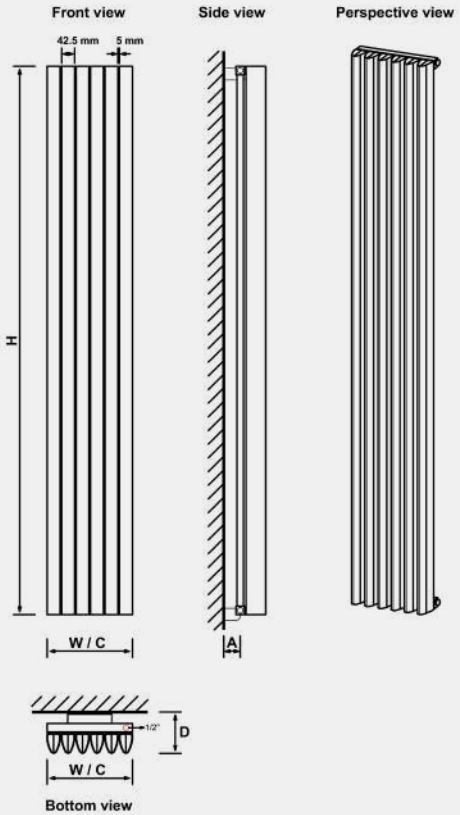

WITNEY - HORIZONTAL

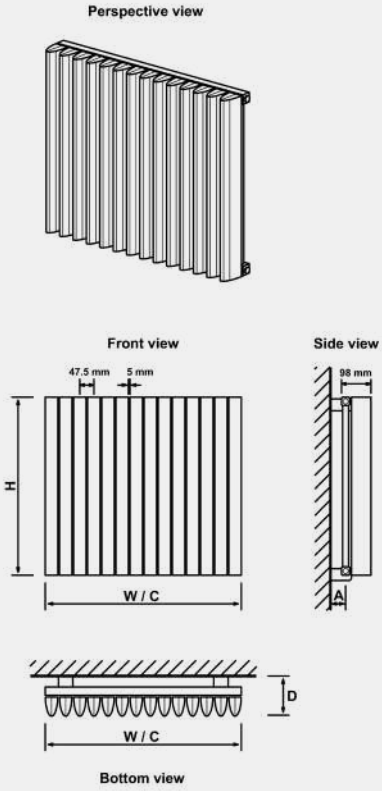

Technical Tables & Drawings

WINDRUSH - TRADITIONAL RANGE

Windrush

Height H (mm)	Width W (mm)	Tappings C (mm)	Distance from wall - D (mm)	Tappings from wall - A (mm)	Tube Qty	Water Content L	Weight KG	Colour	▲T30 Watts	▲T50 Watts	Element Output	Element Type
950	500	356	142	105	-	2.1	5.7	Chrome	74	137	100W	A, A+
950	600	470	142	105	-	2.27	6.4	Chrome	75	139	100W	A, A+
1195	500	370	130	105	-	2.7	7.4	Chrome	93	176	150W	A, A+, E
1195	600	470	130	105	-	3	7.8	Chrome	101	189	150W	A, A+, E
1550	500	370	130	105	-	3.5	8.7	Chrome	117	223	150W	A, A+, E
1550	600	470	130	105	-	3.8	9.25	Chrome	126	237	150W	A, A+, E

Watts to BTU conversion multiple is 3.41

STOUR - TRADITIONAL RANGE

Stour

Height H (mm)	Width W (mm)	Tappings C (mm)	Distance from wall - D (mm)	Tappings from wall - A (mm)	Tube Qty	Water Content L	Weight KG	Colour	▲T30 Watts	▲T50 Watts	Element Output	Element Type	Colour	▲T30 Watts	▲T50 Watts	Element Output	Element Type
690	500	426	125	53	-	1.3	5.5	Coloured	104	192	150W	E	Chrome	69	129	150W	E
690	600	526	125	53	-	2.1	5.6	Coloured	116	216	100W	A, A+, E	Chrome	79	149	100W	A, A+, E
1195	500	426	130	53	-	3.3	8.1	Coloured	166	310	150W	A, A+, E	Chrome	106	201	150W	A, A+, E
1195	600	526	130	53	-	3.7	8.47	Coloured	183	343	150W	A, A+, E	Chrome	118	223	150W	A, A+, E
1550	500	426	130	53	-	3.8	9.4	Coloured	210	391	150W	A, A+, E	Chrome	131	247	150W	A, A+, E
1550	600	526	130	53	-	4.1	9.86	Coloured	229	430	150W	A, A+, E	Chrome	146	276	150W	A, A+, E

Watts to BTU conversion multiple is 3.41

Stour

Height H (mm)	Width W (mm)	Tappings C (mm)	Distance from wall - D (mm)	Tappings from wall - A (mm)	Tube Qty	Water Content L	Weight KG	Colour	▲T30 Watts	▲T50 Watts	Element Output	Element Type	Colour	▲T30 Watts	▲T50 Watts	Element Output	Element Type
690	500	426	125	53	-	1.3	5.5	PVD Finish	97	183	150W	E	-	-	-	-	-
690	600	526	125	53	-	2.1	5.6	PVD Finish	105	197	100W	A, A+, E	-	-	-	-	-
1195	500	426	130	53	-	3.3	8.1	PVD Finish	153	288	150W	A, A+, E	-	-	-	-	-
1195	600	526	130	53	-	3.7	8.47	PVD Finish	170	319	150W	A, A+, E	-	-	-	-	-
1550	500	426	130	53	-	3.8	9.4	PVD Finish	184	347	150W	A, A+, E	-	-	-	-	-
1550	600	526	130	53	-	4.1	9.86	PVD Finish	213	401	150W	A, A+, E	-	-	-	-	-

Watts to BTU conversion multiple is 3.41

THAMES - TRADITIONAL RANGE

Thames

Height H (mm)	Width W (mm)	Tappings C (mm)	Distance from Wall - D (mm)	Tappings from wall - A (mm)	Tube Qty	Water Content L	Weight KG	Colour	▲T30 Watts	▲T50 Watts	Element Output	Element Type
1444	630	500	187	150	-	8.7	21.3	Chrome	345	654	450W	A, A+, C, H

Watts to BTU conversion multiple is 3.41

LEADON - TRADITIONAL RANGE

Leadon

Height H (mm)	Width W (mm)	Tappings C (mm)	Distance from Wall - D (mm)	Tappings from wall - A (mm)	Tube Qty	Water Content L	Weight KG	Colour	▲T30 Watts	▲T50 Watts	Element Output	Element Type
940	700	570	260	137	-	9	20.2	Chrome	322	602	450W	A, A+, C, H

Watts to BTU conversion multiple is 3.41

Windrush

Stour

Thames

Leadon

Technical Tables & Drawings

WINDRUSH

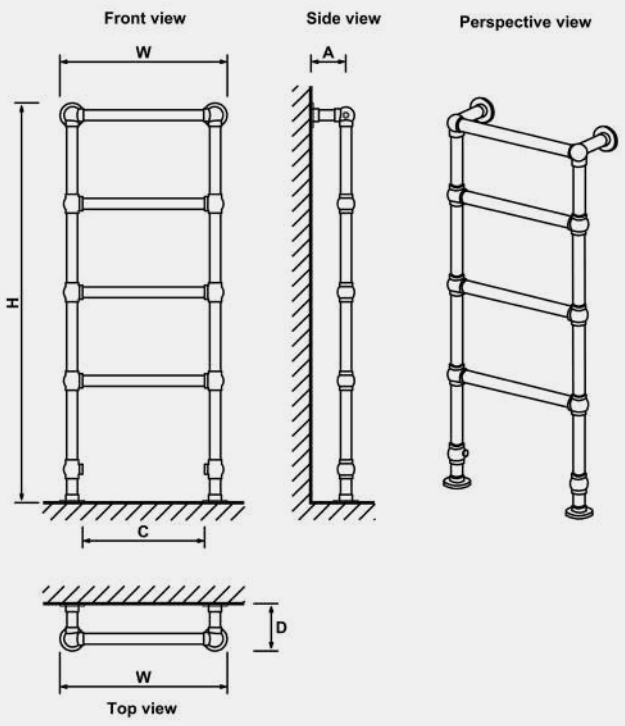

STOUR

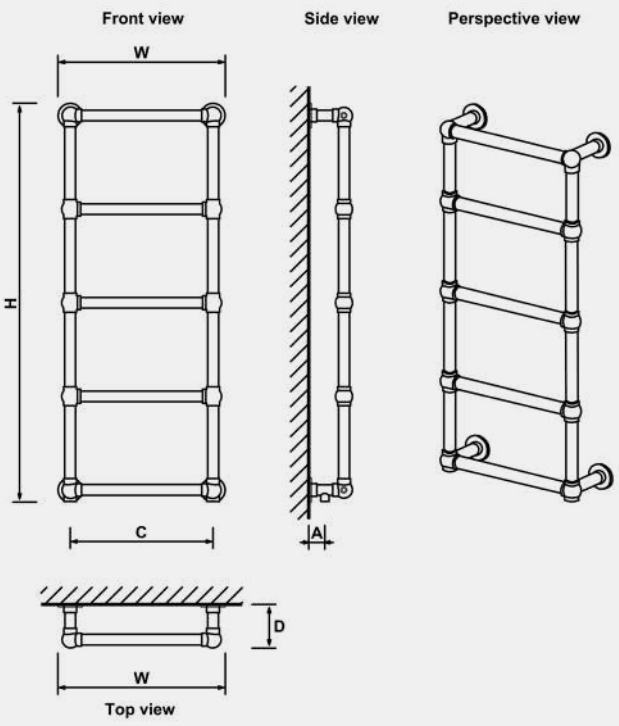

THAMES

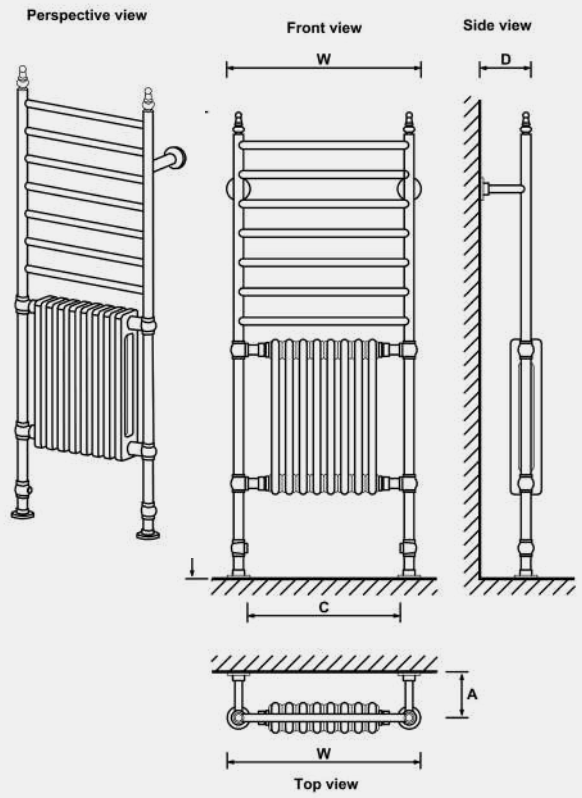

LEADON

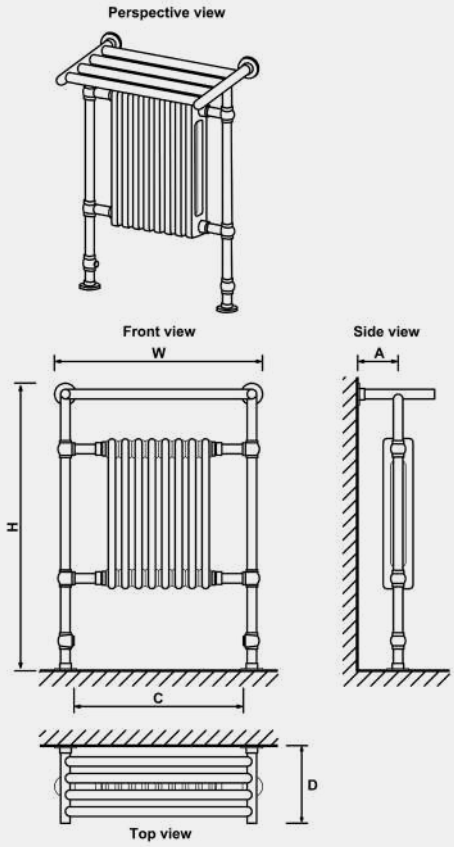

Technical Tables & Drawings

COLN - TRADITIONAL RANGE

Coln

Height H (mm)	Width W (mm)	Tappings C (mm)	Distance from Wall - D (mm)	Tappings from wall - A (mm)	Tube Qty	Water Content L	Weight KG	Colour	▲T30 Watts	▲T50 Watts	Element Output	Element Type
510	680	676	260	50	-	5.82	16.3	Chrome	247	468	300W	A, A+, C, H

*On dual fuel installation, please use only Type A or Type A+ element

Watts to BTU conversion multiple is 3.41

TWYVER - TRADITIONAL RANGE

Twyver

Height H (mm)	Width W (mm)	Tappings C (mm)	Distance from Wall - D (mm)	Tappings from wall - A (mm)	Tube Qty	Water Content L	Weight KG	Colour	▲T30 Watts	▲T50 Watts	Element Output	Element Type
952	684	547	158	108	-	3.3	14.6	Chrome	334	644	N/A	N/A

Watts to BTU conversion multiple is 3.41

AVON - TRADITIONAL RANGE

Avon

Height H (mm)	Width W (mm)	Tappings C (mm)	Distance from Wall - D (mm)	Tappings from wall - A (mm)	Tube Qty	Water Content L	Weight KG	Colour	▲T30 Watts	▲T50 Watts	Element Output	Element Type
960	429	300	160	110	-	4.30	15.50	Chrome / Coloured	159	302	150W	A, A+, C, H
960	500	370	185	135	-	5.50	15.70	Chrome / Coloured	199	377	300W	A, A+, C, H

Watts to BTU conversion multiple is 3.41

Avon

Height H (mm)	Width W (mm)	Tappings C (mm)	Distance from Wall - D (mm)	Tappings from wall - A (mm)	Tube Qty	Water Content L	Weight KG	Colour	▲T30 Watts	▲T50 Watts	Element Output	Element Type
960	429	300	160	110	-	4.30	15.50	PVD Finish / Coloured	182	342	150W	A, A+, C, H
960	500	370	185	135	-	5.50	15.70	PVD Finish / Coloured	227	428	300W	A, A+, C, H

* PVD finish is Brushed Brass.

Watts to BTU conversion multiple is 3.41

Coln

Twyver

Avon

Avon

Technical Tables & Drawings

COLN

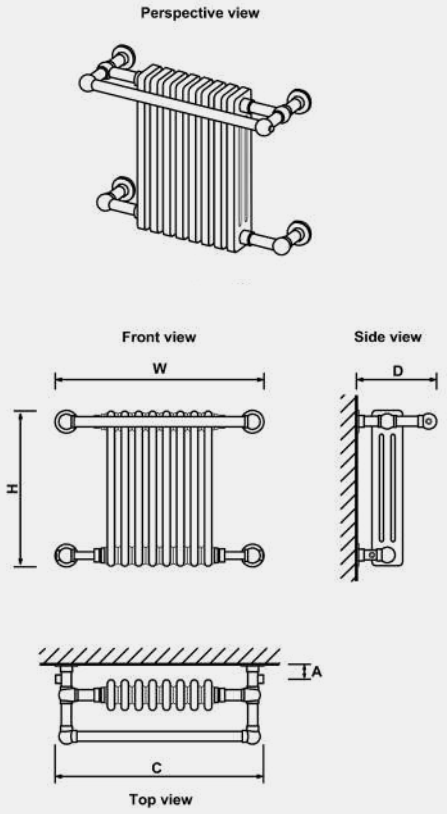

TWYVER

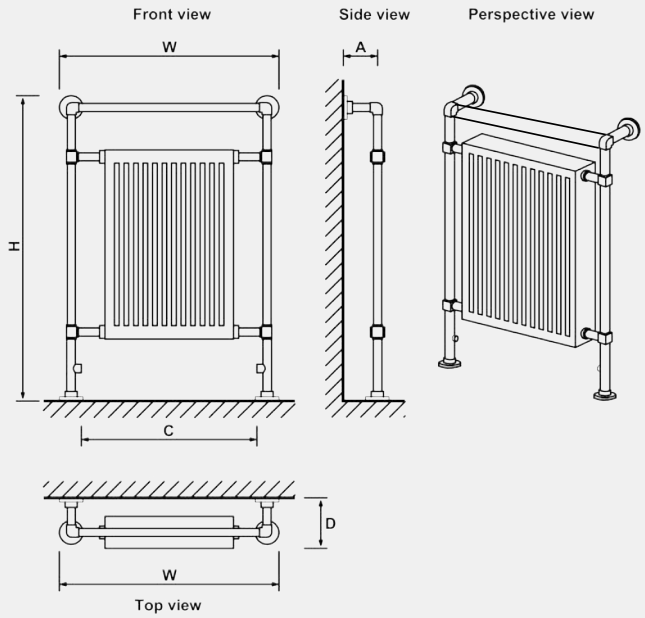

AVON

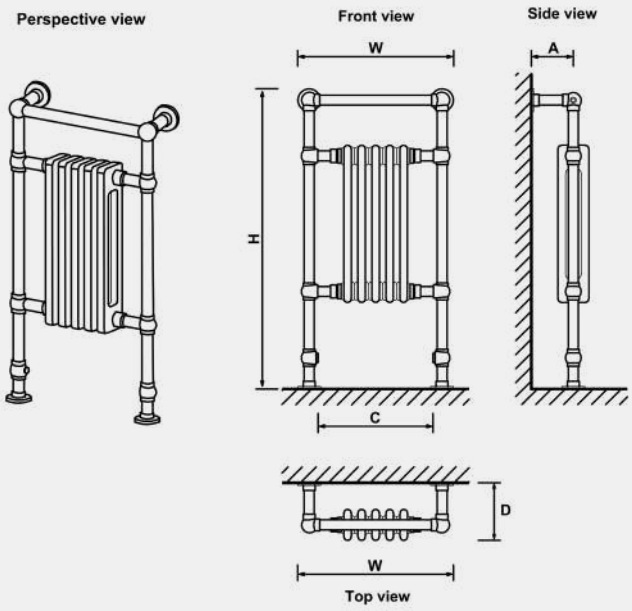

Technical Tables & Drawings

ISBOURNE - TRADITIONAL RANGE

Isbourne

Height H (mm)	Width W (mm)	Tappings C (mm)	Distance from Wall - D (mm)	Tappings from wall - A (mm)	Tube Qty	Water Content L	Weight KG	Colour	▲T30 Watts	▲T50 Watts	Element Output	Element Type
940	507	377	260	121	-	5.65	14.03	Chrome / Coloured	207*	392*	300W	A, A+, C, H
940	600	467	260	121	-	6.62	16.70	Chrome / Coloured	274	521	450W	A, A+, C, H

* Further heat output information available on eastbrooktrade.com **E&OA**

Watts to BTU conversion multiple is 3.41

Isbourne

Height H (mm)	Width W (mm)	Tappings C (mm)	Distance from Wall - D (mm)	Tappings from wall - A (mm)	Tube Qty	Water Content L	Weight KG	Colour	▲T30 Watts	▲T50 Watts	Element Output	Element Type
940	507	377	260	121	-	5.65	14.03	PVD Finish / Coloured	207	392	300W	A, A+, C, H
940	600	467	260	121	-	6.62	16.70	PVD Finish / Coloured	275	522	450W	A, A+, C, H

* PVD Finish is Brushed Brass.

Watts to BTU conversion multiple is 3.41

IMPERIA 2 COLUMN - TRADITIONAL RANGE

Imperia 2 Column - Vertical / Horizontal - Painted Finish

Height H (mm)	Width W (mm)	Tappings C (mm)	Distance from Wall - D (mm)	Tappings from wall - A (mm)	Tube Qty	Water Content L	Weight KG	Colour	▲T30 Watts	▲T50 Watts	Element Output	Element Type
300	830	830	92	58	18	7.68	9.58	Coloured	234	432	300W	A, A+, C, H
300	1010	1010	92	58	22	9.39	13.15	Coloured	286	528	450W	A, A+, C, H
300	1145	1145	92	58	25	10.53	14.95	Coloured	325	600	450W	A, A+, C, E*, H
300	1370	1370	92	58	30	12.6	16.25	Coloured	390	720	450W	A, A+, C, E*, H
300	1460	1460	92	58	32	13.66	16.72	Coloured	416	768	600W	A, A+, C, E*, H
300	1640	1640	92	58	36	15.37	18.76	Coloured	468	864	750W	A, A+, C, E*, H
450	605	605	92	58	13	7.03	9.76	Coloured	247	468	300W	A, A+, C, H
450	830	830	92	58	18	9.74	13.36	Coloured	342	648	450W	A, A+, C, E*, H
450	1010	1010	92	58	22	11.9	16.24	Coloured	418	792	600W	A, A+, C, E, H
450	1145	1145	92	58	25	13.53	18.4	Coloured	475	900	750W	A, A+, C, E, H
450	1460	1460	92	58	32	17.32	23.44	Coloured	608	1152	900W	A, A+, C, E, H
600	425	425	92	58	9	5.74	11.57	Coloured	225	423	300W	A, A+, C, H
600	470	470	92	58	10	6.38	12.72	Coloured	250	470	300W	A, A+, C, H
600	515	515	92	58	11	7.01	13.93	Coloured	275	517	300W	A, A+, C, H
600	560	560	92	58	12	7.65	15.09	Coloured	300	564	300W	A, A+, C, H
600	605	605	92	58	13	7.6	16.7	Coloured	325	611	450W	A, A+, C, H
600	830	830	92	58	18	10.6	20.49	Coloured	450	846	600W	A, A+, C, E*, H
600	1010	1010	92	58	22	14.03	26.68	Coloured	550	1034	750W	A, A+, C, H
600	1145	1145	92	58	25	14.9	28.1	Coloured	625	1175	900W	A, A+, H
600	1460	1460	92	58	32	20.41	32.46	Coloured	800	1504	1000W	A+
600	1640	1640	92	58	36	23.6	36.4	Coloured	900	1692	1200W	A, A+, H
600	1820	1820	92	58	40	26.22	37.6	Coloured	1000	1880	1200W	A, A+, H
1800	290	290	92	58	6	9.03	22.27	Coloured	414	804	N/A	N/A
1800	380	380	92	58	8	11.6	26.31	Coloured	552	1072	N/A	N/A
1800	470	470	92	58	10	14.6	27	Coloured	690	1340	N/A	N/A
1800	515	515	92	58	11	17.27	30.95	Coloured	759	1474	N/A	N/A
1800	560	560	92	58	12	18.84	31.72	Coloured	828	1608	N/A	N/A
1800	605	605	92	58	13	20.41	34.33	Coloured	897	1742	N/A	N/A
1800	650	650	92	58	14	21.98	36.94	Coloured	966	1876	N/A	N/A

* 600W Type E Element can be fitted

Watts to BTU conversion multiple is 3.41

Imperia 2 Column - Vertical / Horizontal - Bare Metal Finish

Height H (mm)	Width W (mm)	Tappings C (mm)	Distance from Wall - D (mm)	Tappings from wall - A (mm)	Tube Qty	Water Content L	Weight KG	Colour	▲T30 Watts*	▲T50 Watts*	Element Output	Element Type
600	605	605	92	58	13	7.6	16.7	Bare Metal**	325	611	450W	A, A+, C, H
600	830	830	92	58	18	10.6	20.49	Bare Metal**	450	846	600W	A, A+, C, E*, H
600	1010	1010	92	58	22	14.03	26.68	Bare Metal**	550	1034	750W	A, A+, C, H
600	1145	1145	92	58	25	14.9	28.1	Bare Metal**	625	1175	900W	A, A+, H
600	1460	1460	92	58	32	20.41	32.46	Bare Metal**	800	1504	1000W	A+
1800	380	380	92	58	8	11.6	26.31	Bare Metal**	552	1072	N/A	N/A
1800	470	470	92	58	10	14.6	27	Bare Metal**	690	1340	N/A	N/A
1800	560	560	92	58	12	18.84	31.72	Bare Metal**	828	1608	N/A	N/A

* 600W Type E Element can be fitted

** Further heat output information available on eastbrooktrade.com **E&OA**

Watts to BTU conversion multiple is 3.41

Technical Tables & Drawings

ISBOURNE

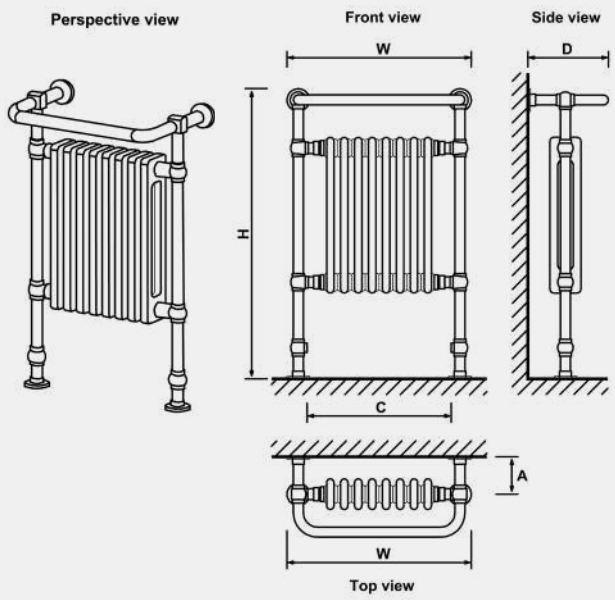

IMPERIA 2 COLUMN - VERTICAL

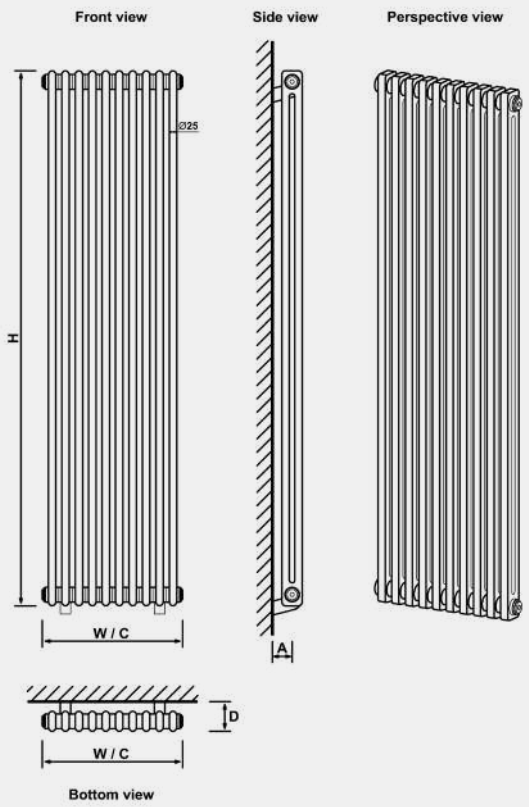

IMPERIA 2 COLUMN - HORIZONTAL

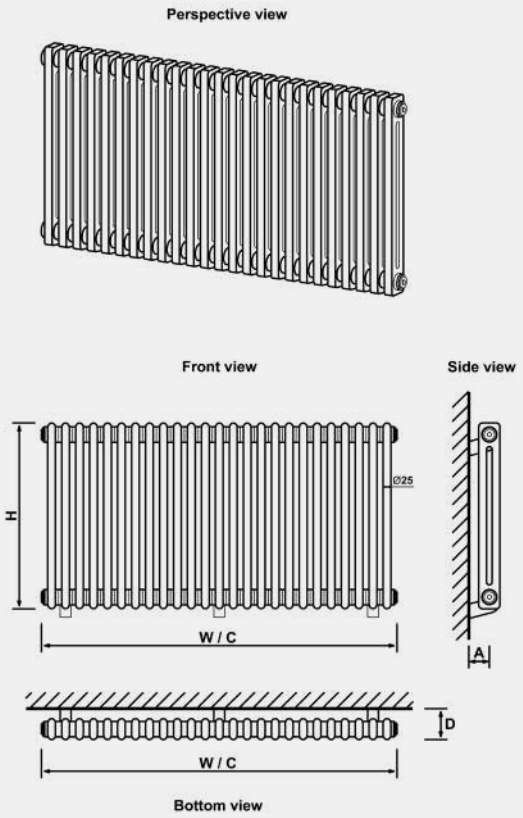

Technical Tables & Drawings

IMPERIA 3 COLUMN - TRADITIONAL RANGE

Imperia 3 Column - Vertical / Horizontal - Painted Finish

Height H (mm)	Width W (mm)	Tappings C (mm)	Distance from Wall - D (mm)	Tappings from wall - A (mm)	Tube Qty	Water Content L	Weight KG	Colour	▲T30 Watts	▲T50 Watts	Element Output	Element Type
300	830	830	122	72	18	10.73	13.27	Coloured	293	562	450W	A, A+, C, E*, H
300	1010	1010	122	72	22	13.12	18.15	Coloured	358	708	600W	A, A+, C, E*, H
300	1145	1145	122	72	25	11.88	20.65	Coloured	407	830	600W	A, A+, C, E*, H
300	1370	1370	122	72	30	14.21	24.6	Coloured	488	1026	750W	A, A+, C, E*, H
300	1460	1460	122	72	32	19.08	25.9	Coloured	520	1126	750W	A, A+, C, E*, H
300	1640	1640	122	72	36	21.47	26.13	Coloured	585	1303	900W	A, A+, C, E*, H
450	605	605	122	72	13	9.98	13.79	Coloured	299	585	450W	A, A+
450	830	830	122	72	18	13.82	18.94	Coloured	414	810	600W	A, A+, C, H
450	1010	1010	122	72	22	16.89	23.06	Coloured	506	990	750W	A, A+, C, H
450	1145	1145	122	72	25	19.19	26.15	Coloured	575	1125	900W	A, A+, C, H
450	1460	1460	122	72	32	24.57	33.36	Coloured	736	1440	1200W	A+, H
600	425	425	122	72	9	7.2	16.31	Coloured	270	522	450W	A, A+
600	470	470	122	72	10	8	17.99	Coloured	300	580	450W	A, A+, C, H
600	515	515	122	72	11	8.8	19.71	Coloured	330	638	450W	A, A+, C, H
600	560	560	122	72	12	9.6	21.39	Coloured	360	696	600W	A+, C, H
600	605	605	122	72	13	11	21.63	Coloured	390	754	600W	A, A+, C, H
600	830	830	122	72	18	15.3	26.85	Coloured	540	1044	900W	A+, C, H
600	1010	1010	122	72	22	17.6	32.35	Coloured	660	1276	1000W	A, A+, C, H
600	1145	1145	122	72	25	21.3	36.9	Coloured	750	1450	1200W	A, A+, H
600	1460	1460	122	72	32	25.61	47.05	Coloured	960	1856	1200W	A+, H
600	1640	1640	122	72	36	33.81	53.4	Coloured	1080	2088	1200W	A+, H
600	1820	1820	122	72	40	37.57	54.2	Coloured	1200	2320	1200W	A+, H
1800	290	290	122	72	6	12.6	32.06	Coloured	500	994	N/A	N/A
1800	380	380	122	72	8	17.4	38.77	Coloured	667	1326	N/A	N/A
1800	470	470	122	72	10	21.9	39.2	Coloured	834	1657	N/A	N/A
1800	515	515	122	72	11	25.42	44.8	Coloured	917	1823	N/A	N/A
1800	560	560	122	72	12	27.73	46.78	Coloured	1001	1988	N/A	N/A
1800	605	605	122	72	13	30.04	50.645	Coloured	1084	2154	N/A	N/A
1800	650	650	122	72	14	32.35	54.51	Coloured	1168	2320	N/A	N/A

* 600W Type E Element can be fitted

Watts to BTU conversion multiple is 3.41

Imperia 3 Column - Vertical / Horizontal - Bare Metal Finish

Height H (mm)	Width W (mm)	Tappings C (mm)	Distance from Wall - D (mm)	Tappings from wall - A (mm)	Tube Qty	Water Content L	Weight KG	Colour	▲T30 Watts*	▲T50 Watts*	Element Output	Element Type
600	605	605	122	72	13	11	21.63	Bare Metal**	390	754	600W	A, A+, C, H
600	830	830	122	72	18	15.3	26.85	Bare Metal**	540	1044	900W	A+, C, H
600	1010	1010	122	72	22	17.6	32.35	Bare Metal**	660	1276	1000W	A, A+, C, H
600	1145	1145	122	72	25	21.3	36.9	Bare Metal**	750	1450	1200W	A, A+, H
600	1460	1460	122	72	32	25.61	47.05	Bare Metal**	960	1856	1200W	A+, H
1800	380	380	122	72	8	17.4	38.77	Bare Metal**	667	1326	N/A	N/A
1800	470	470	122	72	10	21.9	39.2	Bare Metal**	834	1657	N/A	N/A
1800	560	560	122	72	12	27.73	46.78	Bare Metal**	1001	1988	N/A	N/A

* 600W Type E Element can be fitted

** Further heat output information available on eastbrooktrade.com **E&OA**

Watts to BTU conversion multiple is 3.41

IMPERIA 4 COLUMN - TRADITIONAL RANGE

Imperia 4 Column - Horizontal

Height H (mm)	Width W (mm)	Tappings C (mm)	Distance from Wall - D (mm)	Tappings from wall - A (mm)	Tube Qty	Water Content L	Weight KG	Colour	▲T30 Watts	▲T50 Watts	Element Output	Element Type
300	830	830	160	90	18	13.72	18.76	Coloured	378	781	600W	A, A+, C, E*, H
300	1010	1010	160	90	22	16.77	22.84	Coloured	462	878	750W	A, A+, C, E*, H
300	1145	1145	160	90	25	19.06	25.9	Coloured	525	998	750W	A, A+, C, E, H
300	1370	1370	160	90	30	22.87	31	Coloured	630	1197	900W	A, A+, C, E, H
300	1460	1460	160	90	32	24.39	33.04	Coloured	672	1277	1000W	A, A+, H
300	1640	1640	160	90	36	27.44	37.12	Coloured	756	1436	1200W	A, A+, H
600	425	425	160	90	9	10.97	18.6	Coloured	361	688	450W	A, A+, C, H
600	830	830	160	90	18	21.95	35.95	Coloured	722	1375	1000W	A, A+, H
600	1010	1010	160	90	22	26.83	43.1	Coloured	882	1681	1200W	A, A+
600	1145	1145	160	90	25	30.49	48.85	Coloured	1003	1910	1200W	A, A+
600	1460	1460	160	90	32	39.03	62.6	Coloured	1283	2445	N/A	N/A
600	1640	1640	160	90	36	43.9	71.7	Coloured	1444	2750	N/A	N/A

* 600W Type E Element can be fitted

Watts to BTU conversion multiple is 3.41

Technical Tables & Drawings

IMPERIA 3 COLUMN - VERTICAL

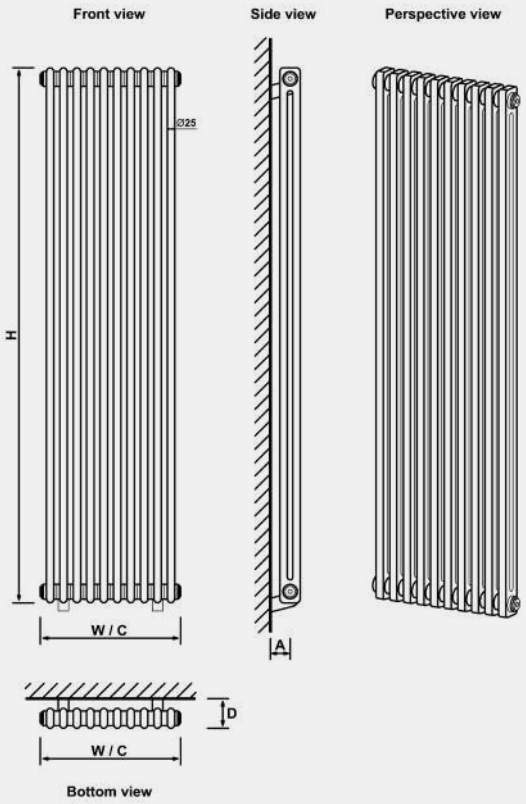

IMPERIA 3 COLUMN - HORIZONTAL

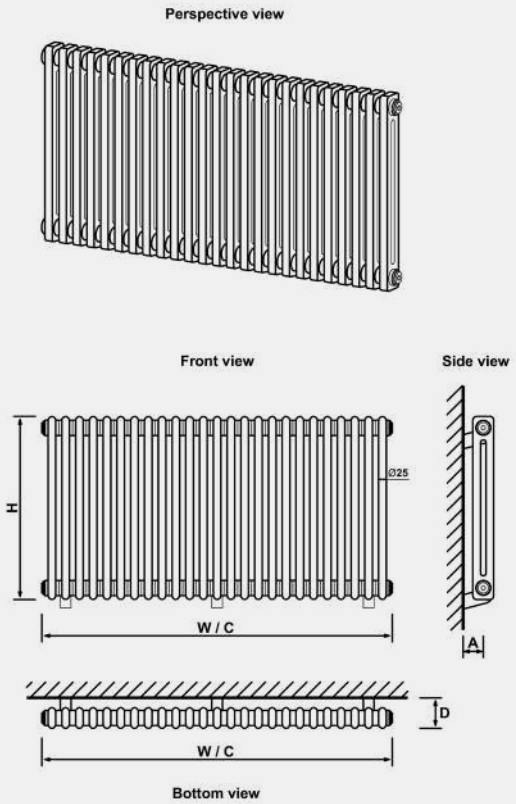

IMPERIA 4 COLUMN - HORIZONTAL

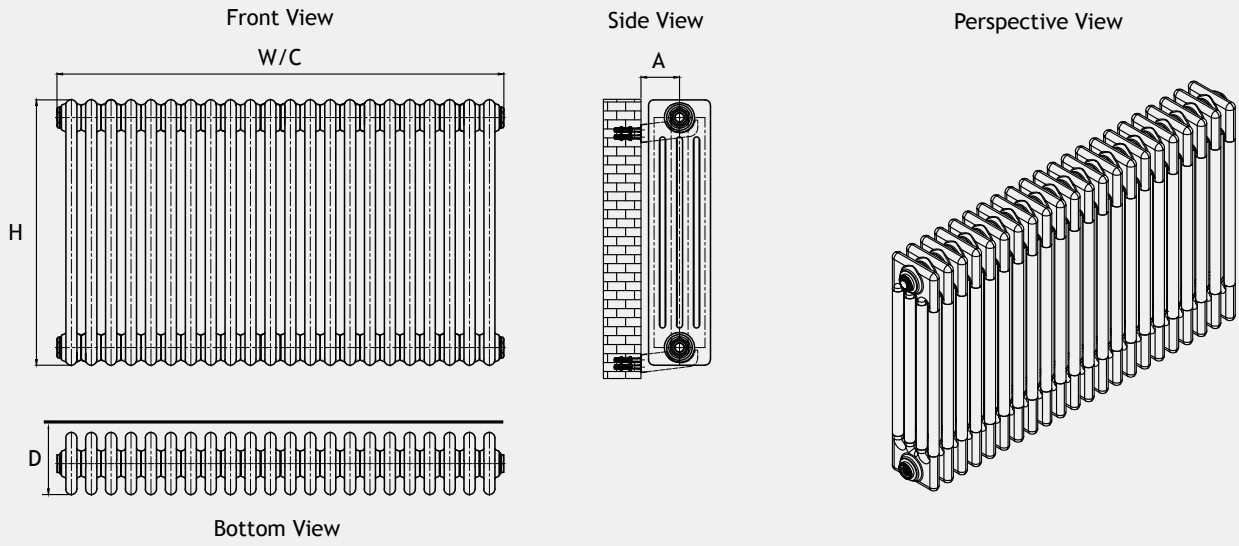

Technical Tables & Drawings

IMPERIA 6 COLUMN - TRADITIONAL RANGE

Imperia 6 Column - Horizontal

Height H (mm)	Width W (mm)	Tappings C (mm)	Distance from Wall - D (mm)	Tappings from wall - A (mm)	Tube Qty	Water Content L	Weight KG	Colour	▲T30 Watts	▲T50 Watts	Element Output	Element Type
300	830	830	243	133	18	20.79	26.14	Coloured	535	1008	900W	A, A+, C, H
300	1010	1010	243	133	22	25.41	31.86	Coloured	654	1232	1000W	A, A+, C, H
300	1145	1145	243	133	25	28.88	36.15	Coloured	743	1400	1200W	A, A+, H
300	1370	1370	243	133	30	34.66	43.3	Coloured	892	1680	1200W	A, A+, H
600	425	425	243	133	9	16.57	24.61	Coloured	478	993	600W	H
600	605	605	243	133	13	23.93	35.37	Coloured	691	1434	900W	C, H
600	830	830	243	133	18	33.14	48.82	Coloured	956	1986	1200W	A, A+, H
600	1010	1010	243	133	22	40.5	59.58	Coloured	1169	2427	1200W	A, A+, H
600	1145	1145	243	133	25	46.03	67.65	Coloured	1328	2758	N/A	N/A
600	1370	1370	243	133	30	55.23	81.1	Coloured	1594	3310	N/A	N/A
600	1460	1460	243	133	32	58.91	86.48	Coloured	1700	3530	N/A	N/A

Watts to BTU conversion multiple is 3.41

IMPERIA 6 COLUMN BENCH - TRADITIONAL RANGE

Imperia 6 Column Bench - Horizontal

Total Height H (mm)	Total Width W (mm)	Radiator Height (mm)	Radiator Width (mm)	Tappings C (mm)	Tappings from floor - A (mm)	Tube Qty	Water Content L	Weight KG	Colour	▲T30 Watts	▲T50 Watts	Element Output	Element Type
480	850	290	700	620	130	6	12.41	30.5	Coloured	335	645	N/A	N/A
480	1200	290	1050	970	130	6	17.22	42.0	Coloured	505	974	N/A	N/A

Watts to BTU conversion multiple is 3.41

IMPERIA MULTIRAIL 2 COLUMN - TRADITIONAL RANGE

Imperia Multirail 2 Column

Height H (mm)	Width W (mm)	Tappings C (mm)	Distance from Wall - D (mm)	Tappings from wall - A (mm)	Tube Qty	Water Content L	Weight KG	Colour	▲T30 Watts	▲T50 Watts	Element Output	Element Type
612	800	724	98-108	63-67	8	6.73	10.95	Coloured	259*	495*	300W	A, A+,B, D, E, F, G
612	1000	924	98-108	63-67	8	7.88	13.19	Coloured	321*	613*	300W	A, A+,B, D, E, F, G
832	500	424	98-108	63-67	13	7.82	11.53	Coloured	278	532	300W	A, A+,B, D, E, F, G
832	600	524	98-108	63-67	13	8.76	13.35	Coloured	320	613	300W	A, A+,B, D, E, F, G
1140	500	424	98-108	63-67	20	11.78	17.04	Coloured	385	737	450W	A, A+,B, D, E, F, G
1140	600	524	98-108	63-67	20	13.22	19.84	Coloured	443	849	600W	A, A+,B, D, E, F, G
1430	500	424	98-108	63-67	24	14.28	20.20	Coloured	487	937	600W	A, A+,B, D, E, F, G
1430	600	524	98-108	63-67	24	16.02	23.56	Coloured	561	1079	600W	A, A+,B, D, E, F, G

* Further heat output information available on eastbrooktrade.com **E&OA**

Watts to BTU conversion multiple is 3.41

Imperia 6 Column

Imperia 6 Column Bench

Imperia Multirail 2 Column

Technical Tables & Drawings

IMPERIA 6 COLUMN - HORIZONTAL

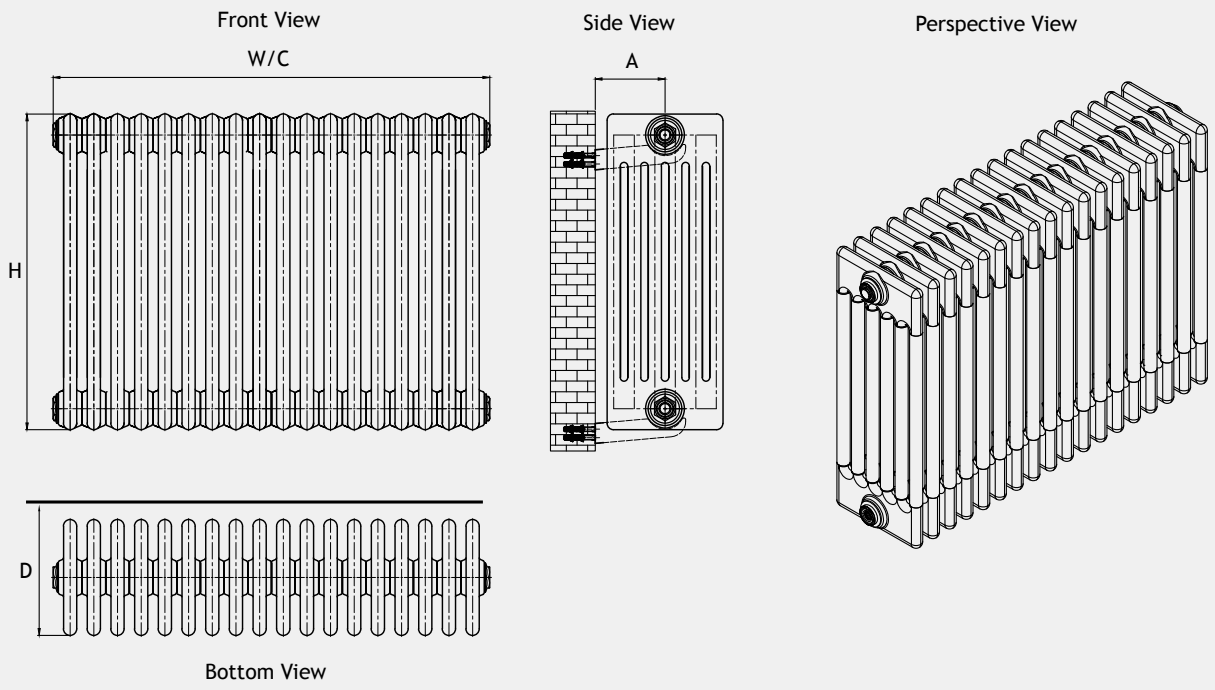

IMPERIA 6 COLUMN BENCH

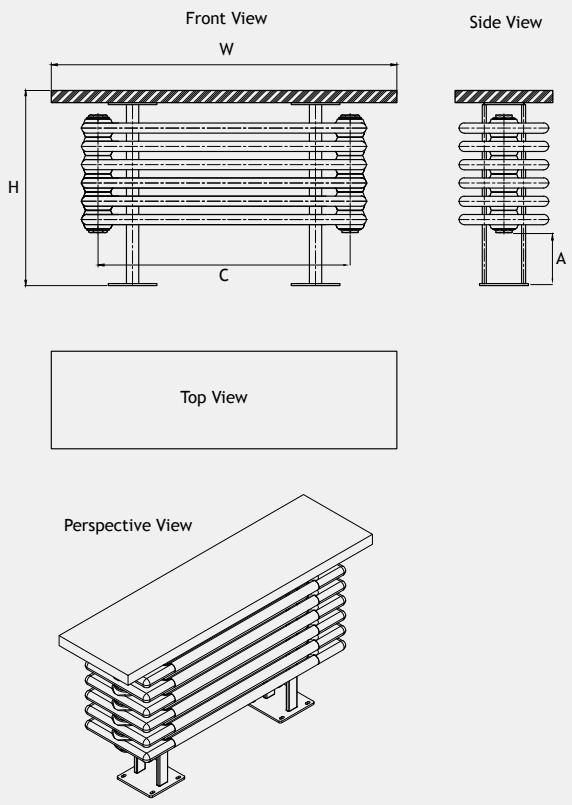

IMPERIA MULTIRAIL 2 COLUMN

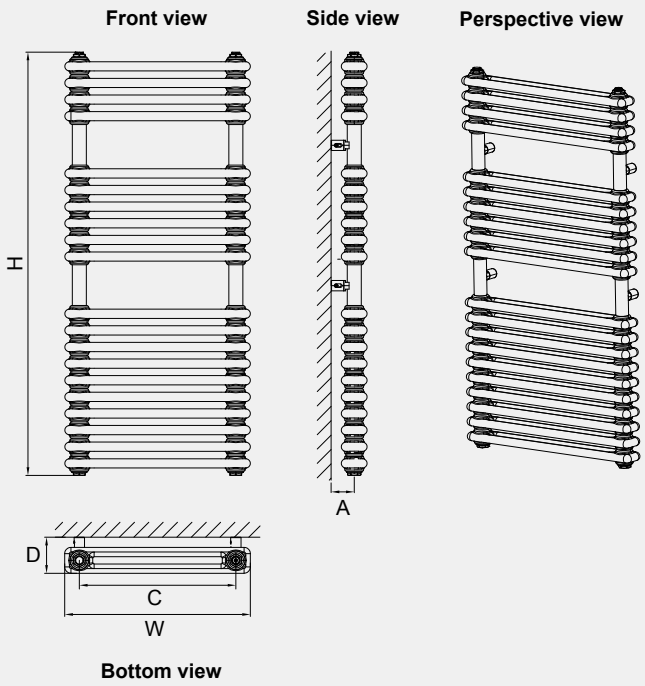

Technical Tables & Drawings

RIVASSA - TRADITIONAL RANGE

Rivassa 2 Column - Vertical / Horizontal

Height H (mm)	Width W (mm)	Tappings C (mm)	Distance from Wall - D (mm)	Tappings from wall - A (mm)	Tube Qty	Water Content L	Weight KG	Colour	▲T30 Watts	▲T50 Watts	Element Output	Element Type
300	1148	1148	93	58	25	9.25	17.5	Coloured	322	619	450W	A,A+,C,E*,H
300	1373	1373	93	58	30	11.1	20.8	Coloured	386	743	600W	A,A+,C,E*,H
600	428	428	93	58	9	5.4	10.5	Coloured	218	420	300W	A,A+,C,H
600	473	473	93	58	10	6	11.7	Coloured	242	467	300W	A,A+,C,H
600	518	518	93	58	11	6.6	12.8	Coloured	266	514	300W	A,A+,C,H
600	563	563	93	58	12	7.2	14	Coloured	290	560	450W	A,A+,C,H
600	608	608	93	58	13	7.8	18.2	Coloured	314	607	450W	A,A+,C,H
600	833	833	93	58	18	10.8	23.9	Coloured	435	841	600W	A,A+,C,E*,H
600	1010	1010	93	58	22	13.2	28.5	Coloured	532	1027	750W	A,A+,C,H
600	1148	1148	93	58	25	15.1	31.8	Coloured	605	1168	900W	A,A+,H
600	1460	1460	93	58	32	19.2	39.7	Coloured	774	1494	1200W	A,A+,H
1800	293	293	93	58	6	8.9	22.9	Coloured	421	826	N/A	N/A
1800	383	383	93	58	8	11.8	29.7	Coloured	561	1101	N/A	N/A
1800	473	473	93	58	10	14.8	36.9	Coloured	702	1377	N/A	N/A

*600w Type E Element can be fitted

Watts to BTU conversion multiple is 3.41

Rivassa 3 Column - Vertical / Horizontal

Height H (mm)	Width W (mm)	Tappings C (mm)	Distance from Wall - D (mm)	Tappings from wall - A (mm)	Tube Qty	Water Content L	Weight KG	Colour	▲T30 Watts	▲T50 Watts	Element Output	Element Type
300	1148	1148	122	72	25	14.1	25.2	Coloured	404	785	600W	A,A+,C,E*,H
300	1373	1373	122	72	30	16.8	30.2	Coloured	484	942	750W	A,A+,C,E*,H
600	428	428	122	72	9	7.7	15.2	Coloured	279	543	450W	A,A+,C,H
600	473	473	122	72	10	8.6	16.8	Coloured	310	604	450W	A,A+,C,H
600	518	518	122	72	11	9.5	18.5	Coloured	341	664	450W	A,A+,C,H
600	563	563	122	72	12	10.3	20.1	Coloured	372	724	600W	A+,C,H
600	608	608	122	72	13	11.2	24.4	Coloured	403	785	600W	A+,C,H
600	833	833	122	72	18	15.5	32.8	Coloured	558	1086	900W	A+,C,H
600	1010	1010	122	72	22	18.9	40.3	Coloured	682	1328	1000W	A,A+,C,H
600	1148	1148	122	72	25	21.5	45.6	Coloured	776	1509	1200W	A,A+,H
600	1460	1460	122	72	32	27.5	58.1	Coloured	993	1931	1200W	A,A+,H
1800	293	293	122	72	6	13.2	33	Coloured	528	1030	N/A	N/A
1800	383	383	122	72	8	17.6	43.6	Coloured	705	1374	N/A	N/A
1800	473	473	122	72	10	22.1	53.9	Coloured	881	1717	N/A	N/A

*600w Type E Element can be fitted

Watts to BTU conversion multiple is 3.41

Rivassa 4 Column - Horizontal

Height H (mm)	Width W (mm)	Tappings C (mm)	Distance from Wall - D (mm)	Tappings from wall - A (mm)	Tube Qty	Water Content L	Weight KG	Colour	▲T30 Watts	▲T50 Watts	Element Output	Element Type
300	1010	1010	155	85	22	16.2	30.6	Coloured	447	876	600W	A,A+,C,E*,H
300	1373	1373	155	85	30	22.2	42.65	Coloured	610	1195	1000W	A,A+,H
300	1505	1505	155	85	33	24.4	46.1	Coloured	671	1315	1000W	A+,H
600	425	425	155	85	9	10.8	24.2	Coloured	356	697	450W	A,A+
600	605	605	155	85	13	15.6	34.2	Coloured	515	1007	750W	A+,C,H
600	785	785	155	85	17	20.4	43.5	Coloured	673	1316	900W	A+,H
600	1010	1010	155	85	22	26.4	55.5	Coloured	871	1704	1200W	A,A+
600	1190	1190	155	85	26	31.2	66.3	Coloured	1029	2013	1200W	A,A+

*600w Type E Element can be fitted

Watts to BTU conversion multiple is 3.41

Rivassa 2 Column Vertical

Rivassa 2 Column Horizontal

Rivassa 3 Column Horizontal

Rivassa 3 Column Vertical

Technical Tables & Drawings

RIVASSA 2 COLUMN - HORIZONTAL

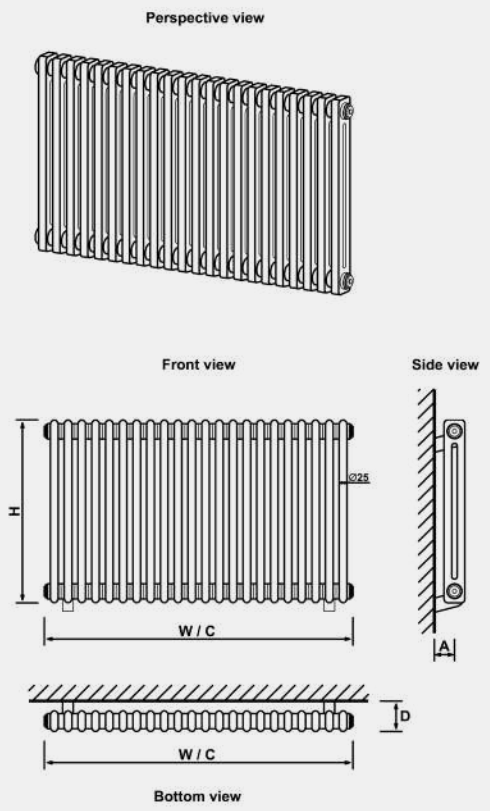

RIVASSA 3 COLUMN - HORIZONTAL

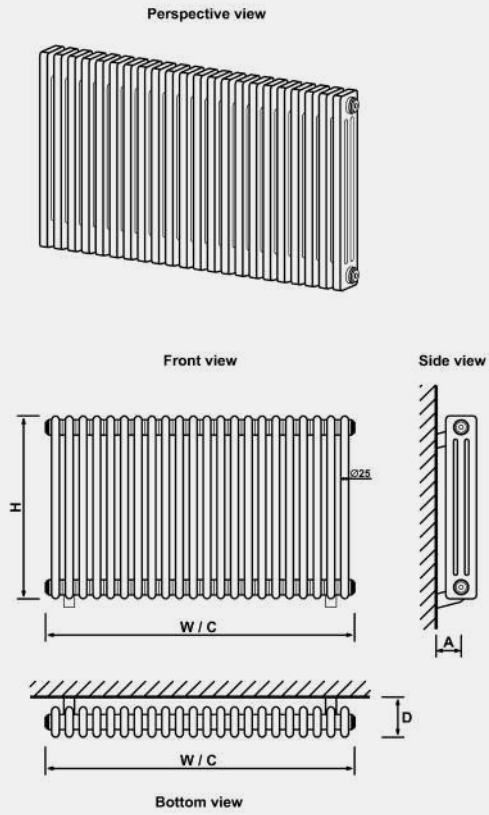

RIVASSA 4 COLUMN - HORIZONTAL

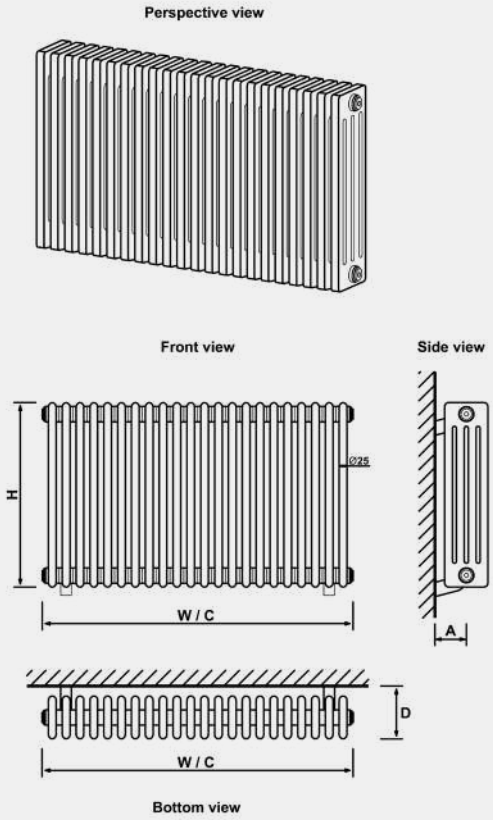

Notes

Planner

Notes

Planner

Notes

Planner

Notes

Planner

Notes

Planner

Notes

Planner

Notes

Planner

Notes

Planner

Notes

Planner

Notes

Planner

TOM TO CREATE

Index

A

Addington II Type 10
Chrome 162
Gloss White 156
Matt Anthracite 158
Matt Black 160
Addington II Type 10 Towel Rail
Chrome 174
Gloss White 172
Matt Anthracite 173
Matt Black 173
Addington II Type 20
Gloss White 166
Matt Anthracite 168
Matt Black 170
Addington II Type 20 Towel Rail 175
Aluminium Type 10 Radiator
Gloss White 220
Matt Anthracite 222
Aluminium Type 20 Radiator
Gloss White 224
Matt Anthracite 226
Avon Towel Rail 286

B

Berkeley Radiator 246
Berlini Radiator
Vertical 266
Biava Multirail Hidden Vent (HV)
Straight
Chrome 31
Gloss White 31
Matt Anthracite 32
Matt Black 33
Matt White 31
Biava Multirail Towel Rail
Curved
Chrome 49
Gloss White 49
Straight
Chrome 48
Gloss White 48
Biava Towel Rail
Dry Element 74
Round 55
Square 61
Tube on Tube 60
Brockworth All Electric 78
Burford Radiator
Horizontal 271
Vertical 270

C

Charlton Radiator
Horizontal 230
Vertical 228
Coln Towel Rail 284
Conwy Towel Rail 124
Corinium Towel Rail
Round 56
Cortona Electric Radiator
Black 71
White 70
Crafton Temperature Control Panel 337

D

Deddington Radiator
Horizontal 152
Vertical 150
Deddington Towel Rail 154
Defford Towel Rail 104
Derwent Dry Element 72

E

Eshton Towel Rail 131

F

Fairford Radiator
Horizontal 269
Vertical 268
Flat Cover Plates 190
Flat Cover Plates with Lines 191

G

Guardia Radiator
Horizontal 254
Vertical 252

H

Haddenham Multirail 67
Hadleigh Radiator
Horizontal 258
Vertical 256
Helmsley Towel Rail 114
Hurley Towel Rail 110, 112

I

Imperia Multirail
2 Column 310
Imperia Radiator
2 Column
Bare Metal 296
Gloss White 290
Matt Anthracite 292
Matt Black 294
3 Column
Gloss White 298
Matt Anthracite 300
Matt Black 302
4 Column 304
6 Column
Gloss White 306
Matt Anthracite 307
Matt Black 308
6 Column Bench 309
Isbourne Towel Rail 288

K

Kelmscott Radiator
Horizontal 273
Vertical 272
Kenilworth Towel Rail 129
Kennet Dry Element 79
Keynsham Type 22 Panel Radiator with Flat Cover
Gloss White 188
Matt Anthracite 188
Matt Black 188
Keynsham Type 22 Panel Radiator with Lined Cover
Gloss White 189
Matt Anthracite 189
Matt Black 189
Kingswood Slimline Radiator
Horizontal 209
Vertical 208
Kingswood Slimline Towel Rail 210

L

Launton Multirail 66
Leadon Towel Rail 283
Leonardo Towel Rail
Brushed Brass 101
Chrome 100
Loddon Dry Element 76
Longbridge Compact Panel Type 22
Gloss White 178
Longden Compact Panel
Type 11
Gloss White 180
Matt Anthracite 184
Matt Black 185
Type 21
Gloss White 181
Matt Anthracite 184
Matt Black 185
Type 22
Gloss White 182–183
Matt Anthracite 184
Matt Black 185
Loxley Towel Rail 130

M

Malmesbury Radiator
Horizontal 244
Vertical 240
Vertical Premium 242
Marlow E-Style Towel Rail 122
Marlow Towel Rail 120
Mersey Radiator
Vertical 216
Murano Radiator
Horizontal 127
Vertical 126

P

Peretti Radiator
Horizontal 204
Vertical 202
Pipe Shrouds & Collar Kits 354
Platani Towel Rail 116
Portchester Towel Rail 125
Preston Radiator
Vertical 264

Q

Queenswood Radiator
Horizontal 214
Vertical 212

R

Reinbach Towel Rail 118
Rion Multirail 52
Rivassa Radiator
2 Column 312, 314
3 Column 316, 318
4 Column 320
Rizano Towel Rail 88
Rosano Radiator
Horizontal 198
Vertical 196
Rowsham Radiator
Horizontal 136
Vertical 134
Rowsham Towel Rail 137
Rubano Radiator
Horizontal 133
Vertical 132
Ryton Towel Rail 128

S

Santero Towel Rail 108
Staverton Towel Rail 106
Tube on Tube
Curved 103
Straight 102
Stour Towel Rail 279-281

T

Thames Towel Rail 282
Tordino Radiator
Horizontal 248, 250
Trent Radiator
Vertical 218
Tuinstall Mirror Radiator 149
Tunstall Double Radiator
Horizontal 146
Vertical 144
Tunstall Double Towel Rail 148
Tunstall Radiator
Horizontal 142
Vertical 140
Tunstall Towel Rail 143
Tuscan
Ladder Rail 54
Round 58
Square 64
Square Multirail 62
Twyver Towel Rail 285

V

Velino Towel Rail
Brushed 89
Polished 89
Vent Caps 357
Vesima Radiator
Horizontal 262
Vertical 260
Violla II Radiator
Brushed 87
Polished 86

W

Warrington Radiator
Type 10
Horizontal 92
Vertical 93, 94, 95
Type 20
Horizontal 96
Vertical 97, 98
Wendover Stainless Steel Towel Rail
Straight
Brushed 83, 85
Polished 82, 84
Wendover Towel Rail
Curved
Chrome 18
Gloss White 21
Straight
Black Gold 29
Brushed Brass 26
Brushed Bronze 29
Brushed Gunmetal 29
Chrome 16
Gloss White 20
Matt Anthracite 22
Matt Black 24
Westward Towel Rail 50
Windrush Towel Rail 278
Wingrave Flat Panel 138
Wingrave Towel Rail
Curved
Chrome 34, 46
Gloss White 47
Straight
Gloss White 36
Matt Anthracite 40
Matt Black 42
Matt Cobalt Blue 45
Matt Grey 44
Matt White 38
Withington Radiator
Horizontal 236
Vertical 234
Witney Radiator
Horizontal 275
Vertical 274

Eastbrook Co Terms & Conditions

We deliver all goods on our own dedicated transport fleet to ensure a speedy and problem-free service, however, in the unlikely event that goods are delivered wrong or damaged, it is the responsibility of the customer to ensure sufficient time is allowed for a replacement to be sent.

1. DEFINITIONS

In these terms and conditions, the following words shall have the following meanings:
'Buyer'
shall mean any person, Eastbrook or company, to whom Eastbrook supplies Goods or Services or with whom Eastbrook enters into negotiations for the supply of Goods or Services.
'Eastbrook'
shall mean Brian Michael Doouss and Nicolas Brian Doouss (each a "Partner" together the "Partners") trading as "Eastbrook Co." or "Woodstock".
'Goods'
shall mean products, articles or things which are supplied by or which are the subject of negotiations for supply by Eastbrook to the Buyer.
'Services'
shall mean services are supplied by or which are the subject of negotiations/ or supply by Eastbrook to the Buyer.

2. MAKING THE CONTRACT

2.1
Eastbrook's salesmen are not authorised representatives and are not authorised to accept confirm or vary any order nor to make any representation or promise on Eastbrook's behalf
2.2
Any estimate/quotation which comprises an invitation to treat is open for a period of 30 days only from the date thereof, provided that Eastbrook has not previously withdrawn it. Any order issued by the Buyer is subject to acceptance by Eastbrook and a contract will only be formed when Eastbrook has accepted the Buyer's offer to buy in writing. Any offer made by the Buyer must be confirmed in writing by the Buyer.
2.3
All orders are placed under these terms and conditions alone.
2.4
These terms and conditions exclude any other terms and conditions inconsistent therewith which a Buyer might seek to impose even though such other terms and conditions may be submitted in a later document and/or purport to exclude or supersede any terms or conditions with them or may be contained in any offer acceptance or counter-offer made by the Buyer.
2.5
No variation of these terms and conditions is permitted unless expressly accepted by a Partner of Eastbrook in writing.

3. CANCELLATION

3.1
No cancellation by the Buyer is permitted except where expressly agreed by a Partner of Eastbrook in writing.
3.2
The Buyer will in the event of agreed cancellation by the Buyer indemnify Eastbrook fully against all expenses incurred up to the time of such cancellation together with by way of liquidated damages a sum of 33 1/3% of the contract price which shall be paid by the Buyer to Eastbrook Forthwith.

4. PRICE

4.1
All prices quoted are those ruling at the date of dispatch or supply.
4.2
Unless otherwise stated all prices quoted are nett, exclusive of VAT, and in the case of Goods ex works.
4.3
Eastbrook reserves the right at any time prior to delivery of the Goods or supply of Services to adjust the price to take account of any increase in the cost of raw materials, labour or services or any currency fluctuations affecting the cost of imported materials or services.

5. TERMS OF PAYMENT

5.1
All sums become due and payable under these terms and conditions not later than 14 days from date of invoice.
5.2
Time for payment shall be of the essence.
5.3
The Buyer shall have no right to set off, statutory or otherwise.
5.4
If the Buyer (being a Company) has a petition for its winding-up or passes a resolution for voluntary winding-up otherwise than for the purpose of a bona fide amalgamation or reconstruction or compounds with its creditors or has a receiver appointed or all or any part of its assets or (being an individual) becomes bankrupt or insolvent or enters into any arrangement with its creditors or commits a material or serious breach of this Agreement (and in the case of such a breach being remediable fails to remedy it within 7 days of receiving notice to do so)' he will be deemed to have repudiated the Contract.
5.5
Eastbrook reserves the right at any time at its discretion to demand security for payment before continuing with or delivering any Order, supplying any Goods or Services.

6. DELIVERY

6.1
Delivery will be deemed to have been effected when the Goods are ready for collection at the premises of Eastbrook or as the case may be the premises of the suppliers to Eastbrook in circumstances where the Goods are delivered direct from such suppliers.
6.2
Time of delivery is not of the essence.
6.3
Eastbrook shall not be liable for any loss whatsoever or howsoever arising caused by its non-delivery or by the failure to make Goods ready for collection on the due date.
6.4
Eastbrook reserves the right to make delivery by instalments and to tender a separate invoice in respect of each instalment.
6.5
When delivery is to be by instalments or Eastbrook exercises its right to deliver by instalments under clause 6.4 hereof or if there be delay in the delivery of any one or more instalments for whatever reason this will not entitle the Buyer to treat the contract as repudiated and/or to damages.
6.6
Deviations in quantity between the Goods delivered and Goods ordered representing not more than 10 per cent by value shall not give the Buyer any right to reject the Goods or to claim damages and the Buyer shall be obliged to accept and pay at the contract rate for the quantity of the Goods delivered.

7. SUPPLY OF SERVICES

7.1
Time for the supply of Services is not of the essence.
7.2
Eastbrook shall not be liable for any loss whatsoever or howsoever arising caused by its failure to supply Services or any part thereof on the due date.
7.3
Eastbrook reserves the right to supply Services by instalments and to tender a separate invoice in respect of each instalment.
7.4
When the supply of Services is to be by instalments or Eastbrook exercises its right to supply Services by instalments under clause 7.3 hereof or if there be a delay in the supply of any one or more instalments of Services for whatever reason this will not entitle the Buyer to treat the contract as repudiated or to damages.
7.5
Deviation in the quantity between Services supplied and the Services ordered representing not more than 10 per cent by value shall not give the Buyer any right to reject the Services or to claim damages and the Buyer shall be obliged to accept and pay at the contract rate for the quantity of the Services supplied.

8. RISK AND THE PASSING OF PROPERTY IN GOODS

8.1
Risk in the Goods shall pass to the Buyer when the Goods are delivered.
8.2
Notwithstanding risk in the Goods passing in accordance with clause 8.1 hereof title in the Goods shall not pass to the Buyer until whichever shall be the first to occur of the following:-
8.2.1
payment being received by Eastbrook for the Goods and Services and no other amounts then being outstanding from the Buyer to Eastbrook in respect of other Goods or Services supplied by Eastbrook
8.2.2
the Buyer selling the Goods in accordance with the provisions of these terms and conditions in which case title to the Goods shall be deemed to have passed to the Buyer immediately prior to delivery of the Goods to the Buyer's customers; and

8.2.3
Eastbrook waiving its rights under this clause 8.2 in respect of specified Goods or Services whereupon title to the said Goods shall forthwith vest in the Buyer.
8.3
The Buyer is licensed by Eastbrook to use or to agree to sell the Goods delivered to the Buyer subject to the express condition that the entire proceeds of any sale are held in trust for Eastbrook and are not mixed with other moneys or paid into an overdrawn bank account and shall at all times be identifiable as Eastbrook's moneys.
8.4 Until title to the Goods passes:
8.4.1 The Buyer will hold the Goods as fiduciary agent and bailee for Eastbrook;
8.4.2
the Goods shall, subject to clause 8.3, be kept separate and distinct from all other property of the Buyer and of third parties and in good and substantial repair and condition and be stored in such a way as to be clearly identifiable as belonging to Eastbrook;
8.4.3
Eastbrook may at any time revoke the power of sale and use contained in clause 8.3 by notice to the Buyer if the Buyer is in default for longer than 14 days in the payment of any sum whatsoever due to Eastbrook (whether in respect of the Goods or any other Goods or Services supplied at any time by it to the Buyer) or if Eastbrook has bona fide doubts as to the solvency of the Buyer;
8.4.4
The Buyer's power of sale and use contained in clause 8.3 shall automatically cease if the Buyer has a petition presented for its winding-up or passes a resolution for voluntary winding-up otherwise than for the purpose of a bona fide amalgamation or reconstruction or compounds with its creditors or has a receiver appointed of all or any part of its assets or becomes bankrupts or insolvent or enters into any arrangements with creditors or takes or suffers any similar action in consequence of debts or carries out or undergoes any analogues act or proceeding under foreign law;
8.4.5
upon determination of the Buyer's power of sale and use pursuant to clause 8.4.3 or clause 8.4.4. the Buyer shall place any of the Goods in its possession or under its control and unsold at the disposal of Eastbrook and Eastbrook shall be entitled to enter upon any premises of the Buyer for the purpose of removing such Goods.
8.5
Eastbrook shall at any time be entitled to appropriate any payments made by the Buyer in respect of any Goods or Services in settlement of such invoices or accounts in respect of such Goods or Services as Eastbrook may in its absolute discretion think fit notwithstanding any purported appropriation to the contrary by the Buyer.

9. LIEN AND STOPPAGE

9.1
Until such time as the title in the Goods has passed to the Buyer Eastbrook has the right to withhold delivery if the Buyer (being a Company) has a petition presented for its winding-up or passes a resolution for voluntary winding-up otherwise than for the purpose of a bona fide amalgamation or reconstruction or compounds with its creditors or has a receiver appointed of all or any part of its assets or (being an individual) becomes bankrupt or insolvent or enters into any arrangements with creditors or takes or suffers any similar action in consequence of debts or carries out or undergoes any analogous act or proceedings under foreign law.
9.2
When the title in the Goods has passed to the Buyer and the time for payment has falled due but payment has not been made or if the Buyer (being a Company) has a petition presented for its winding-up or passes a resolution for voluntary winding-up otherwise than for the purposes of a bona fide amalgamation or reconstruction or compounds with its creditors or has a receiver appointed of all or any part of its assets or (being an individual) becomes bankrupt or insolvent or enters into any arrangements with creditors or takes or suffers any similar action in consequence of debts or carries out or undergoes any analogous act or proceedings under foreign law Eastbrook has
9.2.1 a lien on the Goods so long as Eastbrook is in possession of them
9.2.2 a right of stoppage in transit
9.2.3 a right of resale
9.3
For the avoidance of doubt it is hereby declared that nothing in this clause shall affect the rights given to Eastbrook by ss.38-48 of the Sale of Goods Act 1979.

10. INSPECTION/SHORTAGES

10.1
The Buyer is under a duty to inspect the Goods forthwith on delivery and satisfy himself as to the due performance of Services forthwith after supply.
10.2
Eastbrook shall be under no liability for any defects or shortages that would be apparent on careful inspection if the terms of this clause are not complied with, and, in any event will be under no liability if a written complaint is not delivered to Eastbrook within 7 days of delivery or supply detailing the alleged detect or shortage.
10.3
In all cases where defects or shortages in respect of Goods are complained of Eastbrook shall be under no liability in respect thereof unless an opportunity to inspect the Goods is given to Eastbrook before any use is made thereof or any alteration or modification is made thereto by the Buyer.
10.4
Subject to clauses 10.2 and 10.3 Eastbrook shall make good any defect or shortage in the Goods and where appropriate replace any Goods damaged in transit as soon as it is reasonably able to do so, but otherwise shall be under no liability whatsoever or howsoever arising from such defect, shortage or damage.
10.5
Subject to clause 10.4 Eastbrook shall remedy any defect in the supply of Services as soon as it is reasonably able to do so but otherwise shall be under no liability whatsoever or howsoever arising from such defect

11. WARRANTY

11.1
No representation or warranty is given as to the suitability or fitness of the Goods or Services for any particular purpose and the Buyer shall satisfy himself in this respect and shall be totally responsible therefore
11.2
If the Goods are in such a state or the Services so defectively supplied as would but for this condition entitle the Buyer to repudiate the contract and/ or claim damages from Eastbrook Eastbrook reserves the right to repair or replace the Goods or perform the Services (or the relevant part thereof) again.

12. LIABILITY

12.1 Introduction
12.1.1
Nothing in this clause 12 shall be deemed to exclude or restrict Eastbrook's liability for death or personal injury resulting from Eastbrook's negligence.
12.1.2
Each of the sub-clauses in this clause 12 is to be treated as separate and independent.
12.1.3
Eastbrook is willing to undertake liability additional to that provided by this clause 12 in exchange for a higher price.
12.2 Exclusion
12.2.1
Eastbrook agrees that if any defect caused by faulty design, manufacture, materials or workmanship is discovered during the period of 3 months commencing with the date of delivery or supply, Eastbrook will remedy any defect at its own expense or, in the case of Goods if it chooses to do so, replace them. Defects caused by abnormal use, misuse, neglect or wilful or accidental damage are not covered by this clause.
12.2.2 The Buyer cannot claim the benefit of clause 12.2.1 above unless:
-
he informs Eastbrook of the relevant defect in writing within 7 working days of discovering it; and
-
in the case of Goods, he returns the Goods to Eastbrook at his own expense.
12.2.3
The risk of accidental loss whilst any Goods are being returned to Eastbrook will be borne by the Buyer.

12.2.4
Notwithstanding clause 12.2.1 above, if the manufacturer of any Goods has provided any guarantee of such Goods for a period longer than three months (a "Manufacturer's Extended Guarantee"), Eastbrook shall use its reasonable endeavours to transfer to the Buyer the benefit of any such Manufacturer's Extended Guarantee in respect of the Goods, provided that Eastbrook may in its absolute discretion elect to do so only at the cost of the Buyer.
12.2.5
Any Manufacturer's Extended Guarantee is for the Buyer only who must complete a return and registration form within 30 days of purchase. Manufacturer's Extended Guarantees are not transferable to third parties and do not cover previously installed products such as ex showroom displays. Failure to complete and return a registration form to Eastbrook within the 30 day period will result in the guarantee on such Goods being limited to that stated in clause 12.2.1 above.
12.2.6
Manufacturer's Extended Guarantees cover Goods which are used for normal domestic use only and are not applicable to Goods which are used for commercial use (i.e. hotels, residential homes, leisure facilities etc.).
12.2.7
In the event that a manufacturer of Goods providing a Manufacturer's Extended Guarantee pursuant to clause 12.2.3 above ceases trading and/ or no longer honours such guarantee, Eastbrook shall have no liability whatsoever to the Buyer with respect to such Manufacturer's Extended Guarantee.
12.2.8
If the benefit of a Manufacturer's Extended Guarantee is transferred to the Buyer, subject always to clause 12.2.1 above and further subject to the defect not being as a result of fair wear and tear, Eastbrook shall only be liable to provide replacement parts. For the avoidance of doubt, Eastbrook excludes any consequential costs involved in the fitting of such parts. Furthermore, with respect to the following these additional terms are applicable:

Perishable components such as non-glass or metallic parts (e.g. plastic parts, seals, wheels etc.) are excluded from a Manufacturer's Extended Guarantee.

Shower and bath screens: Glass and seals for such products are excluded from a Manufacturer's Extended Guarantee.

Towel rails and radiators: Such products must be individually earthed when installed for a Manufacturer's Extended Guarantee to apply.
12.2.9
If, in the sole opinion of Eastbrook, the Goods which are the subject of the Manufacturer's Extended Guarantee have been modified, misused or neglected or have been wilfully or accidentally damaged, Eastbrook shall not be liable under the Manufacturer's Extended Guarantee for the failure of the Goods.
12.2.10
No claim under a Manufacturer's Extended Guarantee will be accepted if Goods have been installed with a fault that would have been clearly visible before installation. A Manufacturer's Extended Guarantee does not cover any Goods which have been modified, altered, transformed or relocated in any way.
12.2.11
Claims under a Manufacturer's Extended Guarantee must be made by the Buyer within [7 working days] of the defect being discovered.
12.2.12
In consideration for receiving the benefit of this clause, the Buyer agrees that, apart from those terms set out in clause 10 and 11, all other terms, whether conditions, warranties or innominate terms, express or implied, statutory or otherwise, are excluded from the contract between Eastbrook and the Buyer to the extent permitted by law (except where the Buyer deals as consumer within section 12 of the Unfair Contract Terms Act 1977 when the terms implied by sections 13, 14 and 15 of the Sale of Goods Act 1979 shall be implied into the contract).
12.3 Exclusion of Consequential Loss

Eastbrook shall not be liable for any consequential or indirect loss suffered by the Buyer whether such loss arises from breach of a duty in contract or tort or in any other way (including loss arising from Eastbrook's negligence) including, without limitation to the generality of the foregoing:
- loss of profits;
- loss of contracts;
- damage to property of the Buyer or anyone else; or
-
personal injury to the Buyer or anyone else (except so far as such injury is attributable to Eastbrook's negligence).
12.4Limitation
Eastbrook's total liability for any one claim or for the total of all claims arising from any one act or default of Eastbrook (whether arising from Eastbrook's negligence or otherwise) shall not exceed the contract price of the Goods.

13. FORCE MAJEURE

13.1
Eastbrook shall not be liable for any failure to deliver the Goods or perform the Services arising from circumstances outside Eastbrook's control.
13.2
Non-exhaustive illustrations of such circumstances would be act of God, war, riot, explosion, abnormal weather conditions, fire, flood, strikes, lockouts, Government action or regulations (UK or otherwise), delay by suppliers, accidents and shortage of materials, labour or manufacturing facilities.
13.3
Should Eastbrook be prevented from delivering the Goods or performing the Services in the above circumstances, it shall give the Buyer written notice of this fact as soon as reasonably practicable after discovering it.
13.4
If the circumstances preventing delivery of the Goods or performing the Services are still continuing three months after the Buyer receives Eastbrook's notice, then either party may give written notice to the other cancelling the contract.
13.5
If the contract is cancelled in this way, Eastbrook will refund any payment which the Buyer has already made on account of the price (subject to deduction of any amount Eastbrook is entitled to claim from the Buyer) but Eastbrook will not be liable to compensate the Buyer for any further loss or damage caused by the failure to deliver the Goods or perform the Services.

14. SALES PROMOTION DOCUMENTATION

Whilst Eastbrook takes every precaution in the preparation of its catalogue, technical circulars, price lists and its other literature, these documents are for the Buyer's general guidance only and the particulars contained therein shall not constitute representations by Eastbrook and Eastbrook shall not be bound thereby.

15. USE OF DATA

15.1
If the Buyer provides any data relating to the business of the Buyer to Eastbrook for any purpose, then the Buyer agrees that Eastbrook may hold such data and use it in relation to the supply of Goods, to process payment and to inform the Buyer (including all its staff) of other Goods or Services that Eastbrook may offer from time to time. Eastbrook will hold all data relating to the Buyer in accordance with our privacy policy and privacy statements in force from time to time and which is available on demand.

15.2
The Buyer agrees that Eastbrook may share any data referred to in clause 15.1 with third parties only where it is necessary for the provision of the Goods or Services supplied by Eastbrook and further that the Buyer shall hold Eastbrook harmless for the misuse of such data by those third parties.
15.3
In relation to any data supplied by the Buyer to Eastbrook regarding the Buyer's customers, the Buyer warrants and represents that they have obtained consent to share such data with Eastbrook (whether this relates to remedial services or the replacement of Goods or otherwise) and the Buyer agrees to indemnify and keep indemnified, Eastbrook from and against any losses, damages, liability, costs (including legal fees) and expenses incurred by Eastbrook as a result of or in connection with the Buyers breach of this Clause.

16. NOTICES

Any notice to be given hereunder shall be in writing and shall be deemed to have been duly given if sent or delivered to the party concerned at its address specified overleaf or such other address as that party may from time to time notify in writing and shall be deemed to have been served, if sent by post, 48 hours after posting.

17. ASSIGNMENT

Neither Eastbrook nor the Buyer shall assign or purport to assign or transfer the contract or the benefits thereof to any other person without prior written consent of the other.

18. SEVERANCE

18.1
If any provision of this contract (or part of any provision) is or becomes illegal, invalid or unenforceable, the legality, validity and enforceability of any other provision of the Contract shall not be affected.
18.2
If any provision of the contract (or part of any provision) is or becomes illegal, invalid or unenforceable but would be legal, valid and enforceable if some part of it was deleted or modified, the provision or part-provision in question shall apply with such deletions or modifications as may be necessary to make the provision legal, valid and enforceable. In the event of such deletion or modification, the parties shall negotiate in good faith in order to agree the terms of a mutually acceptable alternative provision.

19. PROPER LAW AND JURISDICTION

The Contract shall be governed by and construed in accordance with English law and all disputes arising in connection with the contract shall be submitted to the jurisdiction of the English Courts.

20. HEADINGS

The headings of these conditions are for convenience only and shall have no effect on the interpretation thereof.

heating collection

ISSUE 51 | MAY - SEPT 2026

Eastbrook

Eastbrook Co

Eastbrook Road,
Gloucester GL4 3DB
Tel: 01452 317800

www.eastbrooktrade.com

Contact Us

For Orders Only:
orders@eastbrookco.com

For Technical Enquiries:
technical@eastbrookco.com

For Sales / Enquiries:
sales@eastbrookco.com

Also Available

Issue 51 - Volume 1
Bathroom Brochure

Explore our baths, vanity units, toilets, showers, and more—everything for a stylish, practical bathroom.